* This publication supersedes TM 9-2320-260-34-1, TM 9-2320-260-34-2-1, TM 9-2320-260-34-2-2, TM 9-2320-260-34-2-3, TM 9-2320-260-34-2-4, and TM 9-2320-260-34-2-5, 31 December 1980, for M809 series vehicles.

TECHNICAL MANUAL

VOLUME 1 OF 2

DIRECT SUPPORT AND GENERAL SUPPORT MAINTENANCE FOR 5-TON, 6X6, M809 SERIES TRUCKS (DIESEL)

TRUCK, CARGO: 5-TON, 6X6,
M813 (2320-00-050-8902) (EIC:BSB);
(2320-00-050-8890) (EIC:BSA)
M813A1 (2320-00-050-891 3) (EIC: BSD);
(2320-00-050-8905) (EIC:BSC)
M814 (2320-00-050-8988) (EIC:BSK);
(2320-00-050-8987) (EIC:BSJ)

TRUCK, BOLSTER, LOGGING: 5-TON, 6X6
M815 (2320-00-050-8927) (EIC:BSE)

TRUCK, WRECKER, MEDIUM: 5-TON, 6X6
M816 (2320-00-05 1-0489) (EIC:BSQ)

TRUCK, DUMP: 5-TON, 6X6
M817 (2320-00-050-8970) (EIC:BSF);
(2320-00-05 1-0589) (EIC:BSR)

TRUCK, TRACTOR: 5-TON, 6X6
M818 (2320-00-050-8984) (EIC:BSH);
(2320-00-050-8978) (EIC:BSG)

TRUCK, TRACTOR, WRECKER: 5-TON, 6X6
M819 (2320-00-050-9004) (EIC:BSL)

TRUCK, VAN, EXPANSIBLE: 5-TON, 6X6
M820 (2320-00-050-9006) (EIC:BSM)
M820A1 (2320-00-050-9007)
M820A2 (2320-00-050-9010) (EIC:BSN)

TRUCK, STAKE, BRIDGE TRANSPORTING: 5-TON, 6X6
M821 (2320-00-050-9015) (EIC:BSP)

DISTRIBUTION STATEMENT A. Approved for public release: distribution is unlimited.

HOW TO USE THIS MANUAL v
INTRODUCTION 1-1
SERVICE AND TROUBLESHOOTING INSTRUCTIONS 2-1
ENGINE MAINTENANCE 3-1
CLUTCH SYSTEM MAINTENANCE 4-1
FUEL SYSTEM MAINTENANCE 5-1
COOLING SYSTEM MAINTENANCE 6-1
ELECTRICAL SYSTEM MAINTENANCE 7-1
TRANSMISSION MAINTENANCE 8-1
TRANSFER SYSTEM MAINTENANCE 9-1
AXLES AND SUSPENSION MAINTENANCE 10-1
COMPRESSED AIR AND BRAKE SYSTEMS MAINTENANCE 11-1

HEADQUARTERS, DEPARTMENT OF THE ARMY JULY 1994

WARNING

EXHAUST GASES CAN KILL

1. DO NOT operate your vehicle engine in enclosed area.
2. DO NOT idle vehicle engine with cab windows closed.
3. DO NOT drive vehicle with inspection plates or cover plates removed.
4. BE ALERT at all times for exhaust odors.
5. BE ALERT for exhaust poisoning symptoms. They are:
   - Headache
   - Dizziness
   - Sleepiness
   - Loss of muscular control
6. If YOU SEE another person with exhaust poisoning symptoms:
   - Remove person from area
   - Expose to open air
   - Keep person warm
   - Do not permit person to move
   - Administer artificial respiration, if necessary*

   * For artificial respiration, refer to FM 21-11

WARNING SUMMARY

- Do not operate a deadlined vehicle without preliminary inspection. Failure to do so may cause further damage to a disabled component and possible injury to personnel.
- Hearing protection is required for driver, co-driver, and mechanic when engine is running. Noise levels produced by this vehicle exceed 85dB, which may cause injury to personnel.
- Ensure fuel shutoff valve is off and remove throttle cable before cranking engine. Failure to do so may result in injury to personnel.
- Diesel fuel is flammable. Do not perform troubleshooting checks near open flame, sparks, or electricity. Injury to personnel may result.
- Eye protection is required when performing fuel system troubleshooting checks. Failure to wear eye protection may result in injury to personnel.
- Ignition switch must remain off and battery ground cable disconnected during fuel system troubleshooting checks except when necessary to perform malfunction check. Failure to turn ignition system off and disconnect battery ground cable may result in injury to personnel.
- Hot coolant is under pressure. Care should be used when removing coolant filler cap or inspecting hot engine coolant leaks. Steam or hot coolant under pressure may cause severe injury to personnel.

WARNING SUMMARY (Contd)

- Wear hand protection at all times when working with heated parts. Failure to do so may result in injury to personnel.
- Overhead lifting device capacity must exceed dump body weight. A shifting, swinging, or falling load may cause injury to personnel. Overhead lifting device must remain attached to dump body until trouble-shooting is completed. Released dump body may fall and may cause injury to personnel.
- Use properly rated hydraulic hose when performing hydraulic systems checks on vehicles not equipped with dump body lock. Failure to do this may result in injury to personnel.
- Bleed hydraulic pressure before cracking hydraulic lines. Failure to do so may result in damage to equipment and injury to personnel.
- All personnel must stand clear of dump body during lowering test. Falling dump body may cause injury to personnel.
- All personnel must stand clear during lifting operations. A swinging or shifting load may cause injury to personnel.
- Compressed air source will not exceed 30 psi (207 kPa). When cleaning with compressed air, eyeshields must be worn. Failure to wear eyeshields may result in injury to personnel.
- Improper cleaning methods and use of unauthorized cleaning solvents may injure personnel and damage equipment. Refer to TM 9-247 for correct information.
- Drycleaning solvent is flammable and will not be used near open flame. Use only in well-ventilated places. Failure to do so may result in injury to personnel.
- Do not use compressed air or a dry brush for cleaning when working in areas of vehicle where asbestos brake lining dust may accumulate. Remove asbestos dust and other residue from these areas using a soft bristle brush or cloth soaked with water. Breathing asbestos dust may cause injury to personnel.
- Do not disconnect air lines before draining air reservoirs. Small parts under pressure may shoot out with high velocity, causing injury to personnel.
- Lifting device and transmission lifting jack must have a weight capacity greater than the weight of the transmission to prevent damage to equipment and injury to personnel.
- Diesel fuel is flammable. Do not perform fuel system procedures near open flame. Injury to personnel may result.
- Test stand must be shut off before changing shims in spring pack. Small parts under pressure may shoot out causing injury to personnel or damage to equipment.
- Use prybar to free transfer from hang-ups or snags. Failure to do so may result in injury to personnel.
- Ensure transfer is securely mounted to jack with safety chain or strap. Failure to do so may result in injury to personnel.
- Transfer is heavy and bulky. Allow adequate clearance to remove transfer from vehicle. Failure to do so may result in injury or death to personnel.
- Weight of vehicle must be supported on jack stands at all times. Do not attempt to support weight of vehicle on hydraulic jack. Injury or death to personnel may result if jack fails.
- Eye protection is required when using wire brush for cleaning. Failure to do this may result in injury to personnel.
- Unloader valve assembly must be held down during removal. Small parts under pressure may shoot out, causing injury to personnel.

WARNING SUMMARY (Contd)

- Do not detach chain from engine until all engine weight is evenly distributed and engine is stable on transport stand.
- Eye protection is required when removing hydraulic lines. Failure to do so may result in injury to personnel.
- Eyeshields must be worn during grinding operations. Failure to wear eyeshields may result in injury to personnel.
- If task is being performed in vehicle, ensure fuel shutoff valve is in OFF position and battery ground cable is disconnected to prevent engine from starting. Failure to do this may result in injury to personnel.
- Use care when removing fan blade. Failure to do so may cause injury to personnel.
- Do not touch hot exhaust system components with bare hands. Injury to personnel may result.
- Do not use hands to free engine of “hang-ups.” Use tanker or prybars. Failure to do so may result in injury to personnel.
- Engine container is pressurized. Ensure pressure is released before opening container. Failure to do so may result in injury to personnel.
- Ensure engine compartment is free of all tools and working materials before starting engine. Failure to do so may result in injury to personnel.
- Flywheel is heavy. Use care when installing flywheel. Failure to do so may result in injury to personnel.
- Keep hands away from spray pattern when fuel is forced from injector spray holes. Failure to do so may result in injury to personnel.

TECHNICAL MANUAL
NO. 9-2320-260-34-1

TECHNICAL ORDER
NO. 36A12-1C-1122-1

HEADQUARTERS
DEPARTMENT OF THE ARMY
Washington D. C., 25 *July 1994*

TECHNICAL MANUAL

VOLUME 1 OF 2

DIRECT SUPPORT AND GENERAL SUPPORT MAINTENANCE

FOR

5-TON, 6X6, M809 SERIES TRUCKS

(DIESEL)

Model		NSN Without Winch	(EIC)	NSN With Winch	(EIC)
Truck, Cargo	M813	2320-00-050-8902	(BSB)	2320-00-050-8890	(BSA)
	M813A1	2320-00-050-8913	(BSD)	2320-00-050-8905	(BSC)
	M814	2320-00-050-8988	(BSK)	2320-00-050-8987	(BSJ)
Truck, Bolster, Logging	M815			2320-00-050-8927	(BSE)
Truck, Wrecker, Medium	M816			2320-00-051-0489	(BSQ)
Truck, Dump	M817	2320-00-050-8970	(BSF)	2320-00-051-0589	(BSR)
Truck, Tractor	M818	2320-00-050-8984	(BSH)	2320-00-050-8978	(BSG)
Truck, Tractor, Wrecker	M819			2320-00-050-9004	(BSL)
Truck, Van, Expansible	M820	2320-00-050-9006	(BSM)		
	M820A1	2320-00-050-9007			
	M820A2	2320-00-050-9010	(BSN)		
Truck, Stake, Bridge Transporting	M821			2320-00-050-9015	(BSP)

This manual is published in two parts. TM 9-2320-260-34-1 contains Chapters 1 through 11, and TM 9-2320-260-34-2 contains Chapters 12 through 17 and Appendices A, B, C, D, E, and F.

This manual contains a table of contents and an alphabetized index for Chapters 1 through 11.

* This publication supersedes TM 9-2320-260-34-1, TM 9-2320-260-34-2-1, TM 9-2320-260-34-2-2, TM 9-2320-260-34-2-3, TM 9-2320-260-34-2-4, and TM 9-2320-260-34-2-5, dated 31 December 1980, for M809 series vehicles.

DISTRIBUTION STATEMENT A, Approved for public release; distribution is unlimited.

REPORTING OF ERRORS

You can help improve this manual. If you find any mistakes or if you know of a way to improve the procedures, please let us know. Mail your letter, DA Form 2028 (Recommended Changes to Publications and Blank Forms), or DA Form 2028-2, located in back of this manual, direct to: Commander, U.S. Army Tank-Automotive Command, ATTN: AMSTA-MB, Warren, Michigan 48397-5000. A reply will be furnished to you.

TABLE OF CONTENTS
VOLUME 1 OF 2

		Page
	HOW TO USE THIS MANUAL	v
CHAPTER 1	INTRODUCTION	1-1
Section I.	General Information,	1-1
II.	Equipment Description and Data	1-2
CHAPTER 2	SERVICE AND TROUBLESHOOTING INSTRUCTIONS	2-1
Section I.	Repair Parts, Special Tools, Test, Measurement, and Diagnostic Equipment (TMDE), and Support Equipment	2-1
II.	Troubleshooting	2-1
III.	General Maintenance Instructions	2-32
CHAPTER 3	ENGINE MAINTENANCE	3-1
Section I.	Description and Data	3-1
II.	Engine (In-Vehicle) Maintenance.	3-5
III.	Engine Replacement	3-76
IV.	Engine Disassembly Into Subassemblies	3-107
V.	Engine Repair	3-136
VI.	Engine Assembly From Subassemblies	3-177
VII.	Engine Valve and Injector Maintenance	3-216
CHAPTER 4	CLUTCH MAINTENANCE	4-1
CHAPTER 5	FUEL SYSTEM MAINTENANCE	5-1
Section I.	Description and Data	5-1
II.	Fuel Injector Maintenance	!5-3
III.	Fuel Pump Maintenance	5-37
CHAPTER 6	COOLING SYSTEM MAINTENANCE	6-1
CHAPTER 7	ELECTRICAL SYSTEM MAINTENANCE	7-1
Section I.	Description and Data	7-1
II.	WiringHarness Replacement	7-2

CHAPTER 8 TRANSMISSION MAINTENANCE 8-1

CHAPTER 9 TRANSFER SYSTEM MAINTENANCE 9-1

CHAPTER 10 AXLES AND SUSPENSION MAINTENANCE 10-1

Section I. Front Axle Maintenance 10-1

II. Rear Axle and Suspension Maintenance 10-16

III. Differential Maintenance 10-18

CHAPTER 11 COMPRESSED AIR AND BRAKE SYSTEMS MAINTENANCE 11-1

Section I. Description and Data 11-1

II. Air Compressor and Service Brake Maintenance 11-3

III. Air-Hydraulic System Maintenance 11-30

VOLUME 2 OF 2

CHAPTER 12 STEERING SYSTEM MAINTENANCE 12-1

Section I. Mechanical and Power Steering System Maintenance 12-1

II. Tire Maintenance 12-18

CHAPTER 13 FRAME MAINTENANCE 13-1

CHAPTER 14 BODY, HOOD, AND CAB MAINTENANCE 14-1

CHAPTER 15 SPECIAL PURPOSE BODIES MAINTENANCE 15-1

Section I. Cargo Body Maintenance 15-1

II. Wrecker Body Maintenance 15-8

III. Tractor Wrecker Body Maintenance 15-13

IV. Dump Body Maintenance 15-24

V. Van Body Maintenance 15-70

VI. Van Body Electrical Components Replacement 15-239

CHAPTER 16 WINCH AND POWER TAKEOFF MAINTENANCE 16-1

Section I. Front Winch Maintenance 16-1

II. Rear Winch Maintenance 16-44

III. Crane and Hoist Maintenance 16-76

IV. Transmission Power Takeoff Maintenance 16-230

V. Transfer Case Power Takeoff Maintenance 16-250

VI. Power Divider and Drive Assembly Maintenance 16-270

CHAPTER 17 SPECIAL PURPOSE KITS MAINTENANCE 17-1

Section I. Winterization Kits Maintenance 17-3

II. Air Conditioner Kit Maintenance 17-36

APPENDIX PREFERENCES A-1
APPENDIX B COMMON AND SPECIAL TOOLS LIST B-1
APPENDIX C EXPENDABLE/DURABLE SUPPLIES AND MATERIALS LIST C-1
APPENDIX D MANDATORY REPLACEMENT PARTS D-1
Section I. Introduction . . . . . D-l
II. Mandatory Replacement Parts D-2
APPENDIX E ILLUSTRATED LIST OF MANUFACTURED ITEMS E-1
APPENDIX F TORQUE LIMITS F-1
INDEX . . . . . Index 1

HOW TO USE THIS MANUAL

ABOUT YOUR MANUAL

Spend some time looking through this manual. You'll find that it has a new look, different than most of the TM's you've been using.

New features added to improve the convenience of this manual and increase your efficiency are:

a. Accessing Information - These include features such as the bleed-to-edge locators on the cover and edge of the manual. Extensive troubleshooting guides for specific systems lead directly to step-by-step directions for problem solving and maintenance tasks.

b. Illustrations - A variety of methods are used to make locating and fixing components much easier. Locator illustrations with keyed text, exploded views, and cut-away diagrams make the information in this manual easier to understand and follow.

c. Keying Text With Illustrations - Illustrations/text are located on facing pages that show the specific task you are working on. In some cases, the task steps and illustrations are located side by side. Continue reading for an example of modular text and illustrations.

d. General Features - Your TM is the best source available for providing information and data critical to vehicle operation and maintenance:

- Safety warning summary (pages a through c)
- General information, equipment descriptions, and data (Chapter 1)
- Mechanical troubleshooting (Chapter 2, Section II)
- Detailed maintenance procedures (Chapters 3 through 17)
- References (Appendix A)
- Common and special tools list (Appendix B)
- Expendable/durable supplies and materials list (Appendix C)
- Mandatory replacement parts (Appendix D)
- Illustrated list of manufactured items (Appendix E)
- Torque limits (Appendix F)

A typical example of how to use this manual is provided on the following pages.

USING YOUR MANUAL: AN EXAMPLE

TASK: The direct and general support maintenance mechanic of an M809 series vehicle reports that the engine will not crank. The vehicle has been assigned to you for repair.

TROUBLESHOOTING STEPS:

1. Look at the cover of this manual. You'll see chapter/section titles listed from top to bottom on the right-hand side.
2. Look at the right edge of the manual. On some of the pages you'll see edge indicators (black bars) that are alined with the chapter/section bars on the cover. These are the locations of the chapters/sections in the text.
3. Look for "SERVICE AND TROUBLE-SHOOTING INSTRUCTIONS" in the chapter list on the cover. This is where the troubleshooting information is located.
4. Turn to those pages with the edge indicator matching the black bar for service and troubleshooting instructions. Page numbers are also listed next to chapter/section titles.
5. One of the first pages having service and troubleshooting instructions edge indicators is the "MECHANICAL TROUBLESHOOTING INDEX."
6. Look down the list until you find "ENGINE." Beneath that heading you will find the symptoms noted by the maintenance mechanic: "Engine will not crank."
7. Turn to the page indicated: 2-5.
8. On page 2-5, steps/tests relating to resolving the problem of "Engine will not crank" are found.

   You perform the inspections and find that the fuel pump must be replaced. Paragraph 5-13 is referenced.

   The rest of the inspection shows no other cause for the problem.

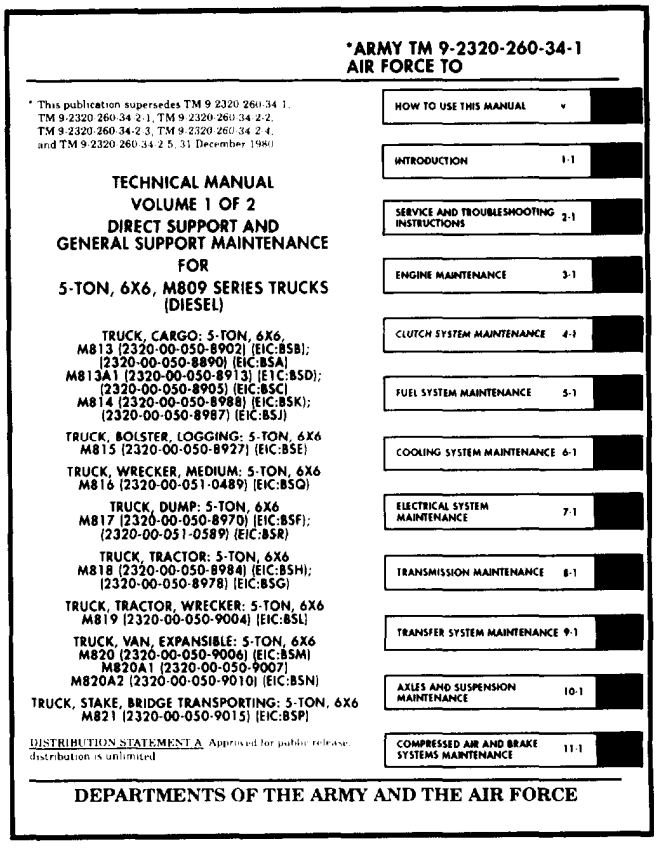

*ARMY TM 9-2320-260-34-1
AIR FORCE TO

* This publication supersedes TM 9-2320-260-34-1, TM 9-2320-260-34-2-1, TM 9-2320-260-34-2-2, TM 9-2320-260-34-2-3, TM 9-2320-260-34-2-4, and TM 9-2320-260-34-2-5, 31 December 1980.

TECHNICAL MANUAL
VOLUME 1 OF 2
DIRECT SUPPORT AND
GENERAL SUPPORT MAINTENANCE
FOR
5-TON, 6X6, M809 SERIES TRUCKS
(DIESEL)

TRUCK, CARGO: 5-TON, 6X6,
M813 (2320-00-050-8902) (EIC:BSB);
(2320-00-050-8890) (EIC:BSA)
M813A1 (2320-00-050-8913) (EIC:BSD);
(2320-00-050-8905) (EIC:BSC)
M814 (2320-00-050-8988) (EIC:BSK);
(2320-00-050-8987) (EIC:BSJ)

TRUCK, BOLSTER, LOGGING: 5-TON, 6X6
M815 (2320-00-050-8927) (EIC:BSE)

TRUCK, WRECKER, MEDIUM: 5-TON, 6X6
M816 (2320-00-051-0489) (EIC:BSQ)

TRUCK, DUMP: 5-TON, 6X6
M817 (2320-00-050-8970) (EIC:BSF);
(2320-00-051-0589) (EIC:BSR)

TRUCK, TRACTOR: 5-TON, 6X6
M818 (2320-00-050-8984) (EIC:BSH);
(2320-00-050-8978) (EIC:BSG)

TRUCK, TRACTOR, WRECKER: 5-TON, 6X6
M819 (2320-00-050-9004) (EIC:BSL)

TRUCK, VAN, EXPANSIBLE: 5-TON, 6X6
M820 (2320-00-050-9006) (EIC:BSM)
M820A1 (2320-00-050-9007)
M820A2 (2320-00-050-9010) (EIC:BSN)

TRUCK, STAKE, BRIDGE TRANSPORTING: 5-TON, 6X6
M821 (2320-00-050-9015) (EIC:BSP)

DISTRIBUTION STATEMENT A: Approved for public release; distribution is unlimited.

HOW TO USE THIS MANUAL v
INTRODUCTION 1-1
SERVICE AND TROUBLESHOOTING INSTRUCTIONS 2-1
ENGINE MAINTENANCE 3-1
CLUTCH SYSTEM MAINTENANCE 4-1
FUEL SYSTEM MAINTENANCE 5-1
COOLING SYSTEM MAINTENANCE 6-1
ELECTRICAL SYSTEM MAINTENANCE 7-1
TRANSMISSION MAINTENANCE 8-1
TRANSFER SYSTEM MAINTENANCE 9-1
AXLES AND SUSPENSION MAINTENANCE 10-1
COMPRESSED AIR AND BRAKE SYSTEMS MAINTENANCE 11-1

DEPARTMENTS OF THE ARMY AND THE AIR FORCE

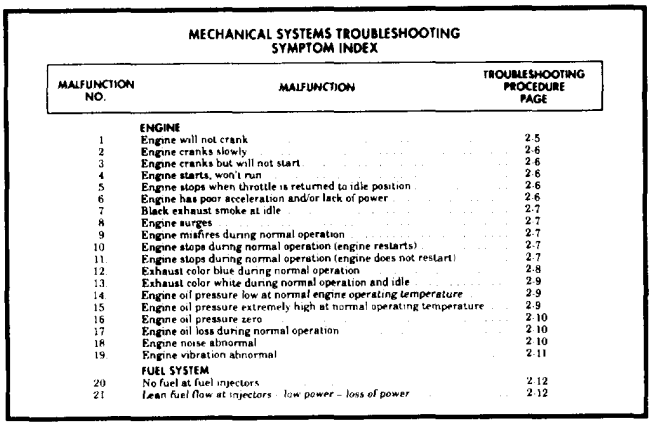

MECHANICAL SYSTEMS TROUBLESHOOTING
SYMPTOM INDEX

MALFUNCTION NO.	MALFUNCTION	TROUBLESHOOTING PROCEDURE PAGE
	ENGINE	
1	Engine will not crank	2-5
2	Engine cranks slowly	2-6
3	Engine cranks but will not start	2-6
4	Engine starts, won't run	2-6
5	Engine stops when throttle is returned to idle position	2-6
6	Engine has poor acceleration and/or lack of power	2-6
7	Black exhaust smoke at idle	2-7
8	Engine surges	2-7
9	Engine misfires during normal operation	2-7
10	Engine stops during normal operation (engine restarts)	2-7
11	Engine stops during normal operation (engine does not restart)	2-7
12	Exhaust color blue during normal operation	2-8
13	Exhaust color white during normal operation and idle	2-9
14	Engine oil pressure low at normal engine operating temperature	2-9
15	Engine oil pressure extremely high at normal operating temperature	2-9
16	Engine oil pressure zero	2-10
17	Engine oil loss during normal operation	2-10
18	Engine noise abnormal	2-10
19	Engine vibration abnormal	2-11
	FUEL SYSTEM	
20	No fuel at fuel injectors	2-12
21	Lean fuel flow at injectors – low power – loss of power	2-12

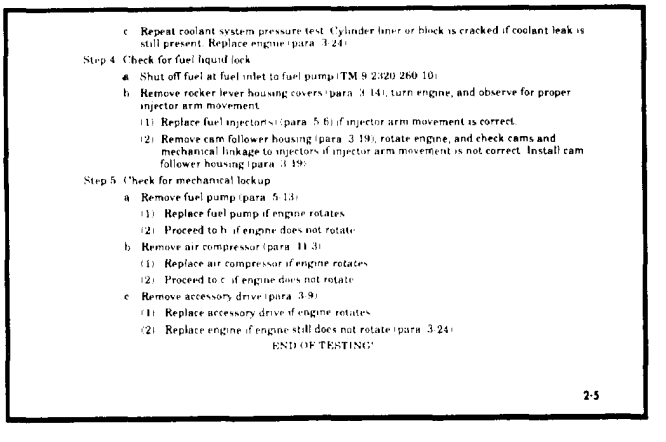

c. Repeat coolant system pressure test. Cylinder liner or block is cracked if coolant leak is still present. Replace engine (para. 3-24).

Step 4. Check for fuel liquid lock.

a. Shut off fuel at fuel inlet to fuel pump (TM 9-2320-260-10).

b. Remove rocker lever housing covers (para. 3-14), turn engine, and observe for proper injector arm movement.

(1) Replace fuel injectors (para. 5-6) if injector arm movement is correct.

(2) Remove cam follower housing (para. 3-19), rotate engine, and check cams and mechanical linkage to injectors if injector arm movement is not correct. Install cam follower housing (para. 3-19).

Step 5. Check for mechanical lockup.

a. Remove fuel pump (para. 5-13).

(1) Replace fuel pump if engine rotates.

(2) Proceed to b. if engine does not rotate.

b. Remove air compressor (para. 11-3).

(1) Replace air compressor if engine rotates.

(2) Proceed to c. if engine does not rotate.

c. Remove accessory drive (para. 3-9).

(1) Replace accessory drive if engine rotates.

(2) Replace engine if engine still does not rotate (para. 3-24).

END OF TESTING

2-5

9. To locate paragraph 5-13 refer to the first page of Chapter 5. You find that fuel pump maintenance is in section III (page 5-37). Turn to page 5-37 and find "Fuel Pump Replacement" in the "Fuel Pump Maintenance Index." You are directed to page 5-38.

TM 9-2320-260-34-1

CHAPTER 5
FUEL SYSTEM MAINTENANCE

Section I. Description and Data (page 5-1)
Section II. Fuel Injector Maintenance (page 5-3)
Section III. Fuel Pump Maintenance (page 5-37)

Section I. DESCRIPTION AND DATA

5-1. FUEL SYSTEM MAINTENANCE INDEX

PARA. NO.	TITLE	PAGE NO.
5-2.	Description	5-1
5-3.	Data	5-2
5-4.	Fuel Tank Repair	5-2

10. Turn to paragraph 5-13 on page 5-38. Here you will find the detailed procedure for removing the old fuel pump and replacing it with a new one.

TM 9-2320-260-34-1

Section III. FUEL PUMP MAINTENANCE

5-12. FUEL PUMP MAINTENANCE INDEX

PARA. NO.	TITLE	PAGE NO.
5-13.	Fuel Pump Replacement	5-38
5-14.	Fuel Pump Mounting to Holding Fixture	5-42
5-15.	Fuel Pump Shutoff Valves Replacement	5-43
5-16.	Pulsation Damper Maintenance	5-45
5-17.	Pressure Gear Pump Replacement	5-47
5-18.	Fuel Pump Spring Pack Maintenance	5-48
5-19.	Upper Spring Pack Maintenance	5-50
5-20.	Damper Maintenance	5-54
5-21.	Fuel Pump Air Cylinder Maintenance	5-56
5-22.	Fuel Pump Governor Replacement	5-58
5-23.	Fuel Pump Housing Maintenance	5-62
5-24.	Fuel Pump Front Cover Maintenance	5-66
5-25.	Fuel Pump Calibration	5-68

TM 9-2320-260-34-1

5-13. FUEL PUMP REPLACEMENT

THIS TASK COVERS:
a. Removal b. Installation

INITIAL SETUP

APPLICABLE MODELS
All

TOOLS
General mechanic's tool kit (Appendix B, Item 1)

MATERIALS/PARTS
Two lockwashers (Appendix D, Item 225)
Four lockwashers (Appendix D, Item 217)
Gasket (Appendix D, Item 119)

REFERENCES (TM)
TM 9-2320-260-10
TM 9-2320-260-20
TM 9-2320-260-34P-1

EQUIPMENT CONDITION
- Parking brake set (TM 9-2320-260-10)
- Hood raised and secured (TM 9-2320-260-10)
- Fuel supply and return tubes removed (TM 9-2320-260-20)

GENERAL SAFETY INSTRUCTIONS
Diesel fuel is flammable. Do not perform this task near open flame.

a. Removal

WARNING

Diesel fuel is flammable. Do not perform fuel system procedures near open flame. Injury to personnel may result.

1. Disconnect tachometer driveshaft cable (4) from fuel pump (14).
2. Remove nut (11) and emergency shutdown control wire (9) from emergency shutoff valve (8).
3. Remove nut (5) and emergency control cable (10) from manual shutoff valve (7).
4. Disconnect fuel supply tube (6) from manual shutoff valve (7).

NOTE

Perform step 5 for M816 and M819 vehicles.

5. Remove two screws (28), lockwashers (29), and air cylinder bracket (27) from VS governor (26). Discard lockwashers (29).
6. Disconnect primer pump fuel line (15) from fuel pump (14).
7. Disconnect fuel inlet line (13) from fuel pump (14).
8. Disconnect fuel return tube (12) from fuel pump (14).
9. Remove spring (23) from accelerator lever (19) and bracket (25).
10. Remove nut (16), screw (18), and accelerator rod (17) from accelerator lever (19).
11. Remove four screws (20), washers (21), lockwashers (22), fuel pump (14), and gasket (3) from air compressor (1). Discard lockwashers (22) and gasket (3).
12. Remove spider coupling (2) from coupling drive (24).

TM 9-2320-260-34-1

5-13. FUEL PUMP REPLACEMENT (Contd)

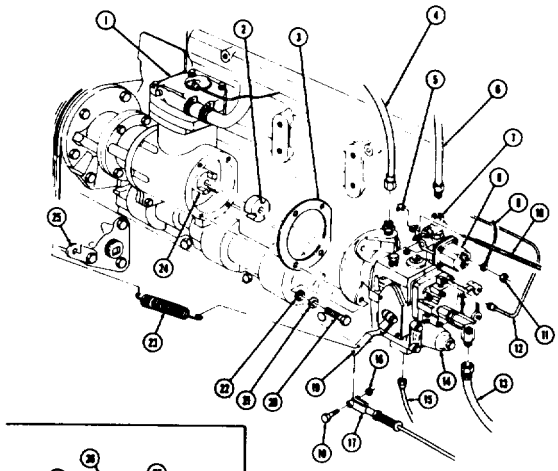

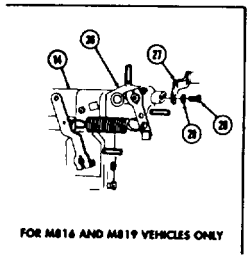

FOR M816 AND M819 VEHICLES ONLY

DETAILED MAINTENANCE PROCEDURES:

11. Detailed procedures: Include everything you must do to accomplish a basic maintenance task.

    a. Before beginning the maintenance task, look through the procedure. You must familiarize yourself with the entire maintenance procedure before beginning the maintenance task. The entire procedure of paragraph 5-13: "Fuel Pump Replacement" includes: a. Removal and b. Installation.

    b. The eight basic headings listed under "INITIAL SETUP" outline special tools, materials, personnel requirements, and special conditions. Headings will not be listed if there are no entries. The headings are:

        - **APPLICABLE MODELS** Any model(s) that require that particular maintenance task.
        - **TEST EQUIPMENT** Test equipment needed to complete the task.
        - **SPECIAL TOOLS** Special tools needed to complete the task.
        - **TOOLS** Common tools, not in the General Mechanic's Tool Kit, needed to complete the task.
        - **MATERIAIS/PARTS** All parts or materials needed to complete the task.
        - **PERSONNEL REQUIRED** The number of personnel needed to perform the task. If only one mechanic is needed, this heading will not be used. If you think that you need more help to correctly or safely complete a task (perhaps as the result of unusual conditions, etc.), alert your supervisor and ask for help.
        - **REFERENCES (TM)** Additional manuals needed to complete the task.
        - **EQUIPMENT CONDITION** Notes the conditions that must exist before starting the task.
        - **GENERAL SAFETY INSTRUCTIONS** Summarizes all safety warnings for the maintenance task.

    c. A step-by-step maintenance procedure follows the "INITIAL SETUP" and gives detailed instructions for the procedure. These instructions give part name and action performed. The numbers in parentheses correspond to the part's callout number in the accompanying illustration. Warnings, cautions, and notes give additional information.

        - **WARNINGS** - Indicate conditions, practices, or procedures which must be observed to avoid personnel injury, loss of life, or long-term health hazard.
        - **CAUTIONS** - Indicate conditions, practices, Or procedures which must be observed to avoid damage to equipment or destruction of equipment.
        - **NOTES** – Include essential information of special importance, interest, or aid in job performance.

    d. At the end of a procedure, "FOLLOW-ON TASK(S)" will list the additional task(s) that must be performed to complete the procedure.

12. You can also use the Table of Contents (page ii) to find more information about the vehicle.

13. Refer to TM 9-2320-260-34P, Direct Support and General Support Maintenance Repair Parts and Special Tools List for Truck, 5-Ton, 6x6, M809 series, when requisitioning parts, special tools, and equipment for direct support and general support maintenance.

14. Your manual is easier to use once you understand its design. We hope it will encourage you to use it more often as an aid to maintenance support for M809 series vehicles.

CHAPTER 1

INTRODUCTION

Section I. General Information (page 1-1)
Section II. Equipment Description and Data (page 1-2)

Section I. GENERAL INFORMATION

1-1. SCOPE

a. This technical manual contains instructions for direct support and general support maintenance of 5-ton, 6x6, diesel, M809 series vehicles.

b. The vehicle model numbers and equipment names are:

(1) M813 Cargo Truck, W/W and WO/W
(2) M813A1 Cargo Truck, W/W and WO/W
(3) M814 Cargo Truck, W/W and WO/W
(4) M815 Bolster Logging Truck, W/W
(5) M816 Medium Wrecker Truck, W/W
(6) M817 Dump Truck, W/W and WO/W
(7) M818 Tractor Truck, W/W and WO/W
(8) M819 Tractor Wrecker Truck, W/W
(9) M820 Expansible Van Truck, WO/W
(10) M820A1 Expansible Van Truck, WO/W
(11) M820A2 Expansible Van Truck, WO/W
(12) M821 Bridge Transporting Stake Truck, W/W

1-2. MAINTENANCE FORMS, RECORDS, AND REPORTS

Department of the Army forms and procedures used for equipment maintenance will be those prescribed by DA Pam 738-750, The Army Maintenance Management System (TAMMS).

1-3. DESTRUCTION OF ARMY MATERIEL TO PREVENT ENEMY USE

Procedures for destruction of Army materiel to prevent enemy use can be found in TM 750-244-6.

1-4. PREPARATION FOR STORAGE OR SHIPMENT

Storage and shipment instructions are in TM 9-2320-260-20. Additional information can be found in TM 746-10, Marking, Packaging, and Shipment of Supplies and Equipment: General Packaging Instructions for Field Use.

1-5. OFFICIAL NOMENCLATURE, NAMES, AND DESIGNATIONS

The nomenclature, names, and designations used in this manual are in accordance with MIL-HDBK-63038-2.

1-6. EQUIPMENT REQUIRING CALIBRATION

Calibration requirements in this manual cover the fuel pump and fuel injectors and can be found in Chapter 5 of this manual.

1-7. REPORTING QUALITY DEFICIENCIES, IDEAS, AND EQUIPMENT IMPROVEMENT RECOMMENDATIONS

If your 5-ton, 6x6, M809 series vehicle needs improvement, let us know. Send us an EIR. You, the user, are the only one who can tell us what you don't like about your equipment. Let us know why you don't like the design. Put it on an SF 368 (Quality Deficiency Report). Mail in accordance with DA PAM 738-750.

1-8. EQUIPMENT IMPROVEMENT REPORT AND MAINTENANCE DIGEST (EIR MD)

The quarterly Equipment Improvement Report and Maintenance Digest (EIR MD), TB 43-0001-39 series, contains valuable field information on the equipment covered in this manual. The information in the TB 43-0001-39 series is compiled from some of the Equipment Improvement Reports (EIR) that you prepared on the vehicles covered in this manual. Many of these articles resulted from comments, suggestions, and improvement recommendations that you submitted to the EIR program. The TB 43-0001-39 series contains information on equipment improvements, minor alterations, proposed Modification Work Orders (MWO's), warranties (if applicable), actions taken on some of your DA Form 2028's (Recommended Changes to Publications), and advance information on proposed changes that may affect this manual. The information will help you in doing your job better and will help in keeping you advised of the latest changes to this manual. Also, refer to DA PAM 25-30, Consolidated Index of Army Publications and Blank Forms, and Appendix A, References, in this manual.

Section II. EQUIPMENT DESCRIPTION AND DATA

1-9. EQUIPMENT DESCRIPTION AND DATA

Detailed descriptions covering the 5-ton, 6x6, M809 series vehicles are in TM 9-2320-260-10 and TM 9-2320-260-20.

1-10. EQUIPMENT CHARACTERISTICS, CAPABILITIES, AND FEATURES

Detailed descriptions and data covering the 5-ton, 6x6, M809 series vehicles are described in TM 9-2320-260-20. Equipment configurations with dimensions and weights (tabulated data) follow.

CHAPTER 2

SERVICE AND TROUBLESHOOTING INSTRUCTIONS

Section I. Repair Parts, Special Tools, TMDE, and Support Equipment (page 2-1)
Section II. Troubleshooting (page 2-1)
Section III. General Maintenance Instructions (page 2-32)

Section I. REPAIR PARTS, SPECIAL TOOLS, TMDE, AND SUPPORT EQUIPMENT

2-1. COMMON TOOLS AND EQUIPMENT

Refer to Modified Table of Organization and Equipment (MTOE) for authorized common tools and equipment applicable to your unit.

2-2. SPECIAL TOOLS AND SUPPORT EQUIPMENT

Special tools and support equipment are listed and illustrated in TM 9-2320-260-34P.

2-3. TEST, MEASUREMENT, AND DIAGNOSTIC EQUIPMENT (TMDE)

Calibrate all measuring and test equipment used to determine equipment conformance in accordance with MIL-STD-120, MIL-C-45662, MIL-L-45607, and TB 43-180.

2-4. FABRICATED TOOLS

Fabricated tools needed to maintain the equipment mentioned in this manual can be found in Appendix E. These tools are not available for issue; therefore, each one must be fabricated locally and applied by direct and general support personnel.

2-5. REPAIR PARTS

Repair parts are listed and illustrated in TM 9-2320-260-34P,

Section II. TROUBLESHOOTING

2-6. GENERAL TROUBLESHOOTING INSTRUCTIONS

a. Troubleshooting procedures in this section cannot give all the answers or correct all vehicle malfunctions encountered. However, these procedures are an organized step-by-step approach to a problem that directs tests and inspections toward the source of a problem and successful solution.

Information in this section is for use by support maintenance personnel in conjunction with, and as a supplement to, the troubleshooting procedures in TM 9-2320-260-20.

WARNING

- Do not operate a deadlined vehicle without preliminary inspection. Failure to do so may cause further damage to a disabled component and possible injury to personnel.
- Do not operate vehicle in an enclosed area without adequate ventilation. Failure to do so may result in injury to personnel.
- Hearing protection is required for driver, co-driver, and mechanic when engine is running. Noise levels produced by this vehicle exceed 85dB, which may cause injury to personnel.

2-6. GENERAL TROUBLESHOOTING INSTRUCTIONS (Contd)

b. Perform the easiest and most obvious troubleshooting tasks and corrections first. Most malfunctions are easily corrected. For example:

(1) Low power problems are generally caused by loose throttle linkage or dirty fuel or air filters.

(2) Excessive oil consumption is generally caused by leaky gaskets or loose line connections.

c. Double check before disassembly. The source of most engine problems can be traced to more than one part in a system. For example:

(1) Excessive fuel consumption may not be caused by the fuel pump alone. Instead, the trouble could be a clogged air cleaner reducing air inflow or a restricted passage causing abnormally high back pressure.

(2) Engines very often are disassembled in search of a complaint and the real evidence of the problem is destroyed. Check again to be sure an easier solution to the problem has not been overlooked.

(3) Check all tags, service request forms, and vehicle logbook for repair history. This may help lead to the source of problems.

d. Before attempting to correct a problem, diagnose the cause of the problem. Do not allow the same malfunction to reoccur.

MECHANICAL SYSTEMS TROUBLESHOOTING SYMPTOM INDEX

MALFUNCTION NO.	MALFUNCTION	TROUBLESHOOTING PROCEDURE PAGE
	ENGINE	
1.	Engine will not crank	2-5
2.	Engine cranks slowly	2-6
3.	Engine cranks but will not start	2-6
4.	Engine starts, won't run	2-6
5.	Engine stops when throttle is returned to idle position	2-6
6.	Engine has poor acceleration and/or lack of power	2-6
7.	Black exhaust smoke at idle	2-7
8.	Engine surges	2-7
9.	Engine misfires during normal operation	2-7
10.	Engine stops during normal operation (engine restarts)	2-7
11.	Engine stops during normal operation (engine does not restart)	2-7
12.	Exhaust color blue during normal operation	2-8
13.	Exhaust color white during normal operation and idle	2-9
14.	Engine oil pressure low at normal engine operating temperature	2-9
15.	Engine oil pressure extremely high at normal operating temperature	2-9
16.	Engine oil pressure zero	2-10
17.	Engine oil loss during normal operation	2-10
18.	Engine noise abnormal	2-10
19.	Engine vibration abnormal	2-11
	FUEL SYSTEM	
20.	No fuel at fuel injectors	2-12
21.	Lean fuel flow at injectors – low power – loss of power	2-12
22.	Excessive exhaust smoke at idle and under load - excessive fuel consumption	2-12
23.	Engine idle rough, erratic	2-13
24.	Engine overspeeds	2-13
25.	Engine lubricating oil diluted by fuel	2-13
26.	Engine knocks	2-13

MECHANICAL SYSTEMS TROUBLESHOOTING SYMPTOM INDEX (Contd)

MALFUNCTION NO.	MALFUNCTION	TROUBLESHOOTING PROCEDURE PAGE
	COOLING SYSTEM	
27.	Loss of coolant	2-14
28.	Engine coolant temperature gage above 230°F (110°C)	2-14
	CLUTCH	
29.	Vehicle will not remove with clutch engaged	2-14
30.	Burning odor evident with clutch engaged	2-15
31.	Clutch noisy during engagement and disengagement	2-15
32.	Vibration during clutch engagement	2-16
	TRANSMISSION	
33.	Engine stalls when clutch is engaged and transmission is in gear	2-16
34.	Vehicle will not move when clutch is engaged and transmission is in gear	2-16
35.	Excessive noise during shifting	2-16
36.	Transmission oil leakage	2-16
37.	Transmission grinds and/or pops out of gear during shifting	2-17
	TRANSFER CASE	
38.	Transfer case will not operate front differential	2-17
39.	Transfer case will not operate rear differentials	2-17
40.	Transfer case oil leakage	2-18
41.	Transfer case noisy	2-18
42.	Transfer case grinds or pops out of gear during normal vehicle operation	2-18
	DIFFERENTIAL	
43.	Differential noisy	2-19
44.	Differential clunks during turns or initial takeoff	2-19
45.	Differential vibrates	2-19
46.	Differential leaks oil	2-19
47.	Abnormal tire wear (front axle)	2-19
48.	Abnormal tire wear (rear axle)	2-20
	STEERING GEAR	
49.	Excessive play in steennng	2-20
50.	Vehicle shimmy (front)	2-20
51.	Steering gear leaking oil	2-20
52.	Oil leaking from power steering pump	2-20
53.	Excessive power steering pump noise	2-20
54.	Steering wheel hard to tum	2-20
	AIR COMPRESSOR	
55.	Low air pressure (no air leaks, governor properly adjusted and operative)	2-21
56.	Air compressor passes excessive oil (excessive oil bled from air reservoirs)	2-21
57.	Air compressor does not unload (air governor adjusted and operative)	2-21
58.	Air compressor head leaking water	2-21
	POWER TAKEOFF	
59.	(Transmission-driven) power takeoff inoperative	2-22
60.	(Transfer case-driven) power takeoff inoperative	2-22
61.	Power takeoff slips out of gear	2-22
62.	Transmission power takeoff leaks oil	2-22
63.	Transfer power takeoff leak soil	2-23

MECHANICAL SYSTEMS TROUBLESHOOTING SYMPTOM INDEX (Contd)

MALFUNCTION NO.	MALFUNCTION	TROUBLESHOOTING PROCEDURE PAGE
	DUMP BODY	
64.	Dump body will not raise	2-23
65.	Dump body will not lower	2-25
66.	Dump body will not hold in raised position	2-25
	MEDIUM WRECKER CRANE (M816)	
67.	Crane boom fails to swing (other hydraulic systems operate satisfactorily)	2-25
68.	Crane swings erratically	2-26
69.	Boom fails to extend or retract (other hydraulic systems operate satisfactorily)	2-26
70.	Boom extends or retracts sluggishly	2-26
71.	Hoist w-inch fails to rotate, operates too slowly, or operates erratically	2-26
72.	Boom fails to raise or raises and lowers sluggishly	2-27
	TRACTOR WRECKER (M819)	
73.	Crane boom fails to swing (other hydraulic systems operate satisfactorily)	2-27
	HYDRAULIC LIFTGATE (M820A2)	
74.	Liftgate will not open or close	2-27
75.	Platform does not stop at proper height	2-28
76.	Liftgate at incorrect angle when closed	2-28
77.	Liftgate fails cooperate on remote control	2-28
78.	Liftgate fails to operate on manual (lever) control	2-28
	WINTERIZATION KITS	
79.	Heater does not start	2-28
80.	Blower runs in START position; heater fails to ignite	2-28
81.	Heater starts, but fails to run	2-29
82.	Heater runs continuously in high or low heat	2-29
83.	Heater overheats	2-29
84.	Blower does not stop when heater is shutoff	2-29
85.	Heater fails to start	2-29
86.	Fuel burning heaters fail to turn on	2-29
87.	Fuel burning heaters overheat – overheat switch is good	2-30
88.	Fuel burning heaters overheat – continue to bum	2-30
89.	Heater output too low	2-30
90.	Heater smokes and bangs when starting	2-30
91.	Blower will not stop after turn off	2-30
92.	Odor of fuel in ventilating air (personnel heater only)	2-30
93.	Blower runs but heater fails to ignite	2-31
94.	Heater smokes during normal operation	2-31
	WINCHES	
95.	Clutch will not engage drum (front and midship winches)	2-31
96.	Winch noisy under load	2-31
97.	Drum overruns cable or cable coils loosen when paying out cable (front and midship tithes)	2-32
98.	Winch (all types) does not hold load when power released	2-32
99.	Winch (all types) leaks oil	2-32
100.	Rear winch operates atone speed only	2-32

Table 2-1. Mechanical Troubleshooting.

MALFUNCTION TEST OR INSPECTION CORRECTIVE ACTION

ENGINE

1. ENGINE WILL NOT CRANK

WARNIN6

Ensure fuel shutoff valve is off and remove throttle cable before cranking engine. Failure to do so may result in injury to personnel.

Step 1. Hand rotate engine at crankshaft two complete turns.

Proceed to step 2 if engine does not turn.

Step 2. Remove rocker lever housings (para. 3-15) and remove decompression plugs. Rotate engine.

a. If engine rotates and ejects liquid, determine if liquid is coolant or fuel. Install rocker lever housing (para. 3-15).

(1) Proceed to step 3 if liquid is coolant.

(2) Proceed to step 4 if liquid is fuel.

b. Proceed to step 5 if engine does not rotate.

Step 3. Check for coolant liquid lock.

a. Perform coolant system pressure test to confirm coolant leak into combustion space (malfunction 27).

b. Remove and inspect cylinder heads (para. 3-18). Replace cylinder head(s) if cracked or warped.

c. Repeat coolant system pressure test. Cylinder liner or block is cracked if coolant leak is still present. Replace engine (para. 3-24).

Step 4. Check for fuel liquid lock.

a. Shut off fuel at fuel inlet to fuel pump (TM 9-2320-260-10).

b. Remove rocker lever housing covers (para. 3-14), turn engine, and observe for proper injector arm movement.

(1) Replace fuel injector(s) (para. 5-6) if injector arm movement is correct.

(2) Remove cam follower housing (para. 3-19), rotate engine, and check cams and mechanical linkage to injectors if injector arm movement is not correct. Install cam follower housing (para. 3-19).

Step 5. Check for mechanical lockup.

a. Remove fuel pump (para. 5-13).

(1) Replace fuel pump if engine rotates.

(2) Proceed to b. if engine does not rotate.

b. Remove air compressor (para. 11-3).

(1) Replace air compressor if engine rotates.

(2) Proceed to c. if engine does not rotate.

c. Remove accessory drive (para. 3-9).

(1) Replace accessory drive if engine rotates.

(2) Replace engine if engine still does not rotate (para. 3-24).

END OF TESTING!

Table 2-1. Mechanical Troubleshooting (Contd).

MALFUNCTION TEST OR INSPECTION CORRECTIVE ACTION

2. ENGINE CRANKS SLOWLY

Step 1. Perform electrical troubleshooting (TM 9-2320-260-20).

Step 2. Perform malfunction 1, step 5, malfunction 14, step 2, and malfunction 15.

END OF TESTING!

3. ENGINE CRANKS BUT WILL NOT START

Step 1. Check for defective fuel pump shutoff valves.

Replace fuel pump shutoff valves if defective (para. 5-15).

Step 2. Check for broken fuel pump driveshaft.

a. Disconnect tachometer cable from fuel pump, crank engine (TM 9-2320-260-10), and observe if driveshaft end in pump housing is rotating.

b. Replace fuel pump if driveshaft does not rotate (para. 5-13).

Step 3. Check for correct fuel injector and valve adjustment.

Adjust fuel injectors and valves as necessary (para. 3-82, 3-83, or 3-84).

Step 4. Check for dirty or damaged fuel injectors.

Replace fuel injectors if dirty or damaged (para. 5-6).

Step 5. Check fuel pump operation.

Replace fuel pump if defective (para. 5-13).

END OF TESTING!

4. ENGINE STARTS, WON'T RUN

Step 1. Check for low fuel flow.

Correct fuel line damage. Clean plugged or dirty fuel strainer (TM 9-2320-260-20).

Step 2. Proceed to malfunction 21.

END OF TESTING!

5. ENGINE STOPS WHEN THROTTLE IS RETURNED TO IDLE POSITION

Step 1. Check if engine governor idle speed is set too low.

Adjust engine governor idle speed to specifications if incorrect (para. 5-25).

Step 2. Check fuel delivery system (malfunction 20).

END OF TESTING!

6. ENGINE HAS POOR ACCELERATION AND/OR LACK OF POWER

Step 1. Check if engine maximum governed speed is set too low.

Adjust engine maximum governed speed to specifications if incorrect (para. 5-25).

Step 2. Check fuel injector operation (malfunction 21).

Step 3. Check engine valve train operation.

Adjust valves to specifications if incorrect (para. 3-82, 3-83, or 3-84).

Step 4. Check engine cylinder compression (malfunction 12).

END OF TESTING!

Table 2-1. Mechanical Troubleshooting (Contd).

MALFUNCTION TEST OR INSPECTION CORRECTIVE ACTION

7. BLACK EXHAUST SMOKE AT IDLE

Check if engine maximum governed speed is set too high.

Adjust maximum engine governed speed to specification if incorrect (para. 5-25).

END OF TESTING!

8. ENGINE SURGES

Step 1. Check for low fuel supply at fuel pump and injectors.

Perform malfunction 20 if fuel supply is low.

Step 2. Check for excess fuel supply.

Perform malfunction 22 if fuel supply is excessive.

END OF TESTING!

9. ENGINE MISFIRES DURING NORMAL OPERATION

Step 1. Check fuel injector operation.

Replace fuel injectors if defective (para. 5-6).

Step 2. Check engine valve train operation and valve lash adjustment.

Correct valve train operation and adjust valves to specifications if incorrect (para. 3-82, 3-83, or 3-84).

Step 3. Check engine cylinder compression.

Perform engine cylinder compression test (malfunction 12).

END OF TESTING!

10. ENGINE STOPS DURING NORMAL OPERATION (ENGINE RESTARTS)

Perform malfunctions 4 and 5.

END OF TESTING!

11. ENGINE STOPS DURING NORMAL OPERATION (ENGINE DOES NOT RESTART)

Step 1. Crank engine (TM 9-2320-260-10).

a. Perform malfunction 1, step 5 if engine will not crank.

b. Proceed to step 2 if engine cranks.

Step 2. Check low oil pressure lockout switch (TM 9-2320-260-20).

a. Replace low oil pressure lockout switch if damaged (TM 9-2320-260-20).

b. Perform malfunction 21 if low oil pressure lockout switch is operative.

END OF TESTING!

Table 2-1. Mechanical Troubleshooting **(Contd).**

MALFUNCTION TEST OR INSPECTION CORRECTIVE ACTION

12. EXHAUST COLOR BLUE DURING NORMAL OPERATION

NOTE

- Blue exhaust indicates presence of excess engine oil in cylinder combustion space.
- Compression test supplements STE-ICE cylinder unbalance test by identifying defective components.

Step 1. Engine cylinder compression test.

a. Preparation: Check valves and rocker arms for proper movement and ensure they are adjusted to specifications (para. 3-82 or 3-83), cutoff fuel supply at fuel pump (TM 9-2320-260-20), ensure batteries are fully charged and starter operates normally, and remove all decompression plugs in cylinder heads (para. 3-18).

b. Connect compression gage and necessary adapter to decompression plug port of number 1 cylinder. Crank engine through at least five compression strokes or until gage stops rising. Record cylinder number and maximum gage reading. Remove gage from number 1 cylinder. This is the "dry" test.

c. Repeat step lb. for remaining cylinders.

d. Add 1 to 1-1/2 oz (28-43 ml) of clean engine oil through decompression plug port for each cylinder before connecting compression-gage. Repeat steps 1b. and 1c. This is the "wet" test. Record gage readings for "wet" test beside readings for "dry" test for each cylinder.

Step 2. Analysis of compression test results.

a. Compute compression loss for "dry" test for each cylinder compared to cylinder with highest reading. Use the following formula:

$$\frac{\text{Highest Cylinder Reading} - \text{Each Remaining Cylinder Reading}}{\text{Highest Cylinder Reading}} \times 100 = \%\ \text{Compression Loss}$$

b. If one or more cylinders has an 8-10% or greater compression loss in "dry" test, but improved to acceptable (less than 8%) loss in "wet" test, piston, piston rings, or cylinder liner problem is indicated. Remove cylinder head(s) (para. 3-18) and inspect pistons, piston rings, and cylinder liner for breaks, wear, and scoring. Repair or replace defective parts (paras. 3-47 and 3-50).

c. If one or more cylinders had an 8-10% or greater loss in both "wet" and "dry" tests, the compression loss is on top of engine. Remove cylinder head(s) (Para. 3-18) and inspect valves, valve seats and guides, and cylinder head gasket(s). Replace or repair defective parts (para. 3-53).

d. If repairs performed in b. and/or c. do not sufficiently restore engine to normal operation, inspect camshaft, follower, and pushrod for defects. Repair or replace defective parts (paras. 3-44, 3-41, and 3-37).

e. Replace valve seats and guides (para. 3-78) if compression test readings are within limits for all cylinders, engine develops normal power, but still shows blue exhaust.

END OF TESTING!

Table 2-1. Mechanical Troubleshooting (Contd).

MALFUNCTION TEST OR INSPECTION CORRECTIVE ACTION

13. EXHAUST COLOR WHITE DURING NORMAL OPERATION AND IDLE

CAUTION

Thick white smoke indicates coolant is present in engine combustion chambers during operation. When this condition is evident, shut engine down immediately and determine cause. Continued engine operation may result in permanent engine damage.

Step 1. Perform cooling system pressure test (malfunction 27).

Step 2. Check cylinder heads and gaskets for defects (para. 3-18).

NOTE

When engine exhaust color remains white during test run after cylinder heads or gaskets replacement, internal engine block cooling jacket failure is indicated.

Step 3. Replace engine (para. 3-24).

END OF TESTING!

14. ENGINE OIL PRESSURE LOW AT NORMAL ENGINE OPERATING TEMPERATURE

Step 1. Remove oil pan (para. 3-20) and check for excessive crankshaft bearing clearance.

Repair or replace engine if crankshaft bearing clearances are excessive (para. 3-24).

Step 2. Check oil pump operation.

Repair or replace oil pump if defective (para. 3-34 or 3-52).

NOTE

If engine oil pressure remains low after completing troubleshooting, internal engine block oil passage failure is indicated.

Step 3. Replace engine (para. 3-24).

END OF TESTING!

15. ENGINE OIL PRESSURE EXTREMELY HIGH AT NORMAL OPERATING TEMPERATURE

NOTE

Continued high oil pressure may indicate spun internal engine bearings or restricted engine block oil feed passages.

Disassemble engine (chapter 3, section IV) and check for spun bearings and restricted oil passages.

Replace engine (para. 3-24) if evidence of spun engine bearings or restricted oil passages is found.

END OF TESTING!

Table 2-1. Mechanical Troubleshooting (Contd).

MALFUNCTION TEST OR INSPECTION CORRECTIVE ACTION

16. ENGINE OIL PRESSURE ZERO

CAUTION

Do not operate engine except during testing when condition of no oil pressure is evident. Continued operation may damage engine.

Step 1. Check oil pressure gage for proper operation. Tee into oil pressure line and install test gage.

a. Replace faulty gage if test gage indicates proper oil pressure (TM 9-2320-260-20).

b. Perform step 2 if zero oil pressure is confirmed.

Step 2. Complete troubleshooting malfunction 14.

END OF TESTING!

17. ENGINE OIL LOSS DURING NORMAL OPERATION

Perform troubleshooting malfunctions 12 and 14.

END OF TESTING!

18. ENGINE NOISE ABNORMAL

NOTE

When abnormal engine noise is evident, engine should be checked and location of noise determined to ensure that engine will not be permanently damaged.

Step 1. If knocking noise is located at front of engine, check camshaft gear and accessory drive gear for damage, excessive backlash, and loose fit. Check camshaft for excessive end play.

a. Remove front gear cover (para. 3-33).

b. Replace camshaft or accessory drive gears if gears are loose (para. 3-44 or 3-32).

c. Replace crankshaft gear and key if gear is loose (para. 3-48).

d. Replace worn gear(s) if backlash is excessive (paras. 3-42, 3-44, and 3-48).

e. Replace camshaft thrust plate if camshaft end play is excessive (para. 3-44).

Step 2. If a knocking noise is located at top of engine, remove rocker lever housing covers (para. 3-14) and check valve train components mounted on cylinder heads for wear, defects, or incorrect adjustment.

a. Adjust valve train components as necessary (paras. 3-15 through 3-18).

b. Replace valve train components if worn or defective (paras. 3-15 through 3-18).

Step 3. If knocking noise is located at side of engine, remove inspection cover, valve covers, valve train components, and cam followers. Check valve train components for defects or wear.

Replace valve train components if worn or defective (paras. 3-15 through 3-18).

Table 2-1. Mechanical Troubleshooting (Contd).

MALFUNCTION TEST OR INSPECTION CORRECTIVE ACTION

NOTE

When flywheel is loose on crankshaft., damage to flywheel/crankshaft mating surfaces can occur. Inspection of mating surfaces should be performed prior to tightening flywheel screws.

Step 4. If a knocking noise is located at bottom or rear of engine, check flywheel for loose condition. Place transmission in neutral, start engine, and press and release clutch a number of times (TM 9-2320-260-10).

a. If noise changes, remove transmission and clutch (paras. 8-4 or 8-5 and 4-2) and check flywheel screws and pilot bearing for damage and loose condition.

b. Tighten loose screws or replace flywheel parts if worn or defective (para. 3-21).

c. Replace pilot bearing if damaged (para. 4-2).

Step 5. If a knocking noise is located at bottom of engine, remove oil pan (para. 3-20) and check condition of main bearings, crankshaft, and connecting rods for wear and defects.

a. Replace main bearings and crankshaft if worn or defective (para. 3-48).

b. Replace connecting rods if worn or defective (para 3-47).

c. If no defects are found, remove pistons and connecting rods and check connecting rod wrist pins and pistons for wear and defects. Replace defective components (para. 3-47).

END OF TESTING!

19. ENGINE VIBRATION ABNORMAL

Step 1. Check for loose or defective crankshaft vibration damper.

a. If vibration damper is loose, check woodruff key and crankshaft and vibration damper mating surfaces for damage. Replace damaged components (paras. 3-5 and 3-48).

b. Replace vibration dampener if defective (para. 3-5).

Step 2. Check engine cylinders compression readings (malfunction 12).

Step 3. Complete troubleshooting malfunction 9.

END OF TESTING!

FUEL SYSTEM

WARNING

- Diesel fuel is flammable. Do not perform troubleshooting checks near open flame, sparks, or electricity. Injury to personnel may result.
- Eye protection is required when performing fuel system troubleshooting checks. Failure to wear eye protection may result in injury to personnel.
- Ignition switch must remain off during fuel system troubleshooting checks except when necessary to perform malfunction check. Failure to turn ignition system off may result in injury to personnel.

Table 2-1. Mechanical Troubleshooting (Contd).

MALFUNCTION TEST OR INSPECTION CORRECTIVE ACTION

20. NO FUEL AT FUEL INJECTORS

Step 1. Check fuel injection pump fuel shutoff valve for proper operation and adjustment. Place fuel shutoff cable control in RUN position. Confirm valve on fuel pump is in proper position.

a. Replace fuel shutoff cable if fuel shutoff valve is not in proper position (TM 9-2320-260-20).

b. Replace fuel shutoff valve if fuel shutoff valve is in proper position (para. 5-15).

Step 2. Check if electric fuel shutoff solenoid has power when ignition is on.

Replace electric fuel shutoff solenoid if still no fuel at injectors (para. 5-15).

NOTE

Air entering fuel delivery lines may block fuel flow. Air can enter a line(s) when a fitting(s) is loose or a line(s) or a fitting(s) is defective. This is indicated by leaking fuel.

Step 3. Check fuel injector nozzles for proper operation. Remove fuel injector nozzles and bench test (paras. 5-6 through 5-11).

a. Clean, adjust, and retest fuel injectors if operation is incorrect (paras. 5-6 through 5-11).

b. Replace fuel injectors if fuel injector nozzles are defective (para. 5-6).

END OF TESTING!

21. LEAN FUEL FLOW AT INJECTORS - LOW POWER - LOSS OF POWER

Step 1. Check for incorrect fuel injector and valve adjustments.

Adjust injectors and valves as necessary (paras. 3-82, 3-83, and 3-84).

Step 2. Check fuel injectors for proper operation.

Clean or replace fuel injectors if defective (para. 5-6).

Step 3. Check fuel pump for proper operation.

Replace fuel pump (para. 5-13) with known calibrated fuel pump.

a. Check fuel tank and fuel supply lines for restrictions if lean fuel flow condition is confirmed (TM 9-2320-260-20).

b. Replace fuel pump if now there is full fuel flow to fuel injectors (para. 5-13).

Step 4. Check cylinder heads and fuel crossovers for obstructions or leaks.

Clean fuel passages, correct leaks, or replace parts (paras. 3-17 and 3-18).

END OF TESTING!

22. EXCESSIVE EXHAUST SMOKE AT IDLE AND UNDER LOAD - EXCESSIVE FUEL CONSUMPTION

Step 1. Check for incorrect fuel injector and valve adjustments.

Adjust fuel injectors and valves as necessary (para. 3-82, 3-83, or 3-84).

Step 2. Check for dirty or damaged fuel injectors,

Remove, inspect, and clean dirty injectors. Replace fuel injectors if damaged (para. 5-6).

Step 3. Check fuel pump calibration. Remove fuel pump (para. 5-13) and substitute known calibrated fuel pump.

a. Replace fuel pump if excessive smoke condition is corrected (para. 5-13).

b. Perform step 4 if excessive smoke condition is not corrected.

Table 2-1. Mechanical Troubleshoting (Contd).

MALFUNCTION TEST OR INSPECTION CORRECTIVE ACTION

Step 4. Check cylinder heads for damage or defects. Remove cylinder heads (para.3-18) and check for warped cylinder heads, faulty gaskets, and burned or improperly seated valves (para. 3-51).

a. Replace or repair cylinder heads if warped.

b. Perform valve maintenance as necessary (para. 3-77).

c. While cylinder heads are removed, check for worn or scored cylinder liners and broken piston rings. Replace cylinder liners if scored (para. 3-50) and piston rings if broken (para. 3-47).

END OF TESTING!

23. ENGINE IDLE ROUGH, ERRATIC

Step 1. Check for incorrect fuel injector and valve adjustments.

a. Adjust injectors and/or valves as necessary (para. 3-82, 3-83, or 3-84).

b. Replace fuel injectors (paras. 5-6) if fuel injectors are defective.

c. Replace fuel pump if rough idle continues (para. 5-13).

Step 2. Perform malfunction 22, step 4 if rough idle and missing continues.

END OF TESTING!

24. ENGINE OVERSPEEDS

Replace fuel pump with calibrated replacement unit (para. 5-13).

END OF TESTING!

25. ENGINE LUBRICATING OIL DILUTED BY FUEL

Check for incorrect fuel injector adjustment and proper operation.

a. Adjust fuel injectors as necessary (para. 3-82, 3-83, or 3-84).

b. Clean or replace fuel injector(s) if defective (para. 5-6).

END OF TESTING!

26. ENGINE KNOCKS

Step 1. Check valve and injector timing (para. 3-82, 3-83, or 3-84).

Step 2. Perform malfunctions 21 and 22.

Step 3. Perform malfunction 18, step 5.

END OF TESTING!

Table 2-1. Mechanical Troubleshooting (Contd).

MALFUNCTION TEST OR INSPECTION CORRECTIVE ACTION

COOLING SYSTEM

WARNING

- Hot coolant is under pressure. Care should be used when removing coolant filler cap or inspecting hot engine coolant leaks. Steam or hot coolant under pressure may cause severe injury to personnel.
- Wear hand protection at all times when working with heated parts. Failure to do so may result in injury to personnel

27. LOSS OF COOLANT

Pressure test warm engine cooling system (TM 750-254). Observe pressure tester reading.

a. If pressure tester reading declines and there are no indications of external leaks, coolant is leaking internally into engine or combustion chambers. Check engine oil for presence of coolant. Remove oil dipstick. Coolant in oil requires inspection of engine crankshaft main and connecting rod bearings (paras. 3-47 and 3-48).

b. If coolant is present on oil dipstick, remove cylinder heads (para. 3-18). Inspect cylinder heads and gaskets, engine block, and cylinder liners for cracks or warpage.

(1) Replace or repair cylinder head(s) if cracked, warped, or damaged (para. 3-18 or 3-51).

(2) Replace cylinder liners if cracked (para. 3-50).

(3) Replace engine if block is cracked (para. 3-24).

END OF TESTING!

28. ENGINE COOLANT TEMPERATURE GAGE ABOVE 230°F (11O°C)

Step 1. Check coolant flow at surge tank.

Replace water pump if there is no evidence of coolant flow (para. 6-4).

Step 2. Perform troubleshooting (malfunction 27).

END OF TESTING!

CLUTCH

29. VEHICLE WILL NOT MOVE WITH CLUTCH ENGAGED

Check clutch operation. Place transfer case in neutral and transmission in first gear. Engage clutch.

a. Remove transmission if transmission-to-transfer propeller shaft will not turn (para. 8-4). Check pressure plate and clutch disc for defects. Replace pressure plate and clutch disc if defective (para. 4-2).

b. Remove pressure plate and clutch disc from flywheel (para. 4-2). Verify flywheel condition. Repair flywheel if flywheel is burned or damaged and damaged area removal permits flywheel to remain within specifications, otherwise replace flywheel (para. 3-21).

END OF TESTING!

Table 2-1. Mechanical Troubleshooting (Contd).

MALFUNCTION TEST OR INSPECTION CORRECTIVE ACTION

30. BURNING ODOR EVIDENT WITH CLUTCH ENGAGED

CAUTION

Clutch engagement followed by a burning odor indicates clutch improperly engaged and slipping. When this condition is evident, inspection of vehicle clutch operation is required immediately. Prolonged operation of vehicle under these conditions may result in damaged clutch disc, pressure plate, and flywheel.

NOTE

Light surface discoloration of pressure plate and flywheel contact surfaces may be removed with crocus cloth. Deeper discoloration and hard spots on flywheel may require replacement of part.

Check clutch condition.

a. Remove pressure plate and clutch disc (para. 4-2).

Clean with crocus cloth if flywheel or pressure plate surfaces are only slightly discolored or damaged. Machine new surface on flywheel to limiting thickness if damage is greater. Replace pressure plate if damage is more than minor (para. 4-2).

b. Remove release bearing and inspect (para. 4-3). Replace clutch disc and release bearing if defective (paras. 4-2 and 4-3).

c. If flywheel shows evidence of burned or hard spots, replace flywheel (para. 3-21).

END OF TESTING!

31. CLUTCH NOISY DURING ENGAGEMENT AND DISENGAGEMENT

WARNING

Hearing protection is required for driver, co-driver, and mechanic when engine is running. Noise levels produced by this vehicle exceed 85dB, which may cause injury to personnel.

Step 1. Check clutch noise. Place transmission in neutral. Start engine (TM 9-2320-260-10) and push clutch pedal to floor and release.

If noise increases when clutch pedal is depressed and released, remove transmission (para. 8-4) and inspect release bearing. Replace release bearing if defective (para. 4-3).

Step 2. Place transmission in first gear, start engine (TM 9-2320-260-10), and engage clutch.

a. If clutch noise increases when engaged, remove transmission (para. 8-4).

b. Remove and inspect pressure plate and clutch disc for defects (para. 4-2). Replace clutch disc or pressure plate if defective (para. 4-2).

c. Verify flywheel condition (para. 3-21). If flywheel shows evidence of burned or hard spots, replace flywheel (para. 3-21).

END OF TESTING!

Table 2-1. Mechanical Troubleshooting (Contd).

MALFUNCTION TEST OR INSPECTION CORRECTIVE ACTION

32. VIBRATION DURING CLUTCH ENGAGEMENT

CAUTION

Vibration during clutch engagement indicates a warped and/or burned pressure plate and flywheel. When this condition is evident, immediate vehicle clutch inspection is required. Prolonged vehicle operation may result in permanent damage of flywheel and damage to transmission.

Remove transmission (para. 8-4).

a. Inspect pressure plate and clutch disc (para. 4-2). Replace pressure plate and clutch disc if defective (para. 4-2).

b. Verify pilot bearing condition. Replace pilot bearing if defective (para. 4-2).

c. Remove pressure plate and clutch disc (para. 4-2). Verify flywheel condition. Replace flywheel if burned or damaged (para. 3-21).

END OF TESTING!

TRANSMISSION

33. ENGINE STALLS WHEN CLUTCH IS ENGAGED AND TRANSMISSION IS IN GEAR

Verify engine operation (malfunctions 6, 10, 11, 21, and 23).

END OF TESTING!

34. VEHICLE WILL NOT MOVE WHEN CLUTCH IS ENGAGED AND TRANSMISSION IS IN GEAR

Step 1. Verify clutch condition (malfunction 29).

Step 2. Complete troubleshooting (malfunction 30).

END OF TESTING!

35. EXCESSIVE NOISE DURING SHIFTING

Step 1. Check clutch condition (malfunctions 30 through 32). Perform steps 2 and 3 if noise is not from clutch system.

Step 2. Remove and inspect transmission (para. 8-4).

Repair or replace transmission if defective (para. 8-4 or 8-6).

Step 3. Check transfer case condition (malfunctions 38 through 42).

END OF TESTING!

36. TRANSMISSION OIL LEAKAGE

Check and verify approximate location of oil leak(s).

a. Replace top cover gasket if leaking (para. 8-7).

b. Replace PTO gasket if leaking (para. 16-40).

c. Replace transmission counter shaft bearing cover gasket if leaking (para. 8-6).

d. Replace transmission bearing cap gasket if leaking (para. 8-6).

Table 2-1. Mechanical Troubleshooting (Contd).

MALFUNCTION TEST OR INSPECTION CORRECTIVE ACTION

e. Replace rear companion flange oil seals if leaking (para. 8-6).

f. If transmission leak(s) continue, remove transmission (para. 8-4) and inspect (para. 8-6). Repair transmission (para. 8-6) or replace (para. 8-4) if unrepairable.

END OF TESTING!

37. TRANSMISSION GRINDS AND/OR POPS OUT OF GEAR DURING SHIFTING

Remove transmission top cover exposing shift forks, gears, and synchronizers (para. 8-7).

a. Remove transmission and repair if synchronizers are damaged (paras. 8-4 and 8-6).

b. Remove transmission and replace damaged gears (paras. 8-4 and 8-6).

END OF TESTING!

TRANSFER CASE

38. TRANSFER CASE WILL NOT OPERATE FRONT DIFFERENTIAL

Step 1. Check that twin poppet valves (on transmission) and air lines are supplying signals to transfer sprag air cylinder.

a. With air tanks full and engine off, loosen air lines at sprag air cylinder and listen for air leaking as transmission is shifted into forward and reverse gears.

b. Replace poppet valve(s) or air lines if air signals are weak or absent (para. 8-2).

Step 2. Repeat test in step la and listen for sprag clutch engagement in transfer sprag unit.

a. Replace transfer sprag air cylinder if forward and reverse sprag engagements are not heard (para. 9-2).

b. Repair sprag unit in transfer if sprag engagement is heard (para. 9-4).

END OF TESTING!

39. TRANSFER CASE WILL NOT OPERATE REAR DIFFERENTIALS

Step 1. Confirm transmission-to-transfer propeller shaft turns.

a. Proceed to step 2 if transmission-to-transfer propeller shaft can be turned with transmission and transfer case in neutral.

b. Proceed to differential and rear axle mechanical troubleshooting sections of TM 9-2320-260-20 if propeller shaft will not turn. If lockup is not in propeller shaft or axles, go to step 3.

Step 2. Confirm transfer-to-forward rear axle propeller shaft can be turned. Place transfer shifter into neutral and raise both rear wheels on one side of vehicle (TM 9-2320-260-20).

Remove and repair transfer case if propeller shaft turns (paras. 9-3 and 9-4).

Step 3. Remove and repair transfer case (paras. 9-3 and 9-4).

END OF TESTING!

Table 2-1. Mechanical Troubleshooting (Contd).

MALFUNCTION TEST OR INSPECTION CORRECTIVE ACTION

40. TRANSFER CASE OIL LEAKAGE

Step 1. Check transfer case-to-PTO oil feed line. Repair or replace oil feed line if feed line is leaking (para. 9-4).

Step 2. Check and verify approximate location of oil leaks.

a. Replace transfer front output flange oil seal if leaking (para. 9-4).

b. Replace transfer input flange oil seal if leaking (para. 9-4).

c. Replace transfer front output cover gasket if leaking (para. 9-4).

d. Replace transfer input shaft bearing cover gasket if leaking (para. 9-4).

e. Replace transfer housing gasket if leaking (para. 9-4).

f. Replace transfer rear output bearing cover gasket if leaking (para. 9-4). Remove parking brake (TM 9-2320-260-20) and replace gasket (para. 9-3).

g. Replace intermediate shaft rear bearing cover gasket if leaking (para. 9-3). Remove parking brake (TM 9-2320-260-20) and replace gasket (para. 9-3).

h. Replace rear output shaft oil seal if leaking (para. 9-3).

i. Replace rear output shaft bearing retainer gasket if leaking (para. 9-3). Remove parking brake (TM 9-2320-260-20).

j. Replace top cover gasket if leaking (para. 9-3).

k. Remove PTO if leaking oil. Repair oil leaks (malfunction 63).

l. Remove transfer case if leak(s) continues (para. 9-3). Disassemble and replace defective components or repair condition causing leak(s) (para. 9-4).

END OF TESTING!

41. TRANSFER CASE NOISY

Step 1. Confirm origin of noise.

a. Remove transmission-to-transfer propeller shaft and operate transmission in forward and reverse.

b. Noise is from transfer case if no noise is present during test.

Step 2. Disconnect transfer rear propeller shaft and front axle propeller shaft (TM 9-2320-260-20).

a. Turn transfer front input shaft and feel for looseness and roughness in three shift positions and when front axle is engaged and not engaged.

b. Remove transfer case if noise is present (para. 9-4). Disassemble transfer case and repair (para. 9-4).

c. If noise is not present, check differential for proper operation (malfunction 43).

END OF TESTING!

42. TRANSFER CASE GRINDS OR POPS OUT OF GEAR DURING NORMAL VEHICLE OPERATION

Step 1. Check condition and adjustment of transfer control linkages (TM 9-2320-260-20). Ensure shift shaft has good detent action. If so, proceed to step 2.

Step 2. Remove transfer case (para. 9-3). Repair transfer case if defective (para. 9-4).

END OF TESTING!

Table 2-1. Mechanical Troubleshooting (Contd).

MALFUNCTION TEST OR INSPECTION CORRECTIVE ACTION

DIFFERENTIAL

43. DIFFERENTIAL NOISY

Step 1. Check transfer case for proper operation (malfunction 41). Proceed to step 2 if noise is not from transfer case.

Step 2. Check differential for proper operation. Remove all differential propeller shafts (TM 9-2320-260-20). Manually turn wheels and observe differential action.

a. Remove differential from axle if wheels will not turn (para. 10-7).

b. Remove and inspect axles and bearings if wheels will not turn (TM 9-2320-260-20).

c. Disassemble and repair differential (para. 10-8).

END OF TESTING!

44. DIFFERENTIAL CLUNKS DURING TURNS OR INITIAL TAKEOFF

Step 1. Check front axle shafts and universal joints for defects (TM 9-2320-260-20). Remove and repair components if defective (TM 9-2320-260-20).

Step 2. Check differential internal operation. Repair differential (para. 10-8).

END OF TESTING!

45. DIFFERENTIAL VIBRATES

Complete troubleshooting malfunctions 43 and 44.

END OF TESTING!

46. DIFFERENTIAL LEAKS OIL

Step 1. Check condition of axle seals and flange gaskets (if used). Inspect drum area for presence of gear oil. Replace axle seals if gear oil is present in or on brakedrum (para. 10-3, front or TM 9-2320-260-20, rear).

Step 2. Check differential shafts seals condition. Inspect for presence of gear oil at gaskets and companion flange areas. Replace gaskets and seals if gear oil is present (para. 10-9).

Step 3. Check axle housing condition. Inspect axle housing for external evidence of gear oil.

a. Repair if axle housing(s) has pinhole leaks (TM 9-237) or replace axle housing (para. 10-2 or 10-5).

b. Replace axle housing(s) if damaged (para. 102 or 10-5).

END OF TESTING!

47. ABNORMAL TIRE WEAR (FRONT AXLE)

Step 1. Check steering knuckle sleeve bushings condition and end play.

a. Replace steering knuckle bushings if defective (para. 10-3).

b. Install proper spacers if end play is excessive (para. 10-3).

c. Replace sleeves or axle housing if end play is still excessive (para. 10-2).

Table 2-1. Mechanical Troubleshooting (Contd).

MALFUNCTION TEST OR INSPECTION CORRECTIVE ACTION

Step 2. Check front axle shafts and universal joints for defects (TM 9-2320-260-20).

Step 3. Check front-end alinement (TM 9-2320-260-20). Replace defective parts if front end cannot be alined (paras, 10-2 through 10-4, and TM 9-2320-260-20).

END OF TESTING!

48. ABNORMAL TIRE WEAR (REAR AXLE)

Check frame and suspension alinement (para. 13-6).

Replace defective parts if rear end cannot be alined (para. 10-5).

END OF TESTING!

STEERING GEAR

49. EXCESSIVE PLAY IN STEERING

Step 1. Check steering knuckle condition for defects (malfunction 47, step 1).

Step 2. Check condition of steering gear and steering assist cylinder for defects.

a. Adjust steering gear if play is excessive (para. 12-6).

b. Replace steering gear if steering gear play remains excessive (para. 12-5).

END OF TESTING!

50. VEHICLE SHIMMY (FRONT)

Complete troubleshooting malfunction 47, step 3 and malfunction 48.

END OF TESTING!

51. STEERING GEAR LEAKING OIL

Check oil leak and verify location.

a. Repair or replace fittings if leaking (TM 9-2320-260-20).

b. Replace steering gear if defective (para. 12-5).

END OF TESTING!

52. OIL LEAKING FROM POWER STEERING PUMP

Step 1. Check outlet fitting and reservoir O-rings for defects (TM 9-2320-260-20).

Step 2. Replace defective packing or lines (TM 9-2320-260-20).

END OF TESTING!

53. EXCESSIVE POWER STEERING PUMP NOISE

Replace power steering pump if defective (TM 9-2320-260-20).

END OF TESTING!

54. STEERING WHEEL HARD TO TURN

Step 1. Check power steering pump pressure (para. 12-6).

Replace power steering pump if pressure is abnormal (TM 9-2320-260-20).

Table 2-1. Mechanical Troubleshooting (Contd).

MALFUNCTION TEST OR INSPECTION CORRECTIVE ACTION

Step 2. Check for broken piston or piston rings in power steering assist cylinder.

a. Replace piston, piston rings, or seals if broken or defective (para. 12-7).

b. If steering wheel is still hard to turn, proceed to step 3.

Step 3. Check front axle for defective steering knuckle bushings (para. 10-3). Replace steering knuckle bushings if defective (para. 10-3).

END OF TESTING!

AIR COMPRESSOR

55. LOW AIR PRESSURE (NO AIR LEAKS, GOVERNOR PROPERLY ADJUSTED AND OPERATIVE)

Confirm low air gage reading. Tee in known good gage.

a. Replace air gage if test gage reads normal value (TM 9-2320-260-20).

b. Replace air compressor if test gage reads low air pressure (para. 11-3).

END OF TESTING!

56. AIR COMPRESSOR PASSES EXCESSIVE OIL (EXCESSIVE OIL BLED FROM AIR RESERVOIRS)

Slowly bleed and check reservoirs for evidence of oil (TM 9-2320-260- 10).

Replace air compressor if air tanks expel oil (para. 11-3).

END OF TESTING!

57. AIR COMPRESSOR DOES NOT UNLOAD (AIR GOVERNOR ADJUSTED AND OPERATIVE)

Check unloader valve and unloader valve spring for wear and defects.

Replace unloader valve or spring if worn or damaged (para. 11-4).

END OF TESTING!

58. AIR COMPRESSOR HEAD LEAKING WATER

Step 1. Ensure air compressor head fittings are correctly installed. Install air compressor head fittings correctly if necessary (TM 9-2320-260-20).

Step 2. Ensure screws securing head are at proper torque (TM 9-2320-260-20).

a. Tighten head screws if necessary (TM 9-2320-260-20).

b. Proceed to step 3 if compressor head still leaks coolant.

Step 3. Replace air compressor (para. 11-3).

END OF TESTING!

Table 2-1. Mechanical Troubleshooting (Contd).

MALFUNCTION TEST OR INSPECTION CORRECTIVE ACTION

POWER TAKEOFF

59. (TRANSMISSION-DRIVEN) POWER TAKEOFF INOPERATIVE

Step 1. Check transmission power takeoff (PTO). Engage transmission PTO and visually confirm output propeller shaft rotation.

a. Remove and inspect transmission PTO if transmission PTO output shaft is not rotating and transmission PTO is engaged (para. 16-40).

b. Repair or replace transmission PTO if defective (para. 16-40 or 16-41).

Step 2. Visually inspect transmission PTO drive gear for damage.

Repair transmission PI'O if drive gear is damaged (para. 16-41).

END OF TESTING!

60. (TRANSFER CASE-DRIVEN) POWER TAKEOFF INOPERATIVE

Step 1. Check transfer power takeoff (PTO). Engage and visually confirm output propeller shaft rotation. Proceed to step 2 if output propeller shaft is not turning.

Step 2. Remove transfer PTO (para. 16-43) and check condition of drive clutch half in transfer.

Replace clutch half if defective (para. 16-44 or 16-45).

Step 3. Disassemble and inspect shiftable transfer PTO.

Repair or replace defective parts (para. 16-44 or 16-45).

END OF TESTING!

61. POWER TAKEOFF SLIPS OUT OF GEAR

Step 1. Check shift linkages (TM 9-2320-260-20).

Replace defective parts and adjust (TM 9-2320-260-20).

Step 2. Replace poppet springs if malfunction continues.

a. Procedure applies to shift-type transfer PTO only (para. 16-44 or 16-45).

b. Procedure applies to both types of transmission PTO's (para. 16-41).

END OF TESTING!

62. TRANSMISSION POWER TAKEOFF LEAKS OIL

CAUTION

- When replacing gasket(s) between power takeoff and transmission housing, replace with the exact number of gaskets removed. Failure to use the correct number of new gaskets will affect power takeoff-to-transmission gears spacing and gear backlash. With incorrect gear backlash, equipment may be damaged.
- When power takeoff requires bearing or gear replacement, check power takeoff drive gear and transmission drive gear backlash. Failure to adjust backlash may result in damage to equipment.

Table 2-1. Mechanical Troubleshooting (Contd).

MALFUNCTION TEST OR INSPECTION CORRECTIVE ACTION

Verify oil leak location.

a. Replace transmission power takeoff (PTO) gasket if leaking oil (para. 16-40).

b. Remove transmission PTO (para. 16-40) and replace defective parts if shifter shaft seal, rear output shaft seal, input shaft seal, rear output shaft housing gasket, or input shaft bearing cover gasket leaks oil (para. 16-41).

c. Remove transmission PTO (para. 16-40) and replace damaged bearings or gears causing oil leaks (para. 16-41).

END OF TESTING!

63. TRANSFER CASE POWER TAKEOFF LEAKS OIL

Check oil feed line between transfer case and transfer power takeoff (PTO) for loose fittings or damaged lines (para. 16-44 or 16-45).

a. Tighten oil line fittings if loose. Replace if damaged (para. 16-43).

b. Replace damaged oil feed line if leaking (para. 16-43).

c. Replace transfer PTO gaskets and seals if leaking (para. 16-43). Repair if other parts are defective (para. 16-44 or 16-45).

END OF TESTING!

DUMP BODY

64. DUMP BODY WILL NOT RAISE

WARNING

Overhead lifting device capacity must exceed dump body weight. A shifting, swinging, or falling load may cause injury to personnel. Overhead lifting device must remain attached to dump body until troubleshooting is completed. Released dump body may fall and may cause injury to personnel.

Step 1. Apply parking brake (TM 9-2320-260-10).

WARNING

Use properly rated hydraulic hose when performing hydraulic systems checks on vehicles not equipped with dump body lock. Failure to do this may result in injury to personnel.

NOTE

- Some vehicles may not be updated to use dump body hydraulic lock system. When vehicles do not have this system, substitute hydraulic hose will be needed to take the place of existing hydraulic hose of lock system called out in hydraulic system checks.
- Tag all hydraulic hose ends of hydraulic lock system for installation.

Table 2-1. Mechanical Troubleshooting (Contd).

MALFUNCTION TEST OR INSPECTION CORRECTIVE ACTION

Step 2. Check hydraulic lock operation. Operate controls to raise dump body (TM 9-2320-260-10). Observe hydraulic lock operation.

a. If hydraulic lock will not release, manually open hydraulic lock and secure in open position. Operate dump body to raise. Replace hydraulic cylinder or lock assembly if dump body raises (para. 15-15 or 15-16).

b. Check control valve and relay control box if dump body will not raise with hydraulic lock open (paras. 15-19 and 15-20).

Step 3. Check control box operation. Move main control lever in cab and observe control box levers movement.

If control box lever will not operate control valve lever through full travel, check control box lever for defective woodruff key(s). Replace woodruff key(s) if defective (para. 15-19).

WARNING

- Bleed hydraulic pressure before cracking hydraulic lines. Failure to do so may result in damage to equipment and injury to personnel.
- Overhead lifting device capacity must exceed dump body weight. A swinging, shifting, or falling load may cause injury to personnel.

Step 4. Check hydraulic system for leaks.

a. Tighten or replace hydraulic hose fittings if leaking (para. 15-20).

b. Replace hydraulic hoses if leaking (para. 15-20).

Step 5. Attach overhead lifting device to dump body and secure dump body hydraulic lock. Raise dump body with lifting device until dump body is in fully raised position. Secure dump body with safety braces (TM 9-2320-260-10).

Step 6. Remove all hydraulic hose ends from hydraulic pump only. Install tee fitting into one of three open ports of hydraulic pump and plug two ports in hydraulic pump. Install high pressure gage into tee. Remove one hydraulic hose from lock cylinder and adapt ends to connect to tee and other open port on pump.

Step 7. Operate dump body with main control lever (set in D position) (TM 9-2320-260-10). Maintain engine speed at 1000 rpm for 10 seconds and observe pressure gage.

a. Remove hoist pump adapter and clean or replace stuck or broken springs, relief valve, or plunger if pressure reading is uneven or zero (para. 15-17).

b. Replace hoist pump adapter if defective (para. 15-17).

Step 8. Replace hoist pump if pressure reading is uneven or zero (para. 15-17).

Step 9. Replace control valve if pressure readings decrease slowly (para. 15-19).

Step 10. Check hoist cylinders operation. Remove safety braces and lower dump body until seated on subframe. Remove lifting device. Operate dump body to raised position (TM 9-2320-260-10).

a. Check hoist safety latch position if dump body will not raise. Replace hoist safety latch if not in release position (para. 15-16).

b. Replace hoist cylinders if dump body remains inoperative (para. 15-15).

END OF TESTING!

Table 2-1. Mechanical Troubleshooting (Contd).

MALFUNCTION TEST OR INSPECTION CORRECTIVE ACTION

65. DUMP BODY WILL NOT LOWER

WARNING

- Overhead lifting device capacity must exceed dump body weight. A shifting, swinging, or falling load may cause injury to personnel. Overhead lifting device must remain attached to dump body until troubleshooting is completed. Released dump body may fall and may cause injury to personnel.
- All personnel must stand clear of dump body during lowering test. Falling dump body may cause injury to personnel.

NOTE

Dump body lowering operation should be checked after each completed troubleshooting check.

Step 1. Apply parking brake (TM 9-2320-260-10).

Step 2. Attach overhead lifting device to dump body with sufficient slack to show slight downward movement.

Step 3. Check hydraulic lock cylinder hose valve to ensure that each shutoff is open at upper manifold.

Step 4. Perform troubleshooting malfunction 64, step 2.

Step 5. Check hoist cylinder hoses for restrictions. Clean or replace hydraulic hose(s) if restricted (para. 15-15).

Step 6. Check control valve lever operation (malfunction 64, step 3).

Step 7. Check control valve for restrictions. Remove and inspect (para. 15-19).

Clean or replace control valve if restricted (para. 15-19).

Step 8. Check hoist cylinders (malfunction 64, step 10). Repair hydraulic cylinders if defective (para. 15-15). Remove lifting device.

END OF TESTING!

66. DUMP BODY WILL NOT HOLD IN RAISED POSITION

Step 1. Perform troubleshooting malfunction 64, steps 3 through 10.

Step 2. Check hoist cylinders if defective (para. 15-15).

Repair hoist cylinders if defective (para. 15-15).

END OF TESTING!

MEDIUM WRECKER CRANE (M816)

67. CRANE BOOM FAILS TO SWING (OTHER HYDRAULIC SYSTEMS OPERATE SATISFACTORILY)

Step 1. Perform pressure check (TM 9-2320-260-20). Tee test gage into swing motor hydraulic control line. Operate swing control valve.

a. Proceed to malfunction 68, steps 2 and 3 if pressure is low or erratic.

b. Proceed to step 2 if pressure is steady and sufficient.

Table 2-1. Mechanical Troubleshooting (Contd).

MALFUNCTION TEST OR INSPECTION CORRECTIVE ACTION

Step *2.* Check crane turntable and bearing (para. 16-26).

Replace defective parts if mechanical blockage is evident (para. 16-26). Proceed to step 3 if crane turntable and bearing are satisfactory.

Step *3.* Replace swing hydraulic motor (para. 16-15).

END OF TESTING!

68. CRANE SWINGS ERRATICALLY

Step 1. Perform pressure check (TM 9-2320-260-20). Tee test gage into swing motor hydraulic control line. Operate swing control valve.

a. Proceed to malfunction 67, steps 2 and 3 if hydraulic oil pressure is steady.

b. Proceed to step 2 if hydraulic line pressure is erratic.

Step *2.* Tee test gage into control valve input pressure line. Confirm control valve input pressure.

a. Repair control valve if pressure is steady (TM 9-2320-260-20).

b. Proceed to step 3 if pressure is erratic or low.

Step 3. Check engine tachometer. Set throttle for 1200 rpm.

a. Replace hoist hydraulic pump if tachometer is steady (para. 16-24).

b. Proceed to malfunction 8 if tachometer is erratic.

END OF TESTING!

69. BOOM FAILS TO EXTEND OR RETRACT (OTHER HYDRAULIC SYSTEMS OPERATE SATISFACTORILY)

Step 1. Check for upper, internal, and lower rollers binding (TM 9-2320-260-20). Adjustor repair roller assemblies if defective (para. 16-13).

Step 2. Perform pressure check (TM 9-2320-260-20). Tee into line at boom extension cylinder and connect test gage.

a. Repair boom extension cylinder if pressure is sufficient (para. 16-20).

b. Perform malfunction 68, steps 2 and 3 if pressure is low or erratic.

END OF TESTING!

70. BOOM EXTENDS OR RETRACTS SLUGGISHLY

Perform pressure check (TM 9-2320-260-20). Tee into line at boom extension cylinder and connect test gage.

a. Perform malfunction 69, step 1.

b. Repair boom extension cylinder if pressure is sufficient (para. 16-20).

c. Perform malfunction 68, steps 2 and 3 if pressure is low or erratic.

END OF TESTING!

71. HOIST WINCH FAILS TO ROTATE, OPERATES TOO SLOWLY, OR OPERATES ERRATICALLY

Perform pressure check (TM 9-2320-260-20), Pay out some slack in hoist winch cable. Tee test gage in wind-in winch hydraulic line. Operate winch to wind in cable.

a. Replace hoist winch hydraulic motor if pressure is sufficient and steady (para. 16-15).

b. Proceed to malfunction 68, steps 2 and 3 if pressure is low or erratic.

END OF TESTING!

Table 2-1. Mechanical Troubleshooting (Contd).

MALFUNCTION TEST OR INSPECTION CORRECTIVE ACTION

72. BOOM FAILS TO RAISE OR RAISES AND LOWERS SLUGGISHLY

Step 1. Perform pressure check (TM 9-2320-260-20). Tee into hydraulic lift line crossover and tee in test gage.

a. Proceed to step 2 if pressure is sufficient.

b. Proceed to malfunction 68, steps 2 and 3 if pressure is low or erratic.

WARNING

All personnel must stand clear during lifting operations.
A swinging or shifting load may cause injury to personnel.

Step 2. Determine if one or both boom elevating cylinders are defective by disconnecting boom elevating cylinders from boom (para. 16-14) and raising boom with suitable lifting device. Operate control valve (TM 9-2320-260-10) and determine if one or both boom elevating cylinders are defective.

Replace boom elevating cylinder(s) if defective (para. 16-14).

END OF TESTING!

TRACTOR WRECKER (M819)

NOTE

Tractor wrecker crane hydraulic systems are tested the same as medium wrecker, except boom swing system.

73. CRANE BOOM FAILS TO SWING (OTHER HYDRAULIC SYSTEMS OPERATE SATISFACTORILY)

Step 1. Determine if problem is in hydraulic or mechanical system. Attempt to rotate boom and boom support with hydraulic pump turned off.

a. Proceed to step 2 if boom rotates easily and smoothly.

b. Proceed to step 3 if boom does not rotate easily or smoothly.

Step 2. Tee into swing motor hydraulic control line and connect test gage. Operate swing control valve.

a. Replace swing hydraulic motor if pressure is steady and sufficient (para. 16-30).

b. Perform malfunction 68, steps 2 and 3 if pressure is low or erratic.

Step 3. Check crane base, bearings, and pivot post for mechanical binding or obstruction.

Repair base, bearings, or pivot post if binding or damaged (para. 16-34).

END OF TESTING!

HYDRAULIC LIFTGATE (M820A2)

74. LIFTGATE WILL NOT OPEN OR CLOSE

Step 1. Check pump pressure (TM 9-2320-260-20). Tee into pump output hydraulic line and connect test gage. Operate liftgate controls.

Replace auxiliary pump if output pressure is low (para. 15-56).

Step 2. Check operation of control valve.

Clean or replace control valve if defective (para. 15-58).

Step 3. Check if grasp locks are sticking or linkage is binding.

Replace control linkage or locks if defective (para. 15-55).

END OF TESTING!

Table 2-1. Mechanical Troubleshmting (Contd).

MALFUNCTION TEST OR INSPECTION CORRECTIVE ACTION

75. PLATFORM DOES NOT STOP AT PROPER HEIGHT

Check elevating kickout screw.

a. Adjust kickout screw for correct height (para. 15-52).

b. Replace kickout screw if defective (para. 15-52).

END OF TESTING!

76. LIFTGATE AT INCORRECT ANGLE WHEN CLOSED

Step 1. Check for bent or obstructed control linkage.

Replace control linkage parts if damaged (para. 15-55).

Step 2. Check kickout screw adjustment in lowered position.

Adjust kickout screw as necessary (para. 15-52).

END OF TESTING!

77. LIFTGATE FAILS TO OPERATE ON REMOTE CONTROL

Step 1. Check detent springs.

Replace detent springs if broken or missing (para. 15-55).

Step 2. Check for power failure at auxiliary pump.

Replace auxiliary pump if defective (para. 15-56).

END OF TESTING!

78. LIFTGATE FAILS TO OPERATE ON MANUAL (LEVER) CONTROL

Step 1. Check if detent springs drop out of detent position.

Replace detent springs if broken or missing (para. 15-55).

Step 2. Check control linkage adjustment.

a. Adjust control linkage (para. 15-55).

b. Replace parts if damaged (para. 15-55).

END OF TESTING!

WINTERIZATION KITS

ENGINE COOLANT HEATER

79. HEATER DOES NOT START

Step 1. Remove heater from vehicle (TM 9-2320-260-20) and perform bench test (para. 17-12).

Replace all defective parts (paras. 17-3 through 17-12).

Step 2. Replace burner (para. 17-10).

END OF TESTING!

80. BLOWER RUNS IN START POSITION; HEATER FAILS TO IGNITE

Step 1. Test fuel control valve (para. 17-12).

Replace fuel control valve if defective (para. 17-7).

Table 2-1. Mechanical Troubleshooting (Contd).

MALFUNCTION TEST OR INSPECTION CORRECTIVE ACTION

Step 2. Check for defective igniter components.

Replace igniter component(s) if defective (para. 17-3, 17-8, or 17-9).

END OF TESTING!

81. HEATER STARTS, BUT FAILS TO RUN

Test for defective fuel control valve and overheat switch (para. 17-12).

Replace fuel control valve or overheat switch if defective (para. 17-7 or 17-8).

END OF TESTING!

82. HEATER RUNS CONTINUOUSLY IN HIGH OR LOW HEAT

Step 1. Check for defective diode.

Replace diode if defective (para. 17-6).

Step 2. Check for defective restriction thermostat.

Replace restriction thermostat if defective (para. 17-5).

END OF TESTING!

83. HEATER OVERHEATS

Test fuel control valve and overheat switch (para. 17-12).

Replace fuel control valve or overheat switch if defective (para. 17-7 or 17-8).

END OF TESTING!

84. BLOWER DOES NOT STOP WHEN HEATER IS SHUT OFF

Test flame detector switch (para. 17-12).

Adjust or replace flame detector switch (para. 17-3).

END OF TESTING!

PERSONNEL HEATERS

NOTE

Both personnel heaters, model 10530-A24 and 10530B are included in malfunction steps 85 through 94, except where noted.

85. HEATER FAILS TO START

Step 1. Remove heater from vehicle (TM 9-2320-260-20) and perform bench test (para. 17-25).

Step 2. Check for defective igniter components.

Replace igniter component(s) (para. 17-15, 17-18, or 17-19).

END OF TESTING!

86. FUEL BURNING HEATERS FAIL TO TURN ON

Step 1. Remove heater from vehicle for bench test (TM 9-2320-260-20).

Step 2. Bench test for defective fuel control valve (para. 17-25).

Replace fuel control valve if defective (para. 17-16).

Step 3. Perform electrical wire continuity tests (TM 9-2320-260-20, Electrical Troubleshooting).

Repair wires and connectors if defective (TM 9-2320-260-20).

END OF TESTING!

Table 2-1. Mechanical Troubleshooting (Contd).

MALFUNCTION TEST OR INSPECTION CORRECTIVE ACTION

87. FUEL BURNING HEATERS OVERHEAT - OVERHEAT SWITCH IS GOOD

Step 1. Check for obstructed air flow.

Clear obstructions from fuel supply lines and air and ventilating air passages if obstructed.

Step 2. Check fuel control valve (para. 17-25).

Replace fuel control valve if defective (para. 17-16).

END OF TESTING!

88. FUEL BURNING HEATERS OVERHEAT - CONTINUE TO BURN

Test overheat switch (para. 17-25).

Replace overheat switch if defective (para. 17-22).

END OF TESTING!

89. HEATER OUTPUT TOO LOW

Step 1. Check for obstructed fuel lines or contaminated fuel supply.

a. Clear fuel supply lines if obstructed (TM 9-2320-260-20).

b. Drain fuel control valve (para. 17-16).

Replace fuel control valve if defective (para. 17-16).

Step 2. Check fuel control valve (para. 17-25).

Replace fuel control valve if defective (para. 17-16).

END OF TESTING!

90. HEATER SMOKES AND BANGS WHEN STARTING

Perform malfunction 89, step 2.

END OF TESTING!

91. BLOWER WILL NOT STOP AFTER TURN OFF

Check flame detector switch condition (para. 17-25).

Replace flame detector switch if defective (para. 17-15).

END OF TESTING!

92. ODOR OF FUEL IN VENTILATING AIR (PERSONNEL HEATER ONLY)

Step 1. Check for leaking fuel connections at stand pipe and fuel valve.

Tighten connections if loose.

Step 2. Check burner O-ring and gasket.

Replace O-ring and gasket if defective (para. 17-21).

END OF TESTING!

Table 2-1. Mechanical Troubleshooting (Contd).

MALFUNCTION TEST OR INSPECTION CORRECTIVE ACTION

93. BLOWER RUNS BUT HEATER FAILS TO IGNITE

Step 1. Test igniter (para. 17-25).

Replace igniter if defective (para. 17-18).

Step 2. Check fuel control valve (para. 17-25).

Replace fuel control valve if defective (para. 17-16).

Step 3. Check for obstructed ignition air passages.

Clear ignition air passages of obstructions.

END OF TESTING!

94. HEATER SMOKES DURING NORMAL OPERATION

Step 1. Check for contaminated fuel.

Check external fuel system for contaminated fuel (TM 9-2320-260-20). Refill with fresh fuel.

Step 2. Check for slow blower motor operation (para. 17-25).

Replace blower motor if defective (para. 17-20).

Step 3. Test fuel control valve (para. 17-25).

Replace fuel control valve if defective (para. 17-16).

END OF TESTING!

WINCHES

95. CLUTCH WILL NOT ENGAGE DRUM (FRONT AND MIDSHIP WINCHES)

Step 1. Check shifter shaft and clutch.

a. Remove end case and disassemble (para. 16-2).

b. Remove rust and dried lubricant, lubricate, reassemble, and install end case on winch (para. 16-2).

Step 2. Check for mechanical obstruction if clutch handle moves short distance and then clatters.

Remove end case and disassemble. Inspect clutch and drum jaws for burrs, breaks, and misalignment. Repair winch if defective (para. 16-2).

END OF TESTING!

96. WINCH NOISY UNDER LOAD

Step 1. Check drum for radial free play.

Replace bushings if radial free play is present (para. 16-2 or 16-8).

Step 2. Check wormshaft radial free play.

Disassemble gearcase, inspect, and replace parts if defective (para. 16-2 or 16-8).

Step 3. Check automatic brake.

Replace brakeshoe if defective (para. 16-2 or 16-8).

END OF TESTING!

Table 2-1. Mechanical Troubleshooting (Contd).

MALFUNCTION TEST OR INSPECTION CORRECTIVE ACTION

97. DRUM OVERRUNS CABLE OR CABLE COILS LOOSEN WHEN PAYING OUT CABLE (FRONT AND MIDSHIP WINCHES)

Check drag brake adjustment (TM 9-2320-260-20).

Replace drag brake if noisy or no adjustment remains (para. 16-6).

END OF TESTING!

98. WINCH (ALL TYPES) DOES NOT HOLD LOAD WHEN POWER RELEASED

Step 1. Check automatic brake adjustment.

Adjust automatic brake as necessary (TM 9-2320-260-20).

Step 2. Check for presence of burned odor.

Replace automatic brakeshoe if defective (para. 16-2 or 16-8).

Step 3. Automatic brake does not hold load after adjustment.

Replace automatic brake shoe if defective and inspect drum (para. 16-2 or 16-8).

END OF TESTING!

99. WINCH (ALL TYPES) LEAKS OIL

Step 1. Check for defective oil seals and gaskets.

Replace oil seals and gaskets if defective (para. 16-2 or 16-8).

Step 2. Check for cracked covers and housings.

Replace covers and housings if cracked (para. 16-2 or 16-8).

END OF TESTING!

100. REAR WINCH OPERATES AT ONE SPEED ONLY

Check throttle control linkage and cable for proper operation.

Replace throttle control cable and linkage parts if damaged or cannot be adjusted (TM 9-2320-260-20).

END OF TESTING!

Section III. GENERAL MAINTENANCE INSTRUCTIONS

2-7. GENERAL MAINTENANCE INSTRUCTIONS INDEX

Publications which provide additional information on general shop practice, techniques, preservation, welding, sheet metal work, etc., are listed in Appendix A, References, of this manual. To find a particular general service instruction, use the instruction index below.

PARA. NO.	TITLE	PAGE NO.
2-8.	Cleaning	2-33
2-9.	Inspection	2-35
2-10.	Repair	2-36
2-11.	Assembly - Precautionary Rules	2-38
2-12.	Painting and Refinishing	2-38

2-8. CLEANING

a. General Instructions. Cleaning procedures will be the same for the majority of parts and components which make up the vehicle subassemblies. General cleaning procedures are detailed in “b” through "k.”

b. The Importance of Cleaning. Great care and effort are required in all cleaning operations. The presence of dirt and foreign material is a constant threat to satisfactory vehicle operation and maintenance. The following will apply to all cleaning operations:

(1) Clean all parts before inspection, after repair, and before assembly.

(2) Hands must be kept free of any accumulation of grease which can collect dust and grit.

(3) After cleaning, all parts must be covered or wrapped in plastic or paper to protect them from dust and/or dirt.

WARNING

Compressed air source will not exceed 30 psi (207 kPa). When cleaning with compressed air, eyeshields must be worn. Failure to wear eyeshields may result in injury to personnel.

c. External Engine Cleaning. All electrical equipment and other parts that could be damaged by steam cleaning or moisture must be removed and all openings must be covered before cleaning. Dry with compressed air.

d. Disassembled Parts Cleaning.

(1) Place all disassembled parts in wire basket(s) for cleaning.

(2) Dry and cover all cleaned parts.

(3) Place parts on or in “racks” and hold for inspection or repair.

(4) All parts subject to rusting must be lightly oiled and wrapped.

(5) Keep all related parts and components together. Do not mix parts.

2-8. CLEANING (Contd)

WARNING

Improper cleaning methods and use of unauthorized cleaning solvents may injure personnel and damage equipment. Refer to TM 9-247 for correct information.

e. **Castings.**

(1) Clean inner and outer surfaces of castings, and all areas subject to grease and oil, with cleaning solvents (TM 9-247).

(2) Use a stiff brush to remove sludge and gum deposits.

WARNING

Compressed air source will not exceed 30 psi (207 kPa). When cleaning with compressed air, eyeshields must be worn. Failure to wear eyeshields may result in injury to personnel.

(3) Use compressed air to blow out all tapped screw holes and to dry castings after cleaning.

f. Oil Passages. Particular attention must be given to all oil passages in castings and machined parts. Oil passages must be clean and free of any obstructions.

(1) Clean passages with soft wire probes to breakup any sludge or gum deposits.

(2) Wash passages by flushing with solvents (TM 9-247).

(3) Dry passages with compressed air.

CAUTION

Do not allow drycleaning solvents to come in contact with seals, cables, or flexible hoses. These solvents cause leather, rubber, and synthetic materials to dry out, rot, and lose pliability, making them unserviceable.

g. Oil Seals, Electrical Cables, and Flexible Hoses. Clean with soap and water.

h. Bearings.

(1) Bearings require special cleaning. After removing surface oil and gum deposits, place bearings in hot oil 140°F (60°C) to loosen congealed oil and grease. Wipe bearings dry; do not use compressed air. After cleaning, coat bearings with oil, wrap in paper, and hold for inspection.

(2) Refer to TM 9-214 for information on care of bearings.

WARNING

Drycleaning solvent is flammable and will not be used near open flame. Use only in well-ventilated places. Failure to do so may result in injury to personnel.

i. Machine Tooled Parts. Clean with drycleaning solvent and dry with compressed air.

j. Machined Surfaces. Clean with drycleaning solvent and dry with lint-free cloth.

2-8. CLEANING (Contd)

WARNING

Do not use compressed air or a dry brush for cleaning when working in areas of vehicle where asbestos brake lining dust may accumulate. Remove asbestos dust and other residue from these areas using a soft bristle brush or cloth soaked with water. Breathing asbestos dust may cause injury to personnel.

k. Brake Lining Surfaces. Clean all components where brake lining (asbestos) dust could accumulate with a wet nonspray process. Bulk oil-based residues can be removed by scraping followed by wiping with cleaning solvent soaked rag.

2-9. INSPECTION

a. General Instructions. Procedures for inspections will be the same for many parts and components which make up the vehicle subassemblies. General procedures are detailed in "b" through "q." Dimensional standards for parts have been fixed at extremely close tolerances, so use specification tables. Use specified inspection equipment for inspection where cracks and other damage cannot be spotted visually. Exercise extreme care in all phases of inspection.

b. Castings.

(1) Inspect all ferrous and nonferrous castings for cracks using a magnifying glass and strong light.

(2) Refer to MIL-I-6866, Inspection, Liquid Penetrant Methods, and MIL-I-6868, Inspection Process, Magnetic Particles.

(3) Particularly check areas around studs, pipe plugs, threaded inserts, and sharp corners. Replace all cracked castings.

(4) Inspect machined surfaces for nicks, burrs, or raised metal. Mark damaged areas for repair or replacement.

(5) Inspect all pipe plugs, pipe plug openings, screws, and screw openings for damaged or stripped threads.

(6) Check all gasket mating surfaces, flanges on housings, and supports for warpage with a straightedge or surface plate. Inspect mating flanges for discolorations which may indicate persistant oil leakage.

(7) Check all castings for conformance to applicable repair standards.

c. Bearings. Refer to TM 9-214 for inspection of bearings. Check all bearings for conformance to applicable repair standards.

d. Studs, Bolts, and Screws. Replace if bent, loose, stretched, or threads are damaged.

e. Gears.

NOTE

When gear teeth wear limits are not established, good judgement is required to determine if gear replacement is necessary.

(1) Inspect all gears for cracks using a magnifying glass and strong light. No cracks are allowed.

(2) Inspect gear teeth for wear, sharp fins, burrs, and galled or pitted surfaces.

(3) Check keyway slots for wear and/or damage.

(4) Check oil holes for obstructions.

2-9. INSPECTION (Contd)

f. Bushings and Bushing-Type Bearings.

(1) Check all bushings and bushing-type bearings for secure fit, evidence of overheating, wear, (oversize inner diameter) burrs, nicks, and out-of-round condition.

(2) Check for dirt in lubrication holes or grooves. Holes and grooves must be clean and free from damage.

(3) If bushing or bearing has been spun in bore, measure bore to determine extent of damage. Bore of casting or forging may not retain new bushing/bearing when subjected to load.

g. Oil Seals. Oil seals are mandatory replacement items.

h. Core Hole Expansion Plugs. Inspect for leakage. Replace plugs when leakage is present.

i. Machine Tooled Parts. Inspect for cracks, breaks, elongated holes, wear, and chips.

j. Machined Surfaces. Inspect for cracks, evidence of wear, galled or pitted surfaces, burrs, nicks, scratches, and evidence of overheating.

k. Mated Surfaces. Inspect for remains of old gasket or seal, secure fit, pitting, and evidence of leakage.

l. Rusted Surfaces. Inspect for pitting, holes, and severe damage.

m. Oil Bathed Internal Parts. Inspect for cracks, nicks, burrs, evidence of overheating, and wear.

n. Air-Actuated Internal Parts. Inspect for cracks, nicks, burrs, corrosion, evidence of overheating, and wear.

o. External Exposed Parts. Inspect for breaks, cracks, rust damage, and wear.

p. Springs. Inspect for broken, collapsed, and twisted coils.

q. Shafts and Hubs.

(1) Check for cracks, especially at lubrication passages, keyways, and screw holes (threaded or unthreaded). Cracks also occur at grooves where shafts or hubs have dimension changes.

(2) When shafts or hubs have bearing or bushing failures, make careful dimension measurements and check for mounting surface damage from contaminated lubrication or overheating.

2-10. REPAIR

a. General Instructions. Repair of most parts and components is limited to general procedures outlined in applicable maintenance instructions and detailed procedures “b” through “h.”

CAUTION

Repaired items must be thoroughly cleaned to remove metal chips and abrasives. Metal chips and abrasives can enter working parts of vehicle and cause damage to equipment.

b. Castings.

(1) All cracked castings will be replaced.

(2) Only minor repairs to machined surfaces, flanges, and gasket mating surfaces are permitted. Remove minor nicks, burrs, and/or scratches with:

2-10. REPAIR (Contd)

(a) Fine mill file.

(b) Crocus cloth dipped in cleaning solvent.

(c) Lapping across a surface plate.

(3) Remachining of machined surfaces to repair damage, warpage, or uneven surfaces is not permitted. Replace castings.

(4) Repair damaged pipe plug and/or screw threads with a tap. Repair oversize holes with threaded inserts. Follow instructions on package or refer to MS 33537.

c. Bearings. Refer to TM 9-214.

d. Studs. Replace all bent and stretched studs. Repair minor thread damage with a thread die. Replace studs having stripped or damaged threads as outlined below:

(1) Remove using a stud remover. Back studs out slowly to avoid heat buildup and seizure which can cause stud to break off.

CAUTION

Refer to TM 9-237, Operator's Manual for Welding Theory and Application, to avoid damage to castings if welding method is used.

(2) If studs break off too short to use a stud remover, drill and use a stud extractor to remove or use "welding method."

(3) Broken studs can be removed by welding bar stock or a nut to stud and removing with wrench.

NOTE

Standard studs may have a coarse thread on one end and a fine thread on the other end. The coarse thread end is installed in the aluminum casting. Studs having coarse threads on both ends are used in some applications. The shorter threaded end goes into the casting. Refer to TM 9-2320-260-34P for correct part numbers.

(4) Replacement studs have a special coating and must have a small amount of antiseize compound (MIL-A-907) applied on threads before stud is installed. Install replacement stud slowly to prevent heat buildup and stud snapping off.

e. Gears and Splined Parts.

(1) Remove gears using pullers.

(2) Use the same methods described in paragraph 2-10b. for castings to remove minor nicks, burrs, or scratches on gear teeth.

(3) Do not machine gear or spline teeth to repair defects. Replace part.

(4) Pitted, ridged, chipped, and cracked gear or spline teeth are unrepairable. Replace part.

(5) If keyways are worn or enlarged, replace gear or shaft.

f. Bushings and Bushing-Type Bearings. When bushings and bushing-type bearings seize to a shaft and spin in the bore, the part containing the bushing bore must be carefully checked for out-of-round condition due to shaft or bushing backing damage. Do not install new bushing in out-of-round or oversize bore. Replace part.

2-10. REPAIR (Contd)

g. Oil Seals.

(1) Remove oil seals by pressing, pulling, or prying out. Be careful not to damage casting or adapter bore.

(2) Always install new seal in bore using proper seal replacing tool.

h. Cylinder Head - Cylinder Block. Repair of cylinder head and cylinder block is limited to procedures outlined in this manual.

i. Shafts.

(1) Parts showing evidence of overheating (especially discoloration) are not repairable; replace part.

(2) Minor corrosion at seal contact surface can be repaired. Pitting is unrepairable; replace part.

2-11. ASSEMBLY – PRECAUTIONARY RULES

a. Cleanliness is essential in all component assembly operations. Dirt and dust, even in small quantities, is abrasive. Parts must be cleaned as specified and kept clean. Wrap or cover parts and components when assembly procedures are not immediately completed.

b. Coat all bearings and contact surfaces with operating oil (axle oil for axle parts, transmission oil for transmission parts, etc.) after repair to ensure lubrication of parts during initial operation.

c. Use new gaskets and preformed packings during assembly of all components. Follow instructions on package for prelubricated seals.

d. Torque values and limits are listed and illustrated in Appendix F.

e. Press fit operations require proper prelubrication of contact surfaces and care to maintain alinement of mating parts and pressure tooling. Always follow press equipment operation instructions.

2-12. PAINTING AND REFINISHING

All painting shall be performed in accordance with the following publications:

- Camouflage Materials (Field Manufacturing Techniques) . . . . . TM 5-200
- Paint Instructions for Field Use . . . . . TM 43-0139
- Color, Marking, and Camouflage Painting of Military Vehicles, Construction Equipment, and Materials Handling Equipment . . . . . TB 43-0209

CHAPTER 3
ENGINE MAINTENANCE

Section I. Description and Data (page 3-1)
Section II. Engine (In-Vehicle) Maintenance (page 3-5)
Section III. Engine Replacement (page 3-76)
Section IV. Engine Disassembly into Subassemblies (page 3-107)
Section V. Engine Repair (page 3-136)
Section VI. Engine Assembly from Subassemblies (page 3-177)
Section VII. Engine Valve and Injector Maintenance (page 3-216)

Section I. DESCRIPTION AND DATA

3-1. DESCRIPTION

a. The Cummins NHC-250 diesel engine is used on all M809 series vehicles. It is a naturally-aspirated, liquid cooled, overhead valve, four-cycle engine of in-line, six-cylinder design. The NHC-250 engine has a compression ratio of 15.8 to 1 and develops 240 horsepower at 2100 rpm. Peak torque is 560 lb-ft. at 1600 rpm.

b. Both early model engines, before serial number 1124663, and late model engines, after serial number 1124663, are covered in this chapter. The differences between early and late models are changes to make the clean air configuration and the use of top stop fuel injectors. Changes to the clean air configuration provide for controlled engine exhaust gas recirculation back to the air intake manifold. The top stop fuel injectors are different from early model engine injectors in that the adapter is lower to accommodate the stop. The plunger coupling top is smaller and has an adjustable stop screw and locknut. Further description and data on fuel injectors can be found in chapter 4 of this manual.

3-2. DATA (Contd)

Left and right views of the Cummins NHC-250 engine and its components are shown for both early and late model engines. Identification can be made from the engine identification plate on the left side of front gearcase cover.

NOTE

This is a left front three-quarter view of engine.

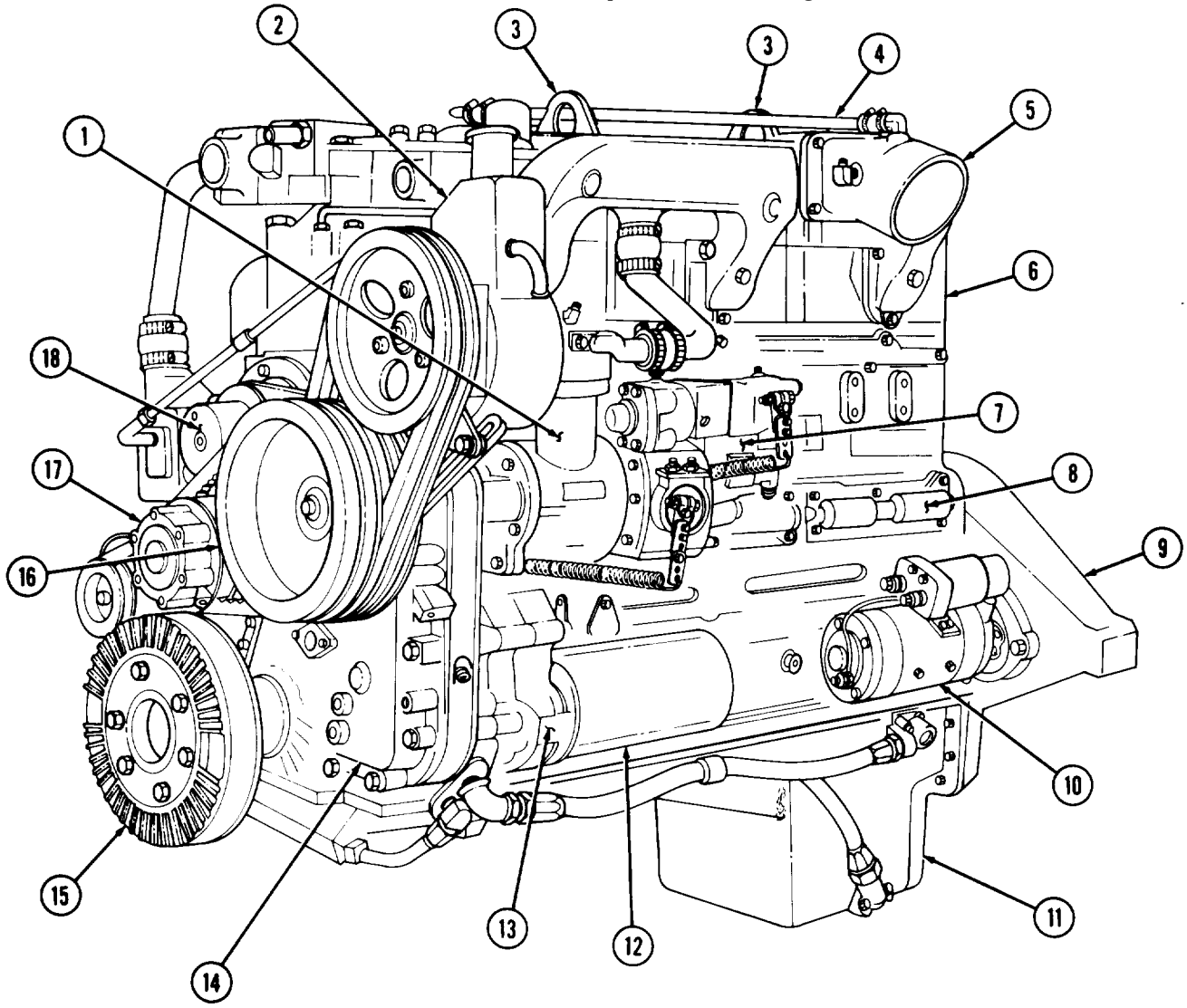

1. Power steering pump
2. Air compressor
3. Engine lifting brackets
4. Crankcase breather tube (Late model engine)
5. Air intake manifold
6. Cylinder head
7. Fuel pump
8. Cam follower housing
9. Flywheel housing
10. Starter motor
11. Oil pan
12. Oil filter
13. Oil pump
14. Front gearcase cover
15. Vibration damper
16. Accessory drive pulley
17. Fan pulley
18. Water pump

3-2. DATA (Contd)

Left and right views of the Cummins NHC-250 engine and its components are shown for both early and late model engines. Identification can be made from the engine identification plate on the left side of front gearcase cover. For additional engine data, see table 3-1.

NOTE

This is a right rear three-quarter view of engine.

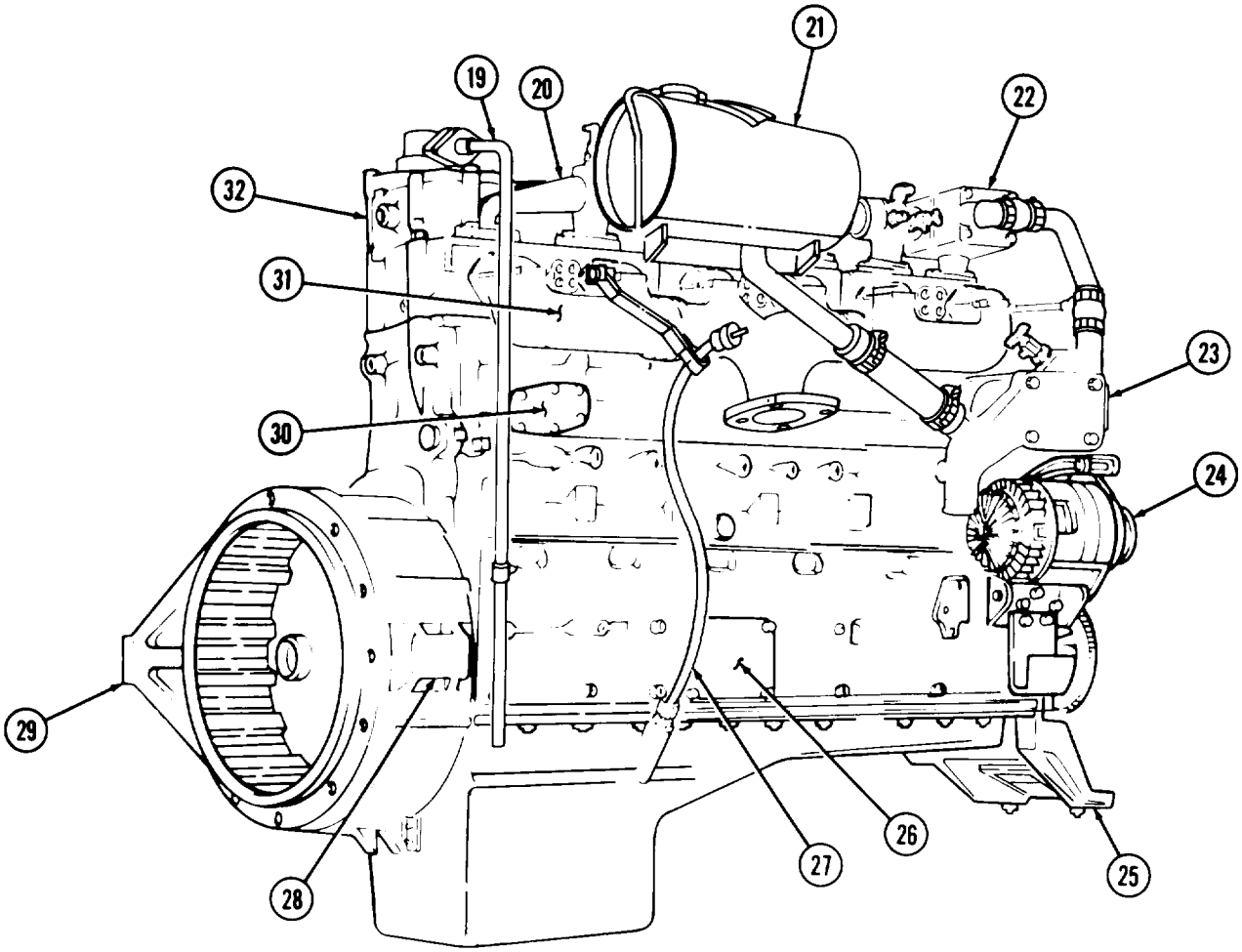

19. Crankcase breather tube (Early model engine)
20. Water manifold
21. Surge tank
22. Thermostat housing
23. Engine oil cooler
24. Alternator
25. Front mount bracket
26. Access cover plate
27. Oil gage (dipstick and tube)
28. Right rear engine mount
29. Left rear engine mount
30. Water header cover plate
31. Exhaust manifold
32. Rocker lever housing

3-2. DATA (Contd)

Table 3-1. Engine Tabulated Data.

1. ENGINE

Make	Cummins
Model	NHC-250
Type	Four-cycle diesel, valve in-head, in-line compression ignition
Weight (dry)	2510 lb (1140 kg)
Number of cylinders	6
Type of cylinders	Wet (replacement sleeve)
Bore and stroke	5.5 x 6 in. (140 x 152 mm)
Displacement	855 cu. in. (14 L)
Horsepower (gross)	240@ 2100 rpm
Compression ratio	15.8 to 1
Number of pistons	6
Number of rings per piston	4 (3 compression, 1 oil)
Crankshaft rotation	Clockwise (viewed from front)
Firing order	1-5-3-6-24
Oil pressure (idle)	15-20 psi 103-138 kPa
Oil pressure normal operating speeds	30-70 psi (207-483 kPa)
Engine operating temperature	175°-195°F (79°-90°C)
Crankcase capacity	W/O filter 24.0 qts (23 L), W/filter 28.0 qts (25 L)
Governed speed (no load)	2400 rpm
Governed speed (full load)	2100 rpm
Idle speed (all except wrecker body)	550-600 rpm
Idle speed (wrecker body)	600-650rpm

2. OIL PUMP

Make	Cummins
Type	Gear-type, double lubricated
Driven by	Crankshaft
Capacity	19 rpm (72 lpm) @ 2100 rpm

3. WATER PUMP

Make	Cummins
Type	Centrifugal
Driven by	Two belts
Capacity	96 gpm (363 lpm) @ 2100 rpm

Section II. ENGINE (IN-VEHICLE) MAINTENANCE

3-3. ENGINE (IN-VEHICLE) MAINTENANCE INDEX

PARA. NO.	TITLE	PAGE NO.
3-4.	Water Header Plates Replacement	3-6
3-5.	Vibration Damper Maintenance	3-7
3-6.	Crankshaft Flange Maintenance	3-10
3-7.	Fan Hub Repair	3-14
3-8.	Accessory Drive Pulley Replacement	3-18
3-9.	Accessory Drive Maintenance	3-20
3-10.	Intake Manifold Maintenance	3-24
3-11.	Exhaust Manifold Replacement	3-28
3-12.	Oil Cooler Maintenance	3-30
3-13.	Lifting Brackets Replacement	3-36
3-14.	Rocker Lever Housing Covers Replacement	3-37
3-15.	Rocker Lever Housing and Push Tubes Maintenance	3-38
3-16.	Valve Crosshead Maintenance	3-46
3-17.	Fuel Crossover Connectors Replacement	3-48
3-18.	Cylinder Heads Replacement	3-49
3-19.	Cam Follower Housing Maintenance	3-51
3-20.	Oil Pan Maintenance	3-60
3-21.	Flywheel and Gear Replacement	3-66
3-22.	Flywheel Housing Maintenance	3-70

3-4. WATER HEADER PLATES REPLACEMENT

THIS TASK COVERS:

a. Removal **b. Installation**

INITIAL SETUP

APPLICABLE MODELS
All

TOOLS
General mechanic's tool kit
(Appendix B, Item 1)

MATERIALS/PARTS
Gasket (Appendix D, Item 115)
Six screw-assembled lockwashers
(Appendix D, Item 406)

REFERENCES (TM)
LO 9-2320-260-12
TM 9-2320-260-10
TM 9-2320-260-20
TM 9-2320-260-34P-1

EQUIPMENT CONDITION
- Hood raised and secured (TM 9-2320-260-10).
- Radiator drained (TM 9-2320-260-20).

a. Removal

Remove six screw-assembled lockwashers (1), water header plate (2), and gasket (3) from cylinder block (4). Discard screw-assembled lockwashers (1) and gasket (3).

b. Installation

Install new gasket (3) and water header plate (2) on cylinder block (4) with six new screw-assembled lockwashers (1).

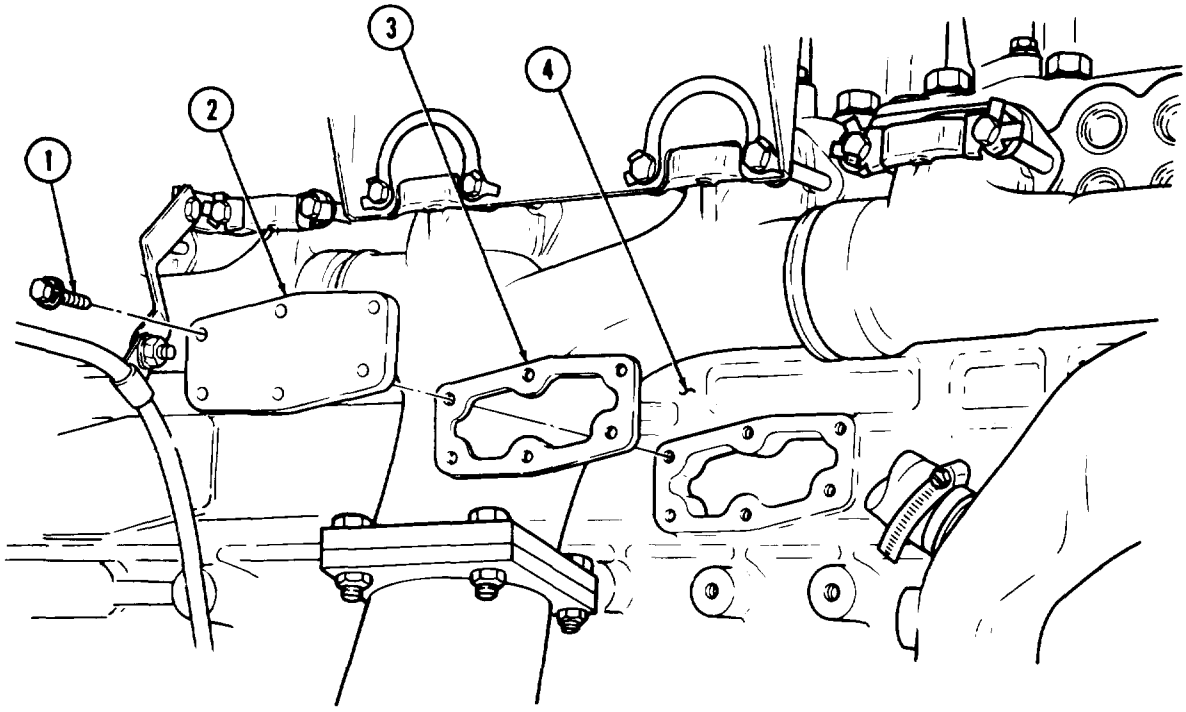

FOLLOW-ON TASKS:
- Fill engine oil to proper level (LO 9-2320-260-12).
- Start engine (TM 9-2320-260-10) and check for leaks.

3-5. VIBRATION DAMPER MAINTENANCE

THIS TASK COVERS:

a. Check Runout and Wobble
b. Removal
c. Inspection
d. Installation

INITIAL SETUP

APPLICABLE MODELS
All

SPECIAL TOOLS
Engine barring tool (Appendix B, Item 66)

TOOLS
General mechanic's tool kit (Appendix B, Item 1)
Torque wrench, 3/8-in. dr. (Appendix B, Item 4)
Dial indicator (Appendix B, Item 11)
Soft-head hammer (Appendix B, Item 47)

MATERIALS/PARTS
Six lockwashers (Appendix D, Item 223)

REFERENCES (TM)
TM 9-2320-260-10
TM 9-2320-260-20
TM 9-2320-260-34P-1

EQUIPMENT CONDITION
- Fuel valve in off position (TM 9-2320-260-10).
- Fan blade removed (TM 9-2320-260-20).
- Battery ground cables disconnected (TM 9-2320-260-20).

GENERAL SAFETY INSTRUCTIONS
Make sure fuel shutoff valve and ignition switch are OFF before cranking engine.

a. Check Runout and Wobble

WARNING

Ensure fuel shutoff valve and ignition switch are OFF before cranking engine. Failure to do so may result in injury to personnel.

1. Check vibration damper (2) for runout:
   a. Position dial indicator with holding fixture on engine (1).
   b. Position dial indicator plunger on edge of flange (3) and zero dial indicator.
   c. Using engine barring tool, rotate vibration damper (2) and take reading. Replace vibration damper (2) if reading exceeds 0.025 in. (0.64 mm).

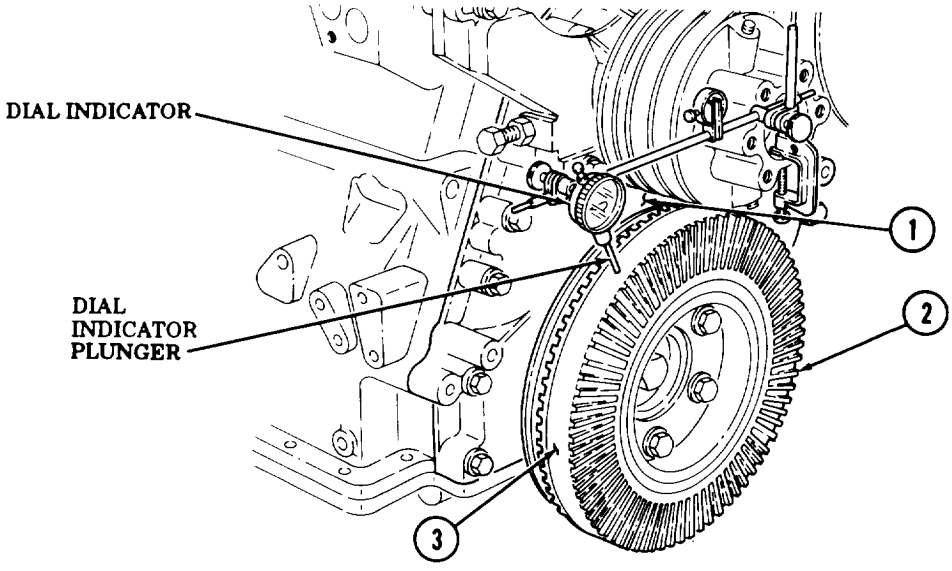

3-5. VIBRATION DAMPER MAINTENANCE (Contd)

2. Check vibration damper (1) for wobble:

NOTE

- Crankshaft must be kept at front or rear limit of thrust while checking vibration damper wobble.
- An assistant using a prybar can keep crankshaft at front limit of thrust.

a. Place dial indicator with holding fixture on engine (3).

b. Position dial indicator plunger at surface (2) of vibration damper (1) and zero dial indicator.

c. Rotate vibration damper (1) using engine barring tool and take reading. Replace vibration damper (1) if reading exceeds 0.004 in. (0.102 mm).

b. Removal

1. Remove six screws (6) and lockwashers (5) from vibration damper (1) and crankshaft flange (4). Discard lockwashers (5).
2. Loosen vibration damper (1) by tapping with soft-head hammer and remove from crankshaft flange (4).

c. Inspection

1. Inspect vibration damper (1) for cracks and breaks. Replace vibration damper (1) if cracked or broken.
2. Aline and check vibration damper inner (7) and outer (8) alinement marks are not more than 0.625 in. (15.88 mm). Replace vibration damper (1) if alinement marks are not alined.

d. Installation

1. Position vibration damper (1) on crankshaft flange (4). Use soft-head hammer if necessary.
2. Install vibration damper (1) on crankshaft flange (4) with six new lockwashers (5) and screws (6). Tighten screws (6) 55-60 lb-ft (75-81 NŽm).

3-5. VIBRATION DAMPER MAINTENANCE (Contd)

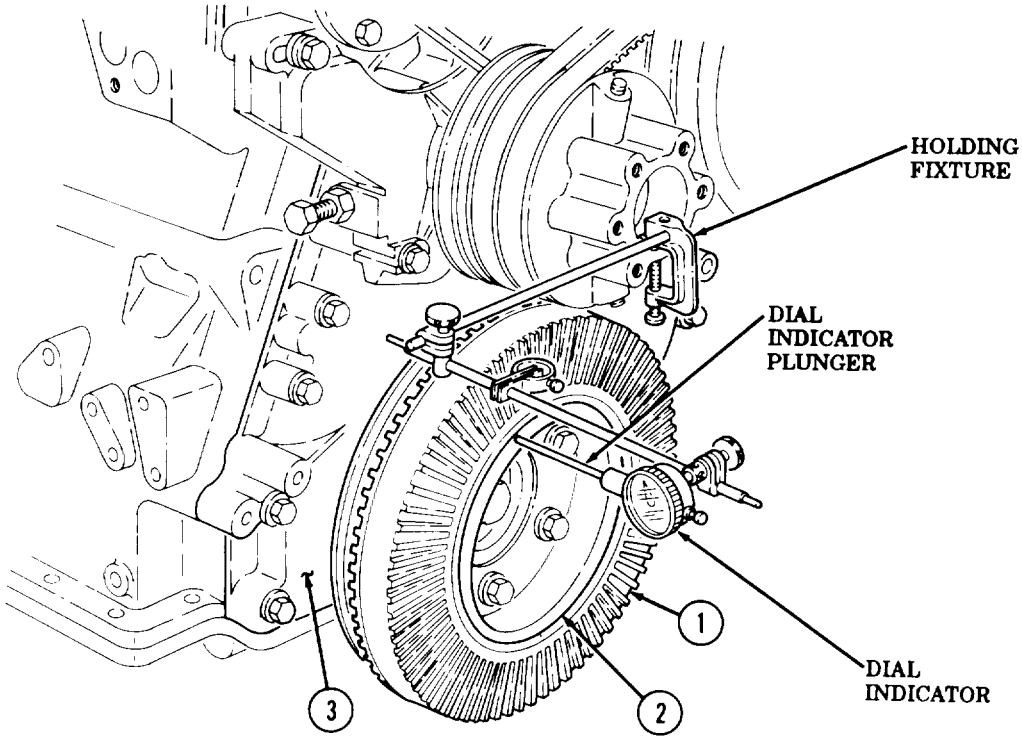

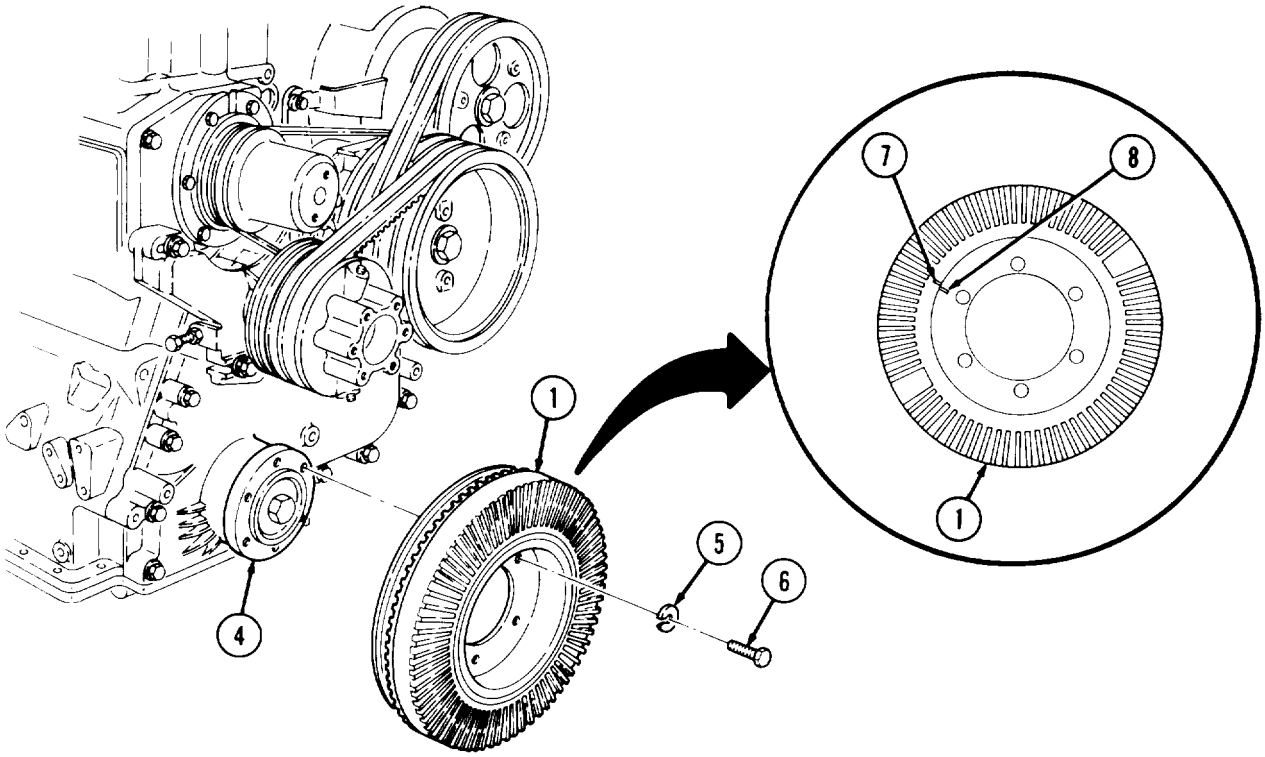

FOLLOW-ON TASKS:
- Install fan blade (TM 9-2320-260-20).
- Connect battery ground cables (TM 9-2320-260-20).

3-6. CRANKSHAFT FLANGE MAINTENANCE

THIS TASK COVERS:

a. Removal
b. Installation
c. Check Runout and Wobble

INITIAL SETUP

APPLICABLE MODELS
All

SPECIAL TOOLS
Crankshaft flange puller (Appendix B, Item 67)
Engine barring tool (Appendix B, Item 66)

TOOLS
General mechanic's tool kit (Appendix B, Item 1)
Torque wrench, 1/2-in. dr. (Appendix B, Item 3)
Dial indicator (Appendix B, Item 11)

MATERIALS/PARTS
Lubricating oil (Appendix C, Item 21)

REFERENCES (TM)
TM 9-2320-260-10
TM 9-2320-260-34P-1

EQUIPMENT CONDITION
- Parking brake set (TM 9-2320-260-10).
- Vibration damper removed (para. 3-5).

GENERAL SAFETY INSTRUCTIONS
Make sure fuel shutoff valve and ignition switch are OFF before cranking engine.

a. Removal

1. Remove screw (4) and washer (3) from crankshaft flange (2) and crankshaft (1).
2. Install screw (4) in crankshaft (1) three turns.
3. Using crankshaft flange puller, separate crankshaft flange (2) from crankshaft (1).
4. Remove screw (4) and crankshaft flange (2) from crankshaft (1).

b. Installation

1. Coat inside of crankshaft flange (2) with lubricating oil.
2. Install crankshaft flange (2) on crankshaft (1) and check for run out and wobble (refer to task c).
3. Install washer (3) and screw (4) on crankshaft flange (2) and crankshaft (1). Tighten screw (4) 180-200 lb-ft (244-271 NŽm).

3-6. CRANKSHAFT FLANGE MAINTENANCE (Contd)

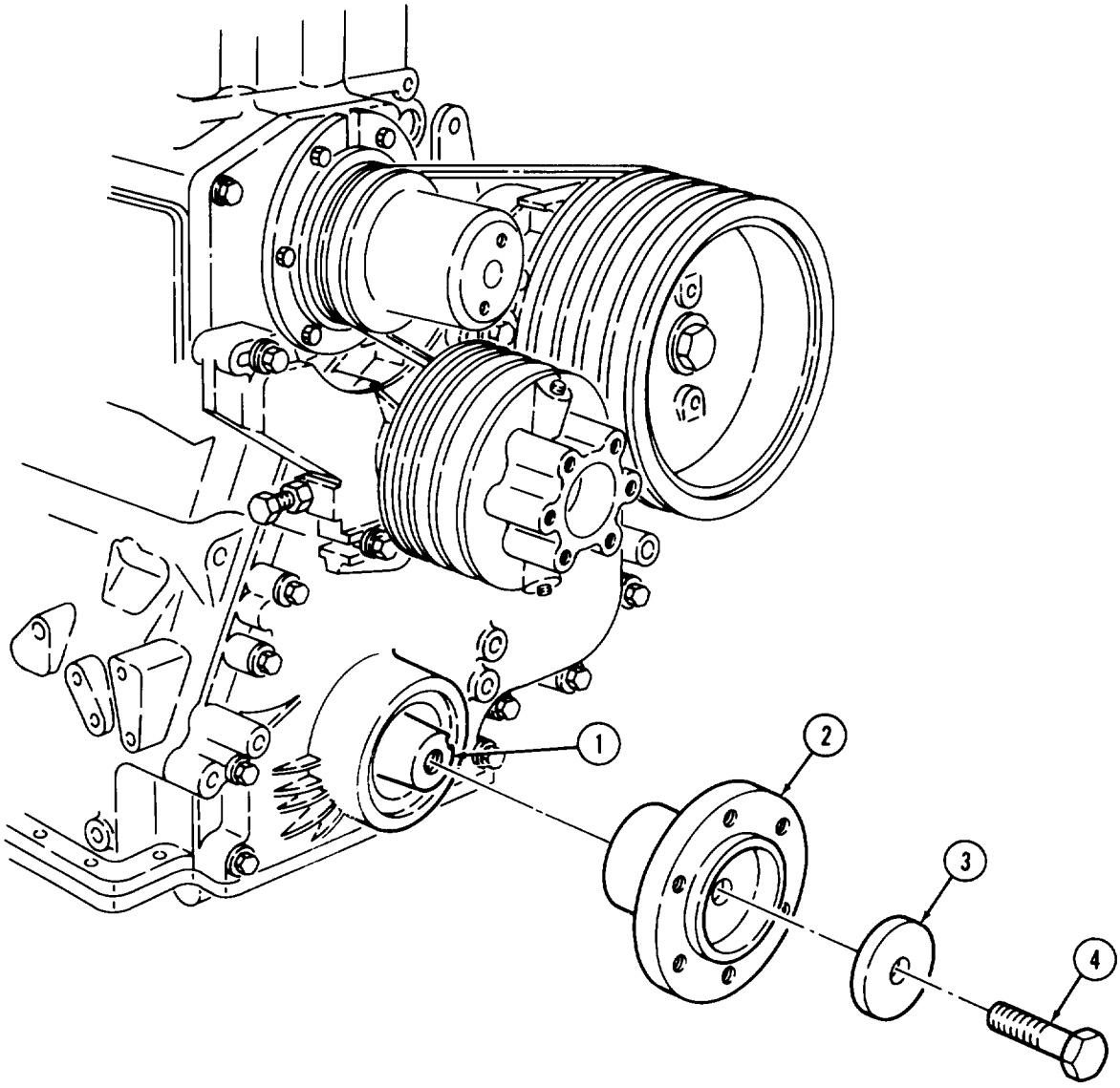

3-6. CRANKSHAFT FLANGE MAINTENANCE (Contd)

c. Check Runout and Wobble

WARNING

Ensure fuel shutoff valve and ignition switch are OFF before cranking engine. Failure to do so may result in injury to personnel.

1. Check crankshaft flange (2) for runout:
   a. Position dial indicator with holding fixture on engine (1).
   b. Position dial indicator plunger on hub of crankshaft flange (2) and zero dial indicator.
   c. Using engine barring tool, rotate engine (1) and take reading. Replace crankshaft flange (2) if reading is more than 0.004 in. (0.10 mm). Crankshaft may be damaged.

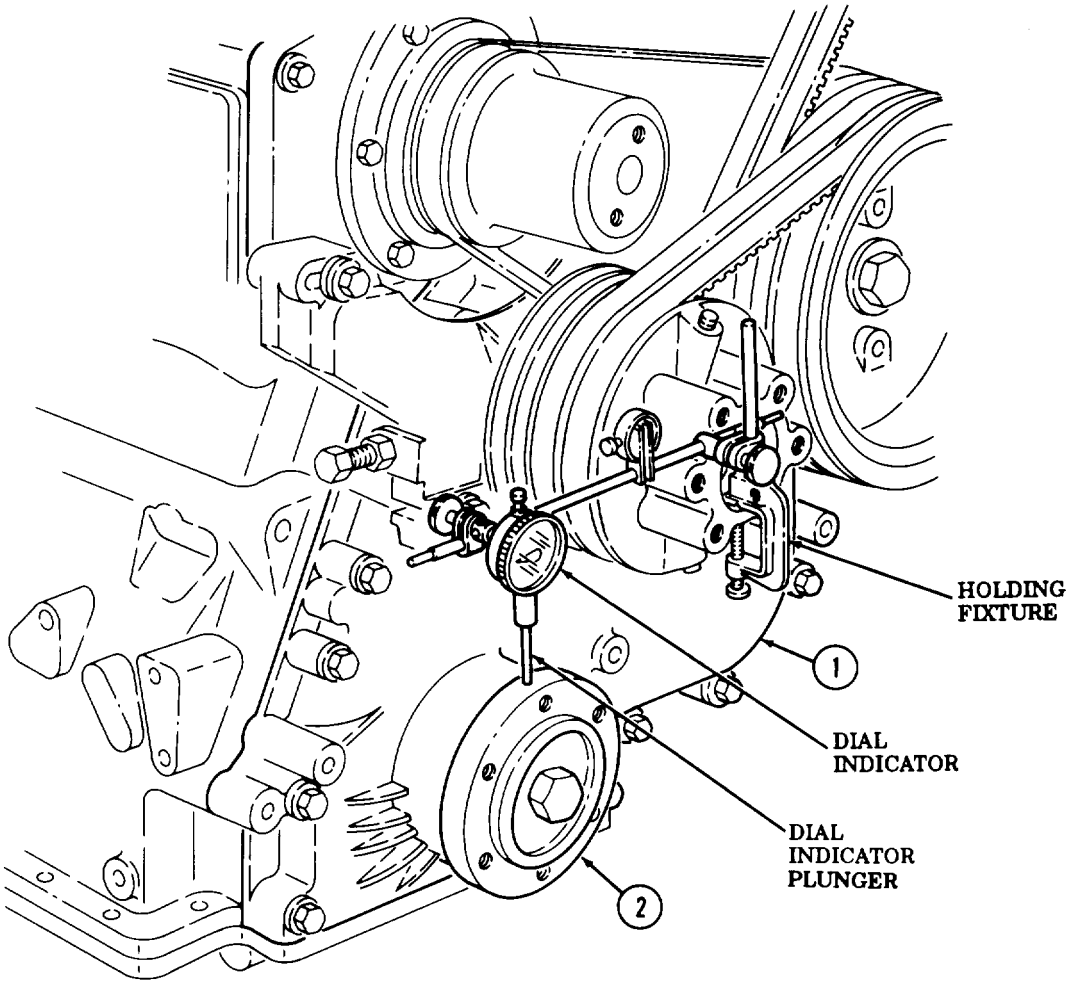

3-6. CRANKSHAFT FLANGE MAINTENANCE (Contd)

2. Check crankshaft flange (2) for wobble:

NOTE

- Crankshaft must be kept at front or rear limit of thrust while checking crankshaft flange wobble.
- An assistant using a prybar can keep crankshaft at front limit of thrust.

a. Position dial indicator with holding fixture on engine (1).

b. Position dial indicator plunger on face of crankshaft flange (3) and zero dial indicator.

c. Using engine barring tool, rotate engine (1) and take reading. Replace crankshaft flange (2) if reading exceeds 0.004 in. (0.10 mm) after 360 degree rotation of crankshaft flange (2). If wobble persists, crankshaft maybe damaged.

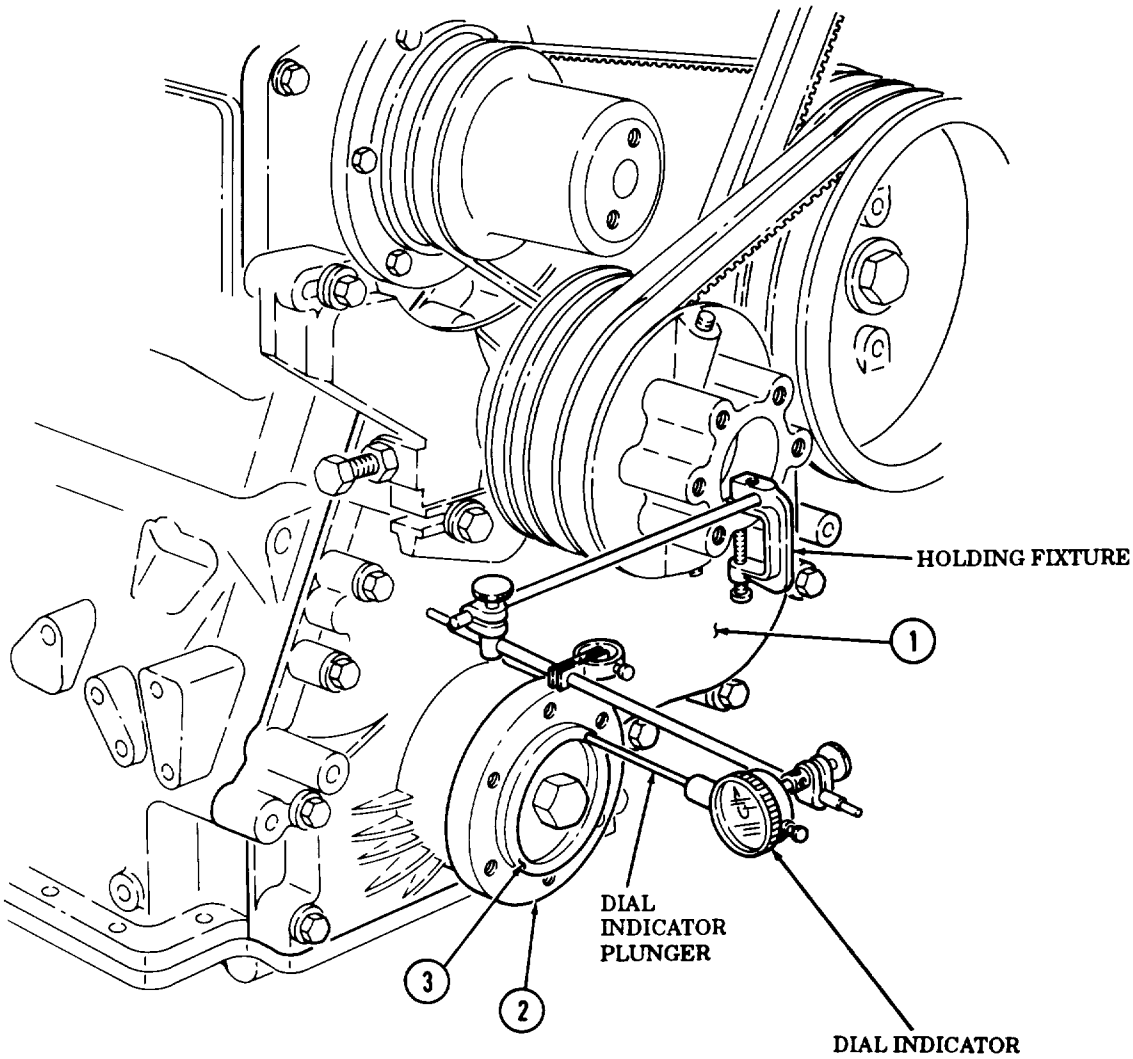

FOLLOW-ON TASK: Install vibration damper (para. 3-5).

3-7. FAN HUB REPAIR

THIS TASK COVERS:

a. Disassembly
b. Cleaning and Inspection
c. Assembly

INITIAL SETUP

APPLICABLE MODELS
All

TOOLS
General mechanic's tool kit (Appendix B, Item 1)
Bearing remover/replacer (Appendix B, Item 83)

MATERIALS/PARTS
Cotter pin (Appendix D, Item 29)
Seal (Appendix D, Item 440.1)
Gasket (Appendix D, Item 58.1)
GAA grease (Appendix C, Item 14)

MATERIALS/PARTS (Contd)
Lubricating oil (Appendix C, Item 21)
Antiseize tape (Appendix C, Item 50)

REFERENCES (TM)
TM 9-2320-260-20
TM 9-2320-260-34P-1

EQUIPMENT CONDITION
Fan bracket removed (TM 9-2320-260-20).

GENERAL SAFETY INSTRUCTIONS
Use care when removing fan blade.

a. Disassembly

1. Remove cotter pin (6), nut (5), and key washer (4) from hub pulley (3) and fan bracket (1). Discard cotter pin (6).
2. Remove hub pulley (3) from fan bracket (1).
3. Remove seal (2) from hub pulley (3). Discard seal (2),
4. Using bearing puller, remove outer bearing (9) and race (10) from hub pulley (3).
5. Using bearing puller, remove inner bearing (12) and race (11) from hub pulley (3).
6. Remove two plugs (8) from hub pulley (3).

b. Cleaning and Inspection

1. For general cleaning instructions, refer to para. 2-8.
2. For general inspection instructions, refer to para. 2-9.
3. Inspect bracket shaft (7) for nicks, burrs, breaks, and wear. Refer to table 3-2, Bracket Shaft Wear Limits, for measurements. Replace fan bracket (1) if damaged or worn.

3-7. FAN HUB REPAIR (Contd)

4. Inspect hub pulley (3) for cracks, breaks, burrs, nicks, and stripped threads. Repair stripped threads or replace hub pulley (3) if cracked, broken, burred, or nicked.

Table 3-2. Bracket Shaft Wear Limits.

ITEM NO.	ITEM/POINT OF MEASUREMENT	WEAR LIMITS/Tolerances	
		INCHES	MILLIMETERS
A	Outer diameter	1.1250 – 1.1260	28.576-28.600
B	Outer diameter	1.1805 – 1.1815	29.985-30.010
C	Outer diameter	1.7490-1.7515	44.425-44.488

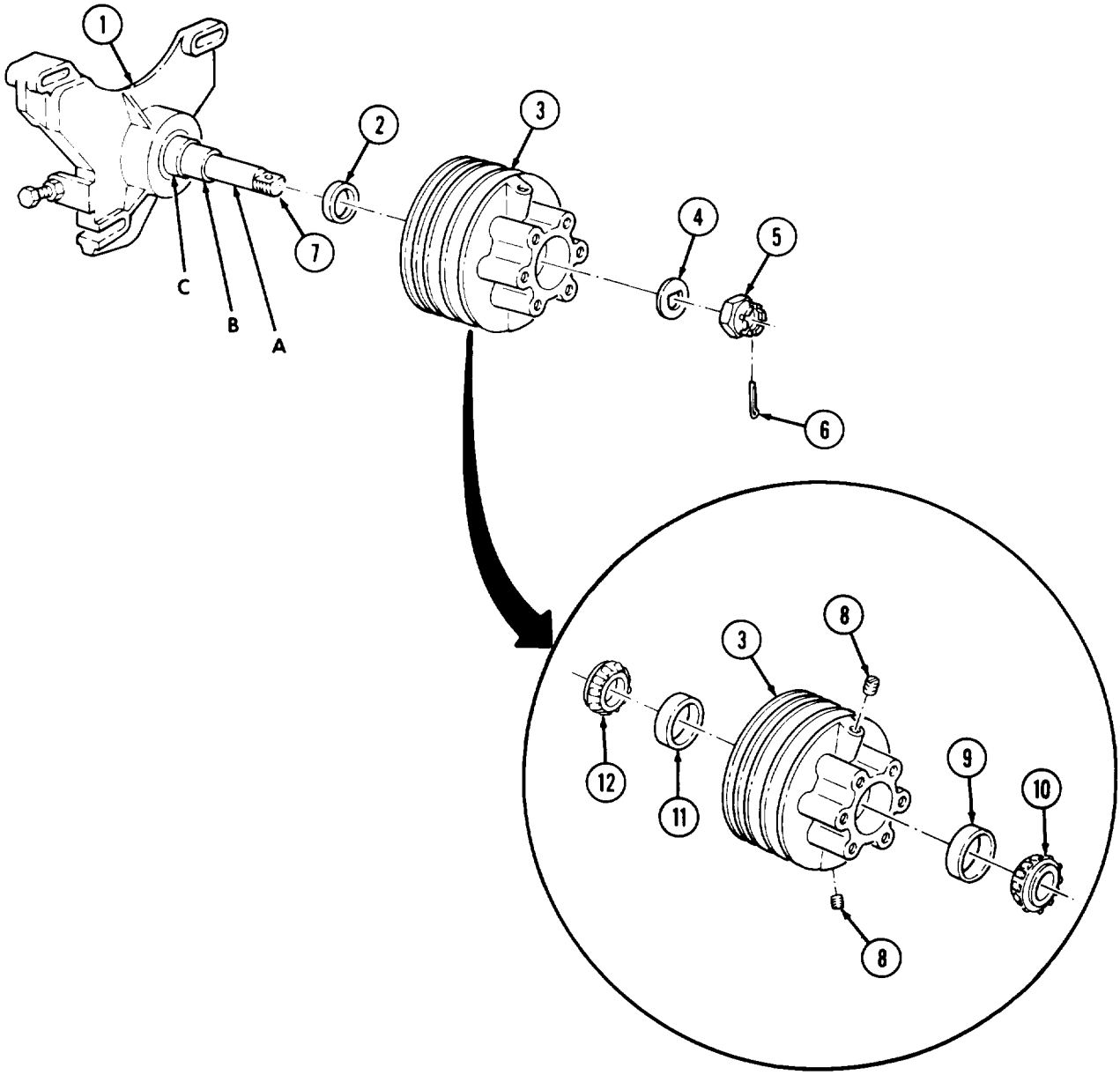

3-7. FAN HUB REPAIR (Contd)

c. Assembly

NOTE

Pack inner and outer bearings with GAA grease before installation.

1. Using arbor press, install inner bearing (12), outer bearing (9), and races (11) and (10) into hub pulley (3).
2. Apply lubricating oil to lip of new seal (2) and install in hub pulley (3) until flush.
3. Apply anti seize tape to threads of two plugs (8) and install plugs (8) on hub pulley (3).
4. Fill cavity of hub pulley (3) with GAA grease.
5. Install hub pulley (3) on shaft (7) of fan bracket (1).
6. Install key washer (4) and nut (5) on fan bracket (1).

CAUTION

Ensure hub pulley rotates while tightening. Failure to do so may cause damage to equipment.

7. Rotate hub pulley (3) and tighten nut (5) until a slight drag is felt, then back off 1/4 turn.
8. Install new cotter pin (6) in nut (5) and fan bracket (1).

3-7. FAN HUB REPAIR (Contd)

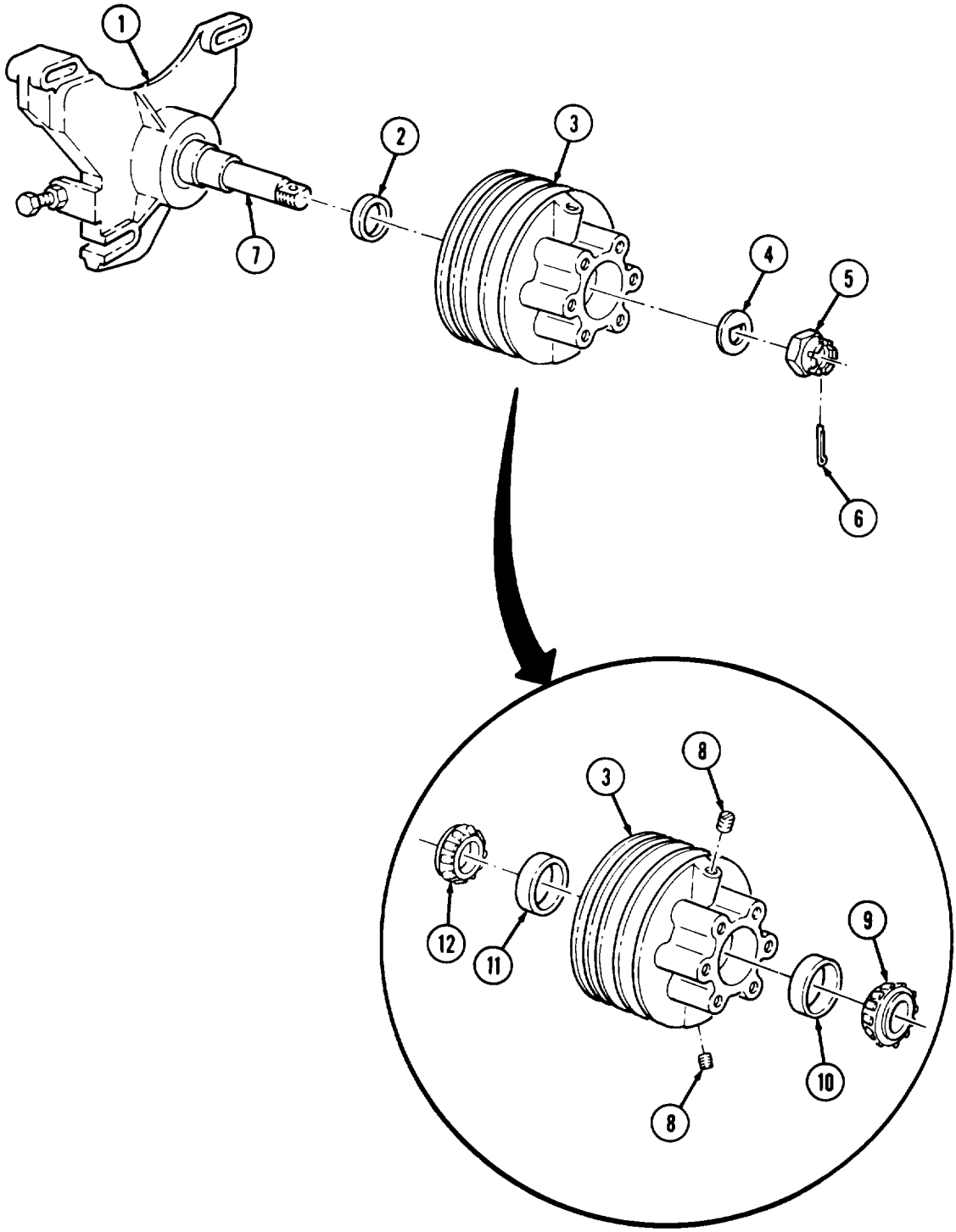

FOLLOW-ON TASK: Install fan bracket (TM 9-2320-260-20).

3-8. ACCESSORY DRIVE PULLEY REPLACEMENT

THIS TASK COVERS:

a. Removal **b. Installation**

INITIAL SETUP

APPLICABLE MODELS
All

SPECIAL TOOLS
Engine barring tool (Appendix B, Item 66)

TOOLS
General mechanic's tool kit (Appendix B, Item 1)
Mechanical puller kit (Appendix B, Item 14)
Torque wrench, 3/4-in. dr. (Appendix B, Item 2)
Breaker bar, 3/4-in. dr. (Appendix B, Item 139)
1-1/4-in. socket, 3/4-in. dr. (Appendix B, Item 140)

MATERIALS/PARTS
Locknut (Appendix D, Item 188)
Gasket (Appendix D, Item 152)
Pin (Appendix D, Item 316)
GAA grease (Appendix C, Item 14)

REFERENCES (TM)
TM 9-2320-260-20
TM 9-2320-260-34P-1

EQUIPMENT CONDITION
- Radiator removed (TM 9-2320-260-20).
- Fan blade removed (TM 9-2320-260-20).
- Water pump drivebelt removed (TM 9-2320-260-20).

NOTE

Use engine barring tool to prevent engine crankshaft from turning.

a. Removal

1. Remove locknut (5) and washer (4) from accessory drive pulley (3) and accessory driveshaft (6). Discard locknut (5).
2. Using puller, remove accessory drive pulley (3) from accessory driveshaft (6).
3. Remove pin (1) and gasket (2) from accessory driveshaft (6). Discard pin (1) and gasket (2).

b. Installation

1. Apply thin coat of GAA grease to accessory driveshaft (6).
2. Install new gasket (2) on accessory driveshaft (6).
3. Install new pin (1) on accessory driveshaft (6).
4. Aline keyway on accessory drive pulley (3) with pin (1) and install on accessory driveshaft (6).
5. Install washer (4) and new locknut (5) on accessory drive pulley (3) and accessory driveshaft (6). Tighten locknut (5) 270-340 lb-ft (366-461 N•m).

3-8. ACCESSORY DRIVE PULLEY REPLACEMENT (Contd)

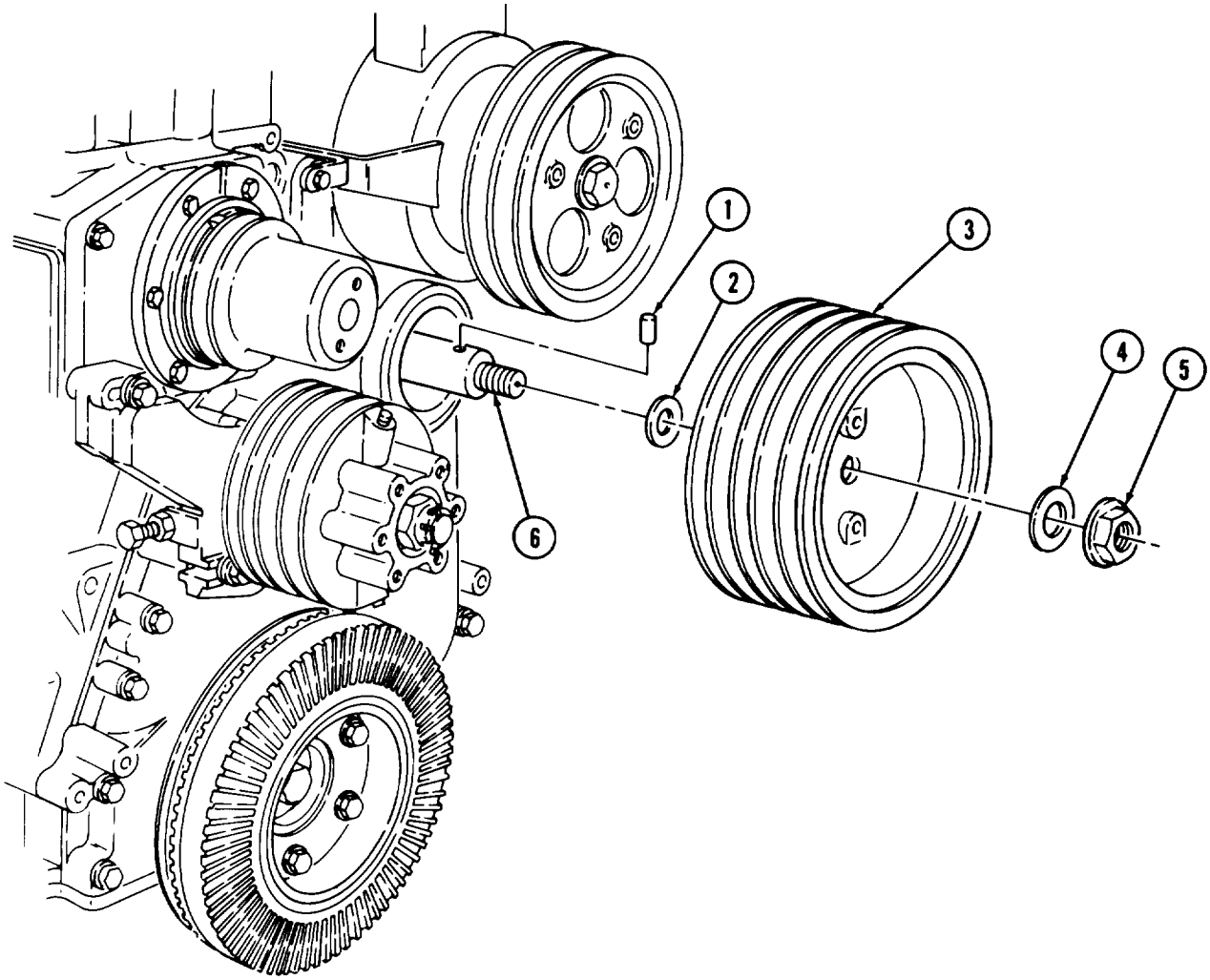

FOLLOW-ON TASKS:
- Water pump drivebelt installed (TM 9-2320-260-20).
- Fan blade installed (TM 9-2320-260-20).
- Radiator installed (TM 9-2320-260-20).

3-9. ACCESSORY DRIVE MAINTENANCE

THIS TASK COVERS:

a. Removal
b. Disassembly
c. Cleaning and Inspection
d. Assembly
e. Installation

INITIAL SETUP

APPLICABLE MODELS
All

TOOLS
General mechanic's tool kit (Appendix B, Item 1)
Dial indicator (Appendix B, Item 11)
Torque wrench, 3/8-in. dr. (Appendix B, Item 4)
Outside micrometer (Appendix B, Item 8)
Inside micrometer (Appendix B, Item 9)
Arbor press (Appendix B, Item 7)

MATERIALS/PARTS
Five screw-assembled lockwashers (Appendix D, Item 399)
Gasket (Appendix D, Item 109)
Lubricating oil (Appendix C, Item 21)
Drycleaning solvent (Appendix C, Item 48)

REFERENCES (TM)
TM 9-2320-260-10
TM 9-2320-260-34P-1

EQUIPMENT CONDITION
- Parking brake set (TM 9-2320-260-10).
- Accessory pulley removed (para. 3-8).
- Air compressor removed (para. 11-3).

a. Removal

Remove five screw-assembled lockwashers (4), accessory drive (3), and gasket (2) from engine block gearcase (1). Discard screw-assembled lockwashers (4) and gasket (2).

b. Disassembly

NOTE

Accessory driveshaft is mounted with locknut in later model.

1. Using dial indicator, measure end play of accessory driveshaft (6). Record measurement.
2. Remove screw (10) and washer (11) from accessory driveshaft (6).
3. Press accessory driveshaft (6) from coupling (12).
4. Remove accessory driveshaft (6) with drive gear (5), washer (8), and two thrust washers (14) and (13) from housing (9).
5. Using arbor press, remove drive gear (5) from accessory driveshaft (6).

NOTE

Do not remove dowel pin unless damaged.

6. Remove two dowel pins (7) from accessory driveshaft (6). Discard dowel pin (7).

3-9. ACCESSORY DRIVE MAINTENANCE (Contd)

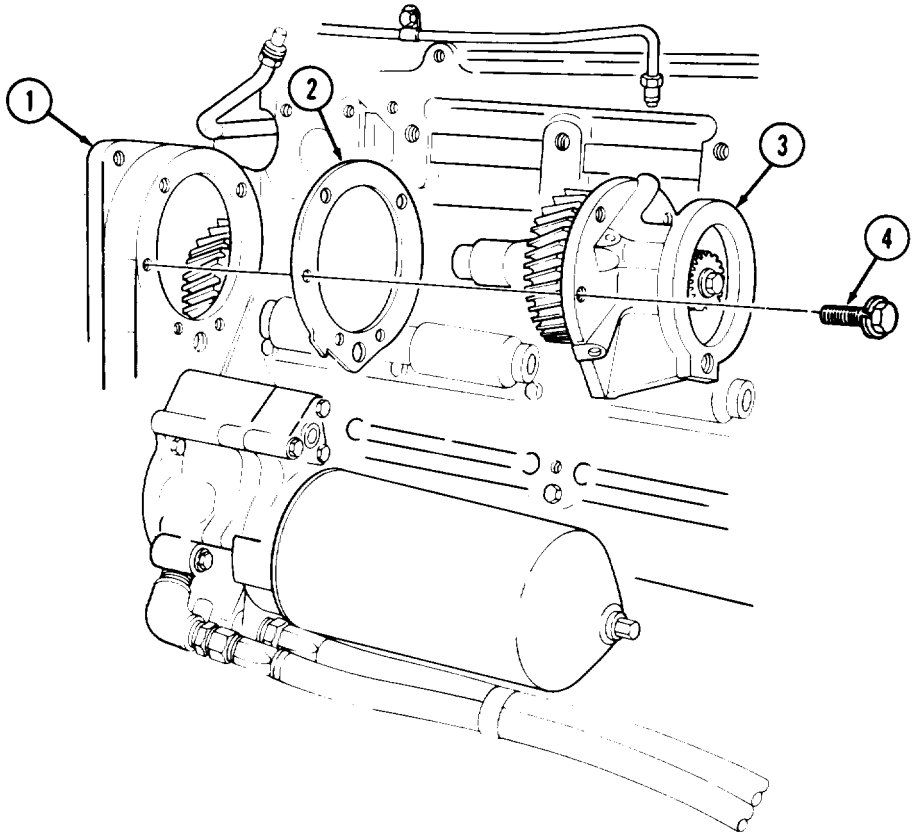

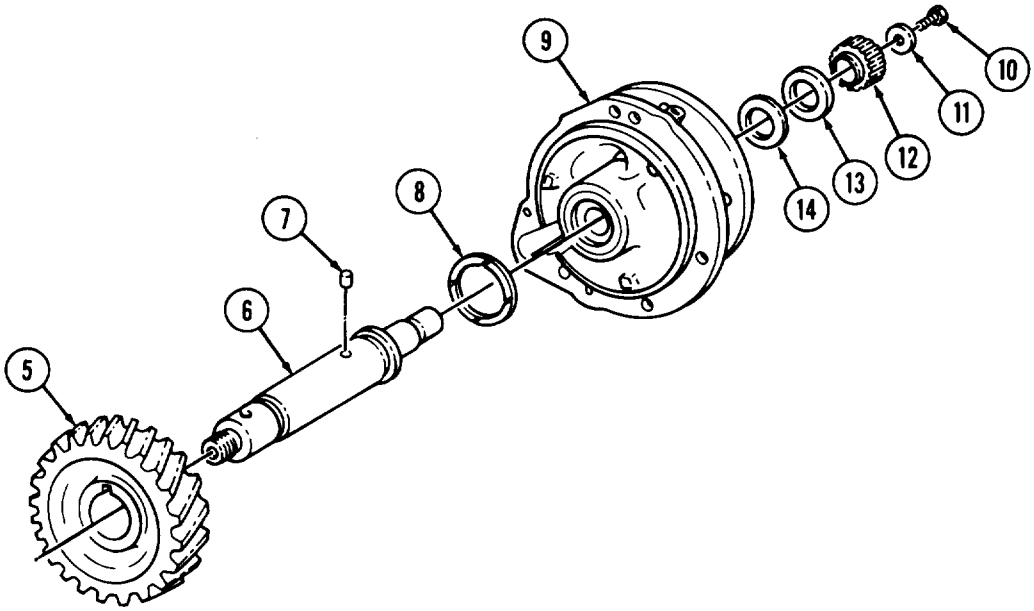

3-9. ACCESSORY DRIVE MAINTENANCE (Contd)

c. Cleaning and Inspection

1. For general cleaning instructions, refer to para. 2-8.
2. For general inspection instructions, refer to para. 2-9.
3. Inspect bushing (6) for pitting, galling, and cracks. Measure inside diameter of bushing (6). Replace bushing (6) if pitted, galled, cracked, or inside diameter is greater than 1.321 in. (33.6 mm).

NOTE

Perform steps 4 and 5 if bushing requires replacement.

4. Using arbor press, remove bushing (6) from housing (5). Discard bushing (6).
5. Using arbor press, install new bushing (6) in housing (5).
6. Inspect accessory driveshaft (2) for cracks, breaks, galling, stripped threads, and elongated pin holes. Replace or repair if threads are stripped. Replace accessory driveshaft (2) if cracked, broken, galled, or pin holes are elongated.
7. Measure outside diameter of accessory driveshaft (2) at bushing (6) location. Replace accessory driveshaft (2) if outside diameter is less than 1.310 in. (33.27 mm).
8. Inspect dowel pin (3) for cracks, bending, and obvious excessive wear. Replace dowel pin (3) if cracked, bent, or worn.
9. Inspect drive gear (1) and coupling (9) for cracks, breaks, and chips. Replace drive gear (1) or coupling (9) if cracked, broken, or chipped.
10. Inspect thrust washers (7) and (8) for cracks and scoring. Replace thrust washers (7) or (8) if cracked, scored, or accessory driveshaft (2) end play recorded earlier (task b, step 1) is greater than 0.012 in. (0.30 mm).

d. Assembly

1. Apply thin coating of lubricating oil to accessory drive shaft (2).
2. Install new dowel pin (3) in accessory driveshaft (2).
3. Using arbor press, install accessory driveshaft (2) in drive gear (1).

CAUTION

Thrust washers must be installed with grooved side facing away from housing. Failure to do so will result in damage to accessory drive unit.

4. Apply thin coating of lubricating oil to thrust washers (7) and (8).
5. Install thrust washer (7), accessory driveshaft (2) with drive gear (1), thrust washer (8), and washer (4) on housing (5). Ensure grooved sides of thrust washers (7) and (8) face away from housing (5).

3-9. ACCESSORY DRIVE MAINTENANCE (Contd)

NOTE

Replace screw and lockwasher with locknut on driveshaft in later model.

6. Using arbor press, install coupling (9) on accessory driveshaft (2).
7. Install washer (10) and screw (11) on accessory driveshaft (2). Tighten screw (11) 30-35 lb-ft (41-47 NŽm).

e. Installation

1. Position new gasket (17) and accessory drive (18) on engine block gearcase (16).
2. Remove plug (14) from front gearcase cover (12).
3. Rotate number one cylinder to top dead center (TDC), then 90° past TDC.

NOTE

If accessory drive gear and camshaft gear are not properly alined, compressor timing will be incorrect.

4. Aline timing marks on camshaft gear (15) with mark on drive gear (13).
5. Install accessory drive (18) on engine block gearcase (16) with five new screw-assembled lockwashers (19). Tighten screw-assembled lockwashers (19) 40-45 lb-ft (54-61 N•m).
6. Install plug (14) on front gearcase cover (12).

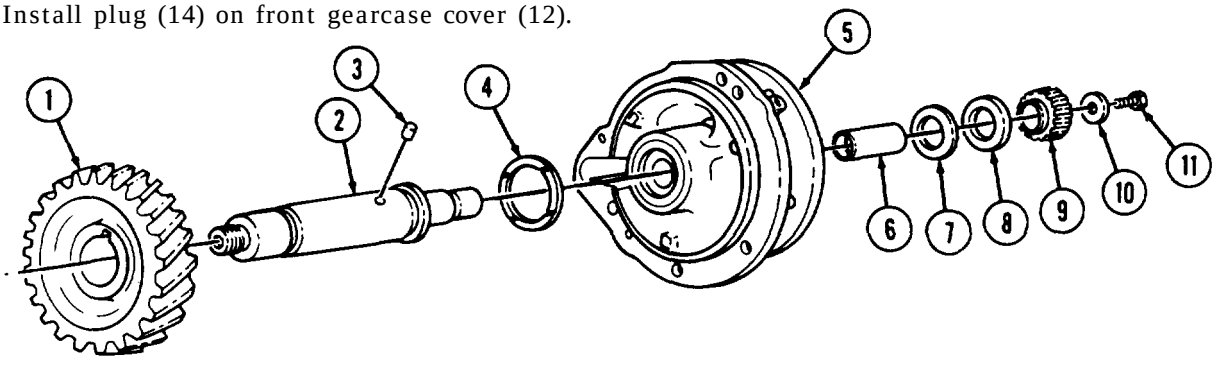

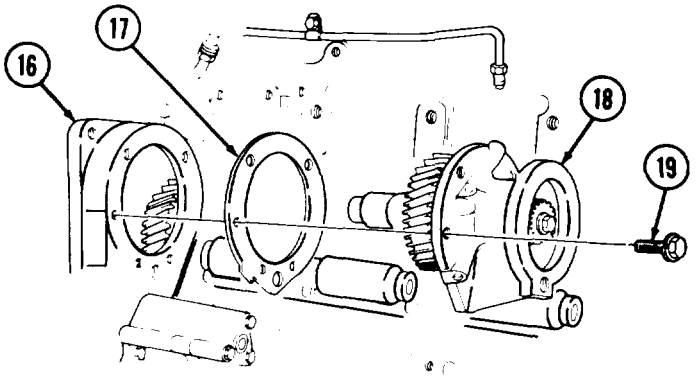

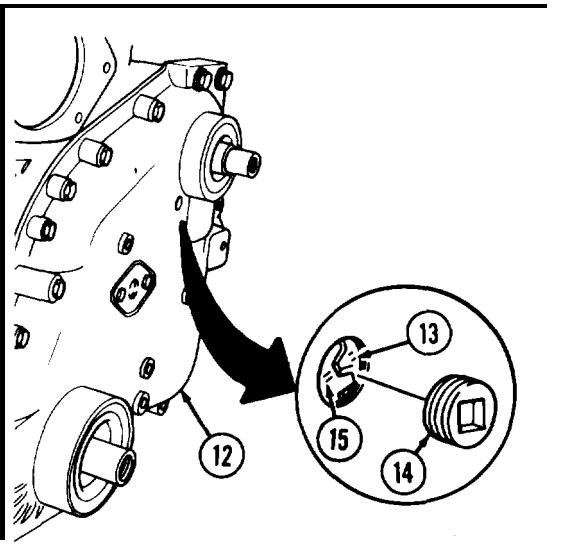

FOLLOW-ON TASKS: • Install accessory pulley (para. 3-8).
• Install air compressor (para. 11-3).

3-10. INTAKE MANIFOLD MAINTENANCE

THIS TASK COVERS:

a. Removal
b. Disassembly
c. Cleaning and Inspection
d. Assembly
e. Installation

INITIAL SETUP

APPLICABLE MODELS
All

TOOLS
General mechanic's tool kit (Appendix B, Item 1)
Torque wrench, 3/8-in. dr. (Appendix B, Item 4)

MATERIALS/PARTS
Fifteen lockwashers (Appendix D, Item 258)
Three gaskets (Appendix D, Item 105)
Gasket (Appendix D, Item 153)

MATERIALS/PARTS (Contd)
Antiseize tape (Appendix C, Item 50)
Cap and plug set (Appendix C, Item 6)

REFERENCES (TM)
TM 9-2320-260-20
TM 9-2320-260-34P-1

EQUIPMENT CONDITION
- Preheater nozzle and glow plug removed (TM 9-2320-260-20).
- Air cleaner hose removed (TM 9-2320-260-20).

a. Removal

CAUTION

Cap or plug all openings immediately after disconnecting lines and hoses to prevent contamination. Failure to do so may result in damage to equipment.

NOTE

- Perform steps 1 and 2 for late model engines.
- Engine intake manifold is mounted with screw-assembled lockwashers on late model engine.

1. Remove screw (28), lockwasher (27), washer (26), clamp (25), and tachometer driveshaft (24) from air intake manifold (1). Discard lockwasher (27).
2. Remove screw (31), lockwasher (30), washer (29), clamp (32), and air compressor outlet line (33) from air intake manifold (1). Discard lockwasher (30).
3. Remove two screws (21), lockwashers (22), washers (23), clamps (19), and fuel supply lines (20) from air intake manifold (1). Discard lockwashers (22).
4. Remove screw (21), lockwasher (22), washer (23), clamp (17), and harness (18) from air intake manifold (1). Discard lockwasher (22).
5. Remove two clamps (3) and hose (5) from elbow (6) and draft tube (4).
6. Remove elbow (6) from air intake connector (7).
7. Remove tube (12) and elbow (11) from air intake connector (7).
8. Remove two clamps (15) and hose (14) from air intake manifold (1) and air compressor inlet line (16).
9. Remove six screws (10), lockwashers (9), washers (8), air intake manifold (1), and three gaskets (2) from engine (13). Discard lockwashers (9) and gaskets (2).

3-10. INTAKE MANIFOLD MAINTENANCE (Contd)

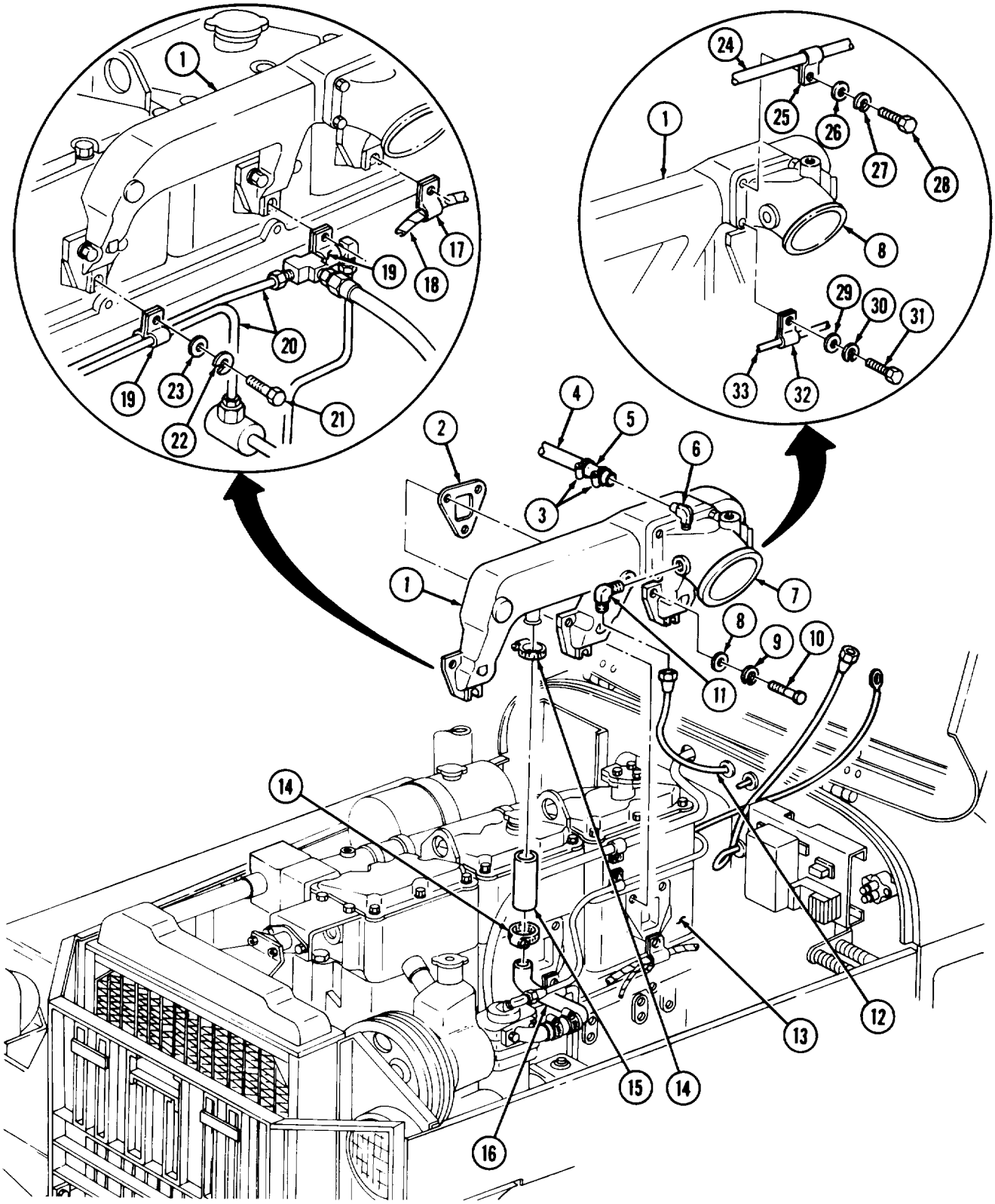

3-10. INTAKE MANIFOLD MAINTENANCE (Contd)

b. Disassembly

1. Remove plug (2) from intake manifold (1).
2. Remove four screws (7), lockwashers (6), washers (5), air intake connector (4), and gasket (3) from intake manifold (1). Discard lockwashers (6) and gasket (3).

1. For general cleaning instructions, refer to para. 2-8.
2. For general inspection instructions, refer to para. 2-9.

d. Assembly

1. Install new gasket (3) and air intake connector (4) on intake manifold (1) with four washers (5), new lockwashers (6), and screws (7). Tighten screws (7) 25-30 Ib-ft (34-41 N•m).
2. Apply antiseize tape to threads of plug (2) and install plug (2) on intake manifold (1).

e. Installation

1. Install three new gaskets (9) and air intake manifold (1) on engine (19) with six washers (15), new lockwashers (16), and screws (17). Tighten screws (17) 25-30 lb-ft (34-41 N•m).

NOTE

Male pipe threads must be wrapped with antiseize tape before installation.

Perform steps 2 and 3 for late model engines.

2. Install elbow (14) and tube (18) on air intake connector (4).
3. Install elbow (13) on air intake connector (4).
4. Install hose (12) on elbow (13) and draft tube (11) with two clamps (10).
5. Install harness (23) and clamp (22) on air intake manifold (1) with washer (28), new lock-washer (27), and screw (26). Tighten screw (26) 25-30 lb-ft (34-41 NŽm).
6. Install two fuel supply lines (25) and clamps (24) on air intake manifold (1) with two washers (28), new lockwashers (27), and screws (26). Tighten screws (26) 25-30 lb-ft (34-41 N•m).
7. Install hose (20) on air intake manifold (1) and air compressor inlet line (21) with two clamps (8).
8. Install air compressor outlet line (37) and clamp (38) on air intake manifold (1) with washer (36), new lockwasher (35), and screw (34). Tighten screw (34) 25-30 Ib-ft (34-41 N•m).
9. Install tachometer driveshaft (29) and clamp (30) on air intake manifold (1) with washer (31), new lockwasher (32), and screw (33). Tighten screw (33) 25-30 lb-ft (34-41 N•m).

3-10. INTAKE MANIFOLD MAINTENANCE (Contd)

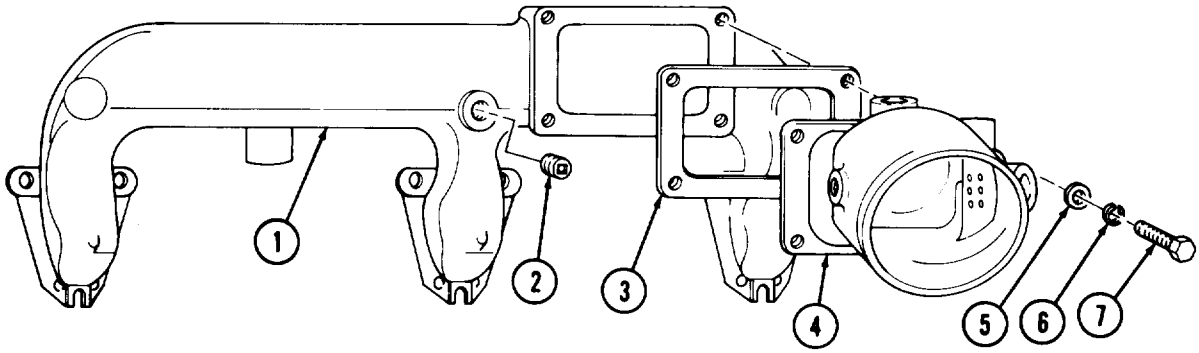

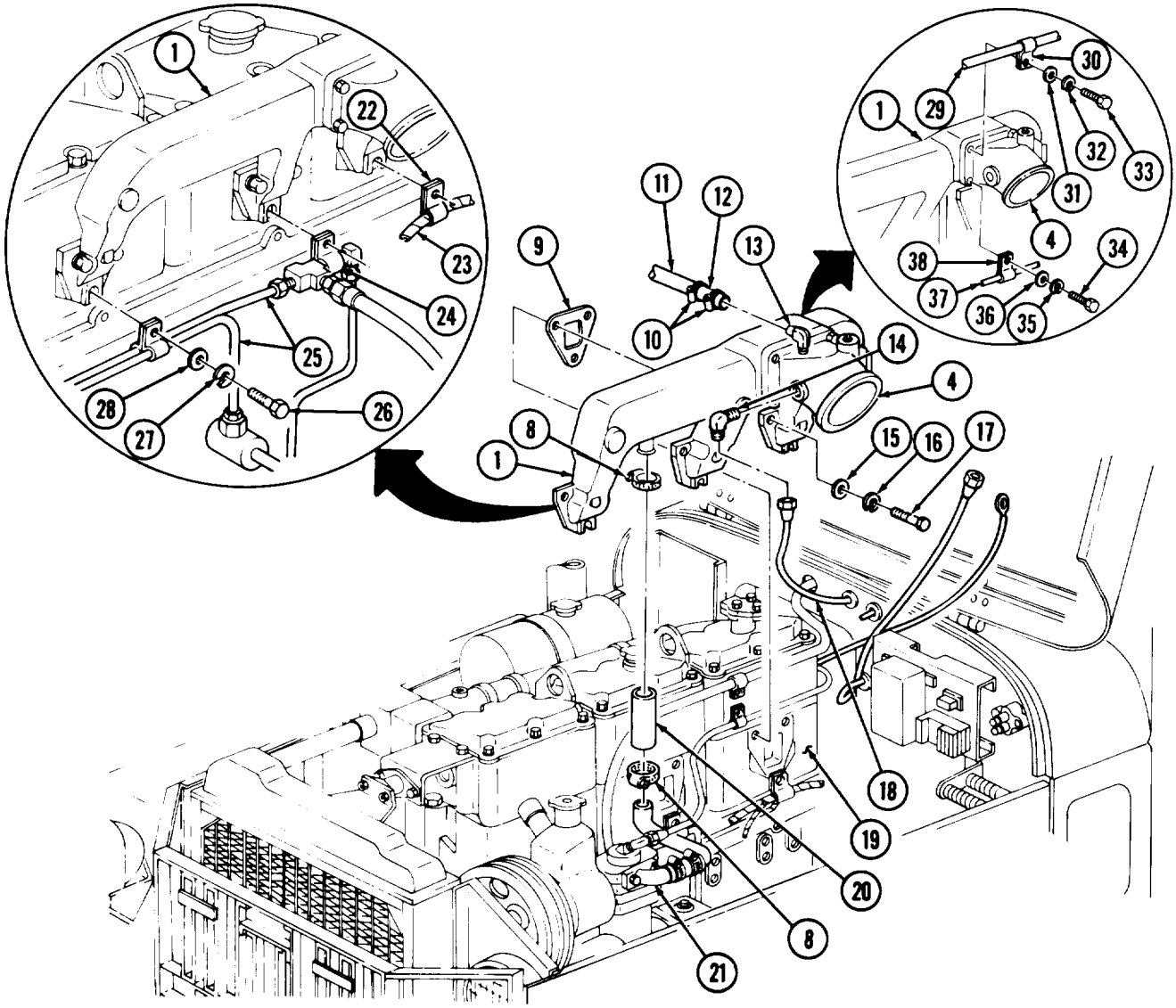

FOLLOW-ON TASKS: • Install preheater nozzle and glow plug (TM 9-2320-260-20).
• Install air cleaner hose (TM 9-2320-260-20).

3-11. EXHAUST MANIFOLD REPLACEMENT

THIS TASK COVERS:

a. Removal **b. Installation**

INITIAL SETUP

APPLICABLE MODELS
All

TOOLS
General mechanic's tool kit (Appendix B, Item 1)
Torque wrench, 1/2-in. dr. (Appendix B, Item 3)

MATERIALS/PARTS
Six gaskets (Appendix D, Item 113)
Gasket (Appendix D, Item 154)
Eleven locking plates (Appendix D, Item 164)

REFERENCES (TM)
TM 9-2320-260-10
TM 9-2320-260-20
TM 9-2320-260-34P-1

EQUIPMENT CONDITION
- Surge tank removed (TM 9-2320-260-20).
- Oil dipstick tube removed (TM 9-2320-260-20).

GENERAL SAFETY INSTRUCTIONS
Do not touch hot exhaust system components with bare hands.

WARNING

Do not touch hot exhaust system components with bare hands.
Injury to personnel may result.

a. Removal

1. Remove twelve screws (1), eleven locking plates (2), and six clamps (3) from exhaust manifold (5). Discard locking plates (2).
2. Remove four screws (11) and nuts (9) from exhaust manifold (5) and muffler exhaust flange (8).
3. Remove exhaust manifold (5) and six gaskets (4) from dowels (7) and engine (6). Discard gaskets (4).
4. Remove exhaust manifold (5) and exhaust flange gasket (10) from muffler exhaust flange (8). Discard exhaust flange gasket (10).
5. Remove left manifold (12) and right manifold (14) from center manifold (13).

b. Installation

1. Install left manifold (12) and right manifold (14) on center manifold (13).
2. Position new exhaust flange gasket (10) on muffler exhaust flange (8).
3. Position six new gaskets (4) on dowels (7) and engine (6).
4. Position exhaust manifold (5) on muffler exhaust flange (8) and on dowels (7) and engine (6).
5. Install six clamps (3), eleven locking plates (2), and twelve screws (1) on exhaust manifold (5). Tighten screws (1) to 20-25 ft-lb (27-34 N•m).
6. Install four screws (11) and nuts (9) on exhaust manifold (5) and muffler exhaust flange (8).

3-11. EXHAUST MANIFOLD REPLACEMENT (Contd)

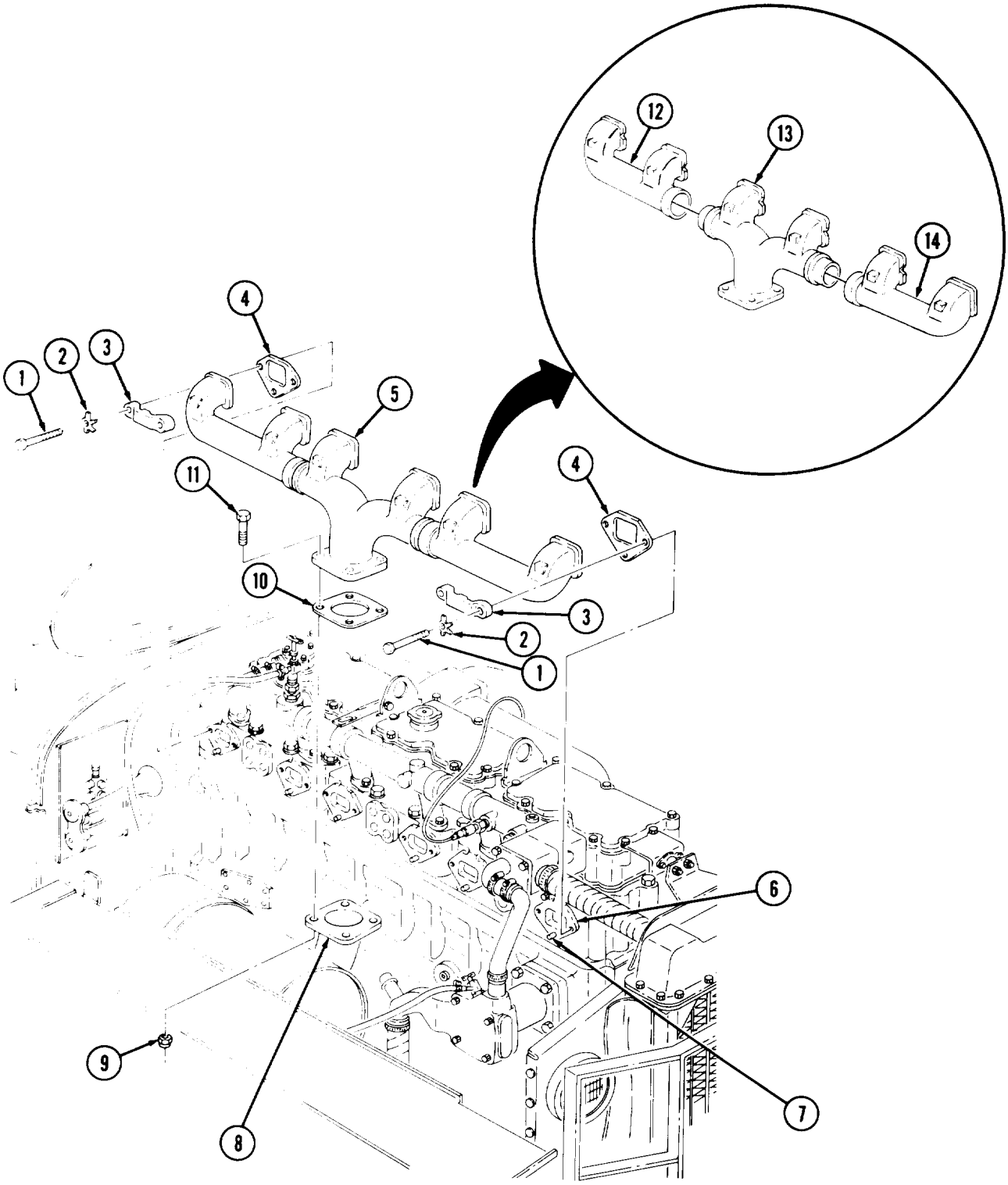

FOLLOW-ON TASKS:
- Install surge tank (TM 9-2320-260-20).
- Install oil dipstick tube (TM 9-2320-260-20).
- Start engine (TM 9-2320-260-10) and check for leaks.

3-12. OIL COOLER MAINTENANCE

THIS TASK COVERS:

a. Removal
b. Disassembly
c. Cleaning and Inspection
d. Assembly
e. Installation

INITIAL SETUP

APPLICABLE MODELS
All

TOOLS
General mechanic's tool kit (Appendix B, Item 1)
Engine oil cooler tester (Appendix B, Item 113)
Torque wrench, 3/8-in. dr. (Appendix B, Item 4)

MATERIALS/PARTS
Nine lockwashers (Appendix D, Item 215)
Two gaskets (Appendix D, Item 65)
Two retaining rings (Appendix D, Item 341)
Two O-rings (Appendix D, Item 298)
Rubber bushing (Appendix D, Item 368)
Drycleaning solvent (Appendix C, Item 41)
Antiseize tape (Appendix C, Item 43)
Lubricating oil (Appendix C, Item 21)
Sealing compound (Appendix C, Item 38)

EFERENCES (TM)
TM 9-2320-260-10
TM 9-2320-260-20
TM 9-2320-260-34P-1

EQUIPMENT CONDITION
Cooling system drained (TM 9-2320-260-20).

GENERAL SAFETY INSTRUCTIONS
Keep fire extinguisher nearby when using drycleaning solvent.
Compressed air source will not exceed 30 psi (207 kPa).
Eyeshields must be worn when cleaning with compressed air.

a. Removal

1. Remove four clamps (14), two hoses (15), and bypass tube (16) from thermostat housing (1) and oil cooler (13).
2. Remove clamp (10) and radiator outlet hose (9) from oil cooler (13).
3. Remove clamp (12) and hose (11) from oil cooler (13).
4. Remove air compressor coolant line (2) and rubber bushing (3) from elbow (8). Discard rubber bushing (3).
5. Remove five screws (7), lockwashers (6), oil cooler (13), and gasket (5) from cylinder block (4). Discard lockwashers (6) and gasket (5).

b. Disassembly

1. Remove four screws (19), lockwashers (20), end cover (17), and gasket (21) from housing (25). Discard lockwashers (20) and gasket (21).
2. Remove two retaining rings (22), O-rings (23), and element (27) from housing (25). Discard retaining rings (22) and O-rings (23).
3. Remove elbow (8) and two plugs (18) from end cover (17).
4. Remove valve (26) and plug (24) from housing (25).

3-12. OIL COOLER MAINTENANCE (Contd)

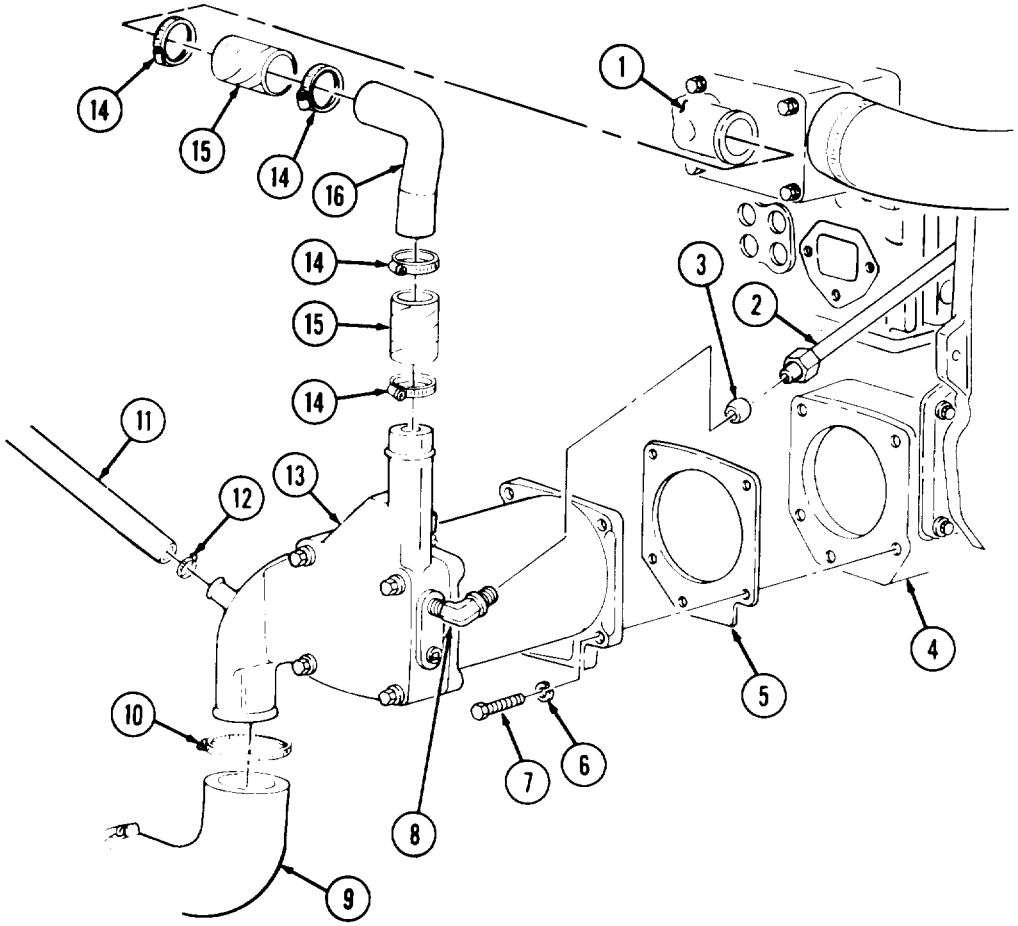

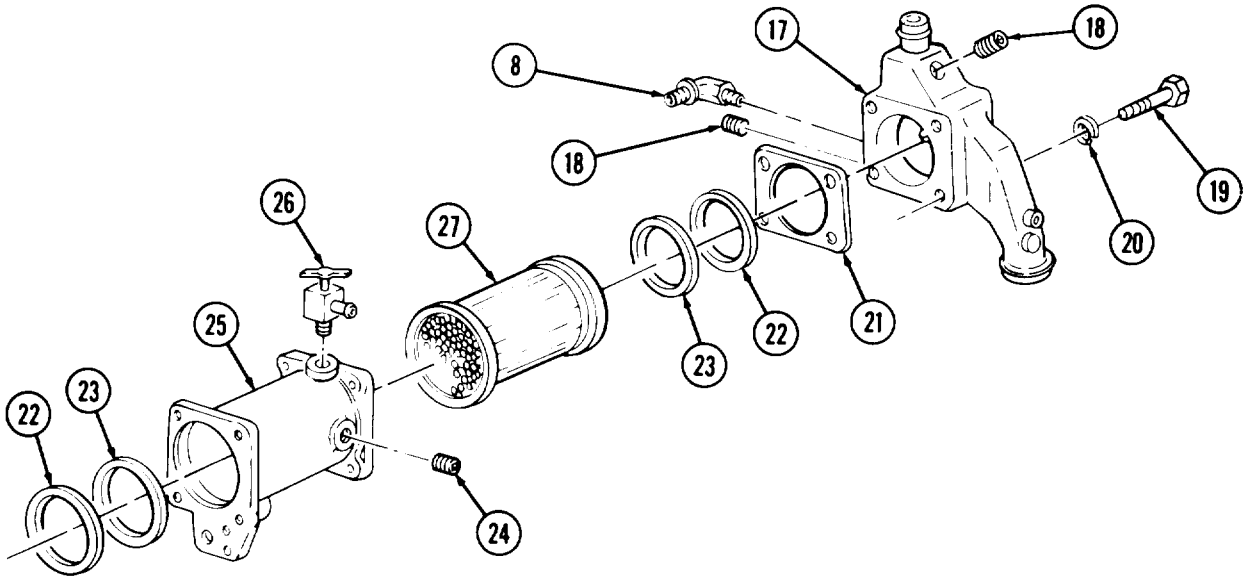

3-12. OIL COOLER MAINTENANCE (Contd)

c. Cleaning and Inspection

WARNING

- Drycleaning solvent is flammable and will not be used near open flame. Use only in well ventilated places. Failure to do so may result in injury to personnel.
- Compressed air source will not exceed 30 psi (207 kPa). When cleaning with compressed air, eyeshields must be worn. Failure to wear eyeshields may result in injury to personnel.

CAUTION

Clean cooler element and housing as soon as possible after removal. Failure to do so may cause damage to equipment.

1. Clean end cover (2) and housing (1) with drycleaning solvent.
2. Inspect end cover (2) for cracks and breaks. Replace cover (2) if cracked or broken.
3. Inspect housing (1) for cracks, breaks, and stripped threads. Replace housing (1) if cracked, broken, or threads are stripped.
4. Soak and flush cooler element (3) with drycleaning solvent.
5. Inspect element (3) for broken and cracked welds. Replace element (3) if welds are broken or cracked.

NOTE

For step 6 use oil cooler tester (3375253).

6. Check element (3) for leaks:
   a. Install end plates on ends of element.
   b. Move sliding plate along fixture bars until fixture will fit over element and end plates, then install two locking clips into fixture bars.
   c. Adjust fixture length by loosening two nuts and place element and end plates in to fixture. Ensure that air connection fitting on end plate extends through notch in fixture plate. Tighten nuts.
   d. Connect air supply line, equipped with a quick disconnect fitting, to air connection fitting.
   e. Controlling air pressure with air pressure regulator and three way discharge valve, apply 40 psi (276 kPa) of air pressure to element (3).
   f. Completely immerse element (3) and oil cooler tester assembly in water.
   g. Replace element (3) if bubbles are observed.

3-12. OIL COOLER MAINTENANCE (Contd)

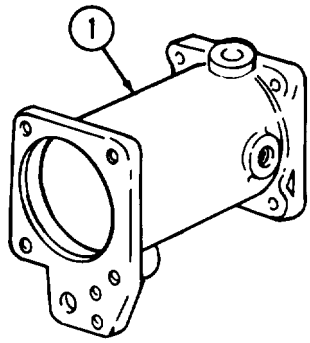

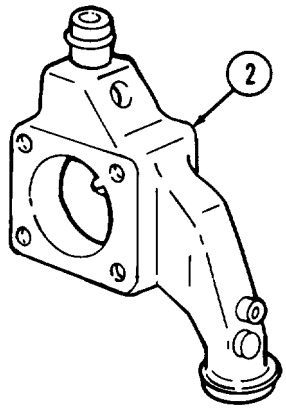

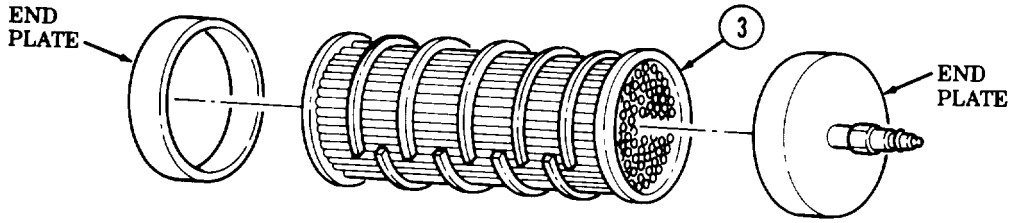

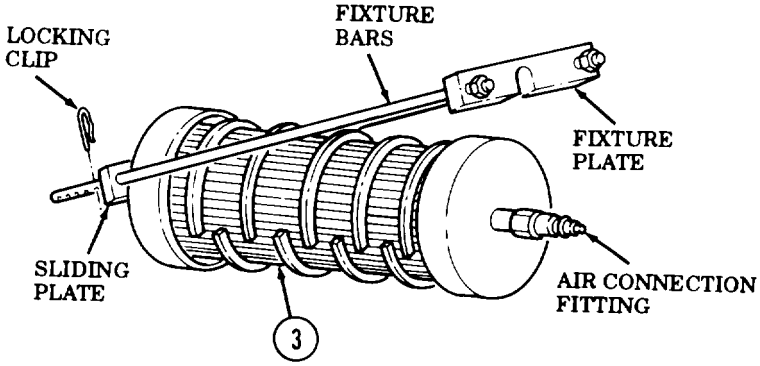

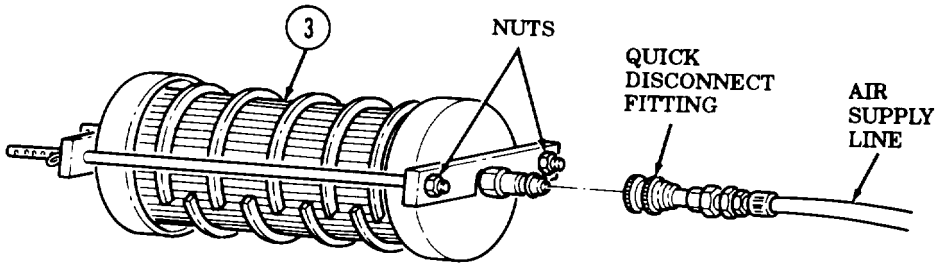

3-12. OIL COOLER MAINTENANCE (Contd)

1. Apply antiseize tape to threads of two plugs (2) and elbow (12) and install plugs (2) and elbow (12) on end cover (1).

NOTE

Apply sealing compound to threads of valve before installing.

2. Apply antiseize tape to threads of plug (7) and install plug (7) on housing (8).
3. Apply sealing compound to threads of valve (11) and install valve (11) on housing (8).
4. Install element (6) in housing (8). Ensure that manufacturer's index marks on element (6) and housing (8) aline.
5. Apply lubricant to two new O-rings (9) and install in housing (8).
6. Install two new retaining rings (10) on element (6) in housing (8).
7. Install new gasket (5) and end cover (1) on housing (8) with four new lockwashers (3) and screws (4). Tighten screws (4) 30-35 lb-ft (41-47 NŽm).

e. Installation

1. Install new gasket (17) and oil cooler (24) on engine block (16) with five new lockwashers (18) and screws (19).
2. Install new rubber bushing (15) and air compressor coolant line (14) on elbow (12).
3. Install hose (22) and clamp (23) on oil cooler (24).
4. Install radiator outlet hose (20) and clamp (21) on oil cooler (24).
5. Install bypass tube (27) and two hoses (26) on oil cooler (24) and thermostat housing (13) with four clamps (25).

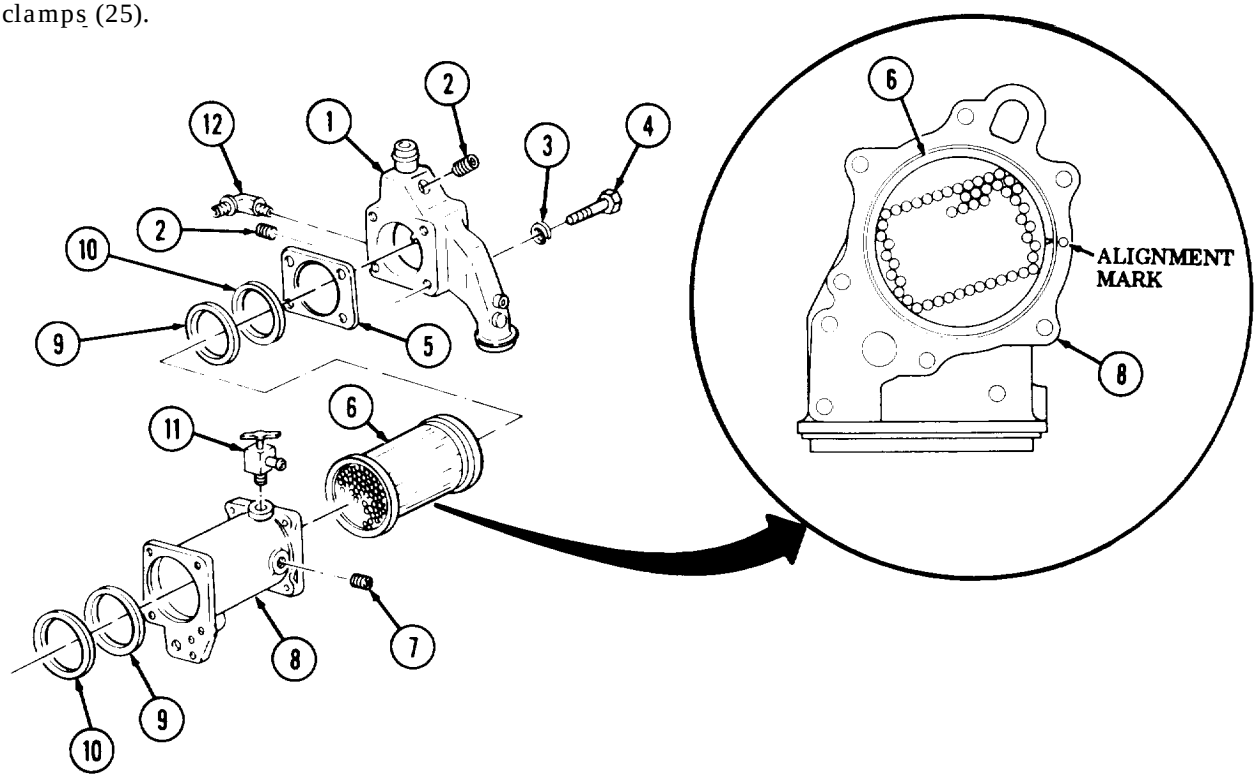

3-12. OIL COOLER MAINTENANCE (Contd)

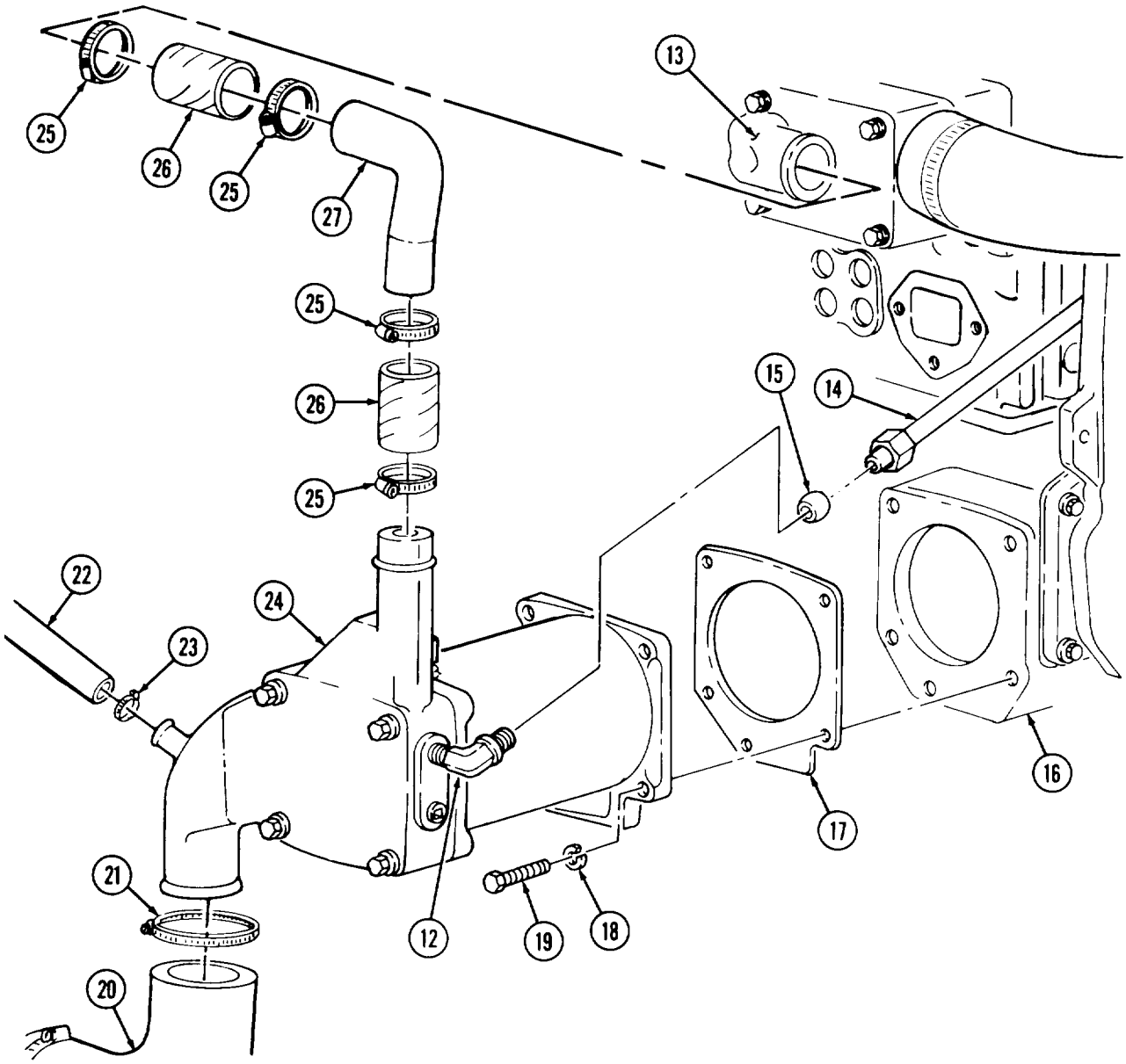

FOLLOW-ON TASKS:
- Fill coolant system to proper level (TM 9-2320-260-20).
- Start engine (TM 9-2320-260-10) and check coolant system for leaks and instrument gage for normal reading.

3-13. LIFTING BRACKETS REPLACEMENT

THIS TASK COVERS:

a. Removal **b. Installation**

INITIAL SETUP

APPLICABLE MODELS
All

TOOLS
General mechanic's tool kit (Appendix B, Item 1)
Torque wrench, 3/8-in. dr. (Appendix B, Item 4)

MATERIALS/PARTS
Locknut (Appendix D, Item 170)

REFERENCES (TM)
TM 9-2320-260-10
TM 9-2320-260-34P-1

EQUIPMENT CONDITION
- Parking brake set (TM 9-2320-260-10).
- Hood raised and secured (TM 9-2320-260-10).

a. Removal

1. Remove locknut (3), screw (1), and surge tank mounting strap (7) from rear lifting bracket (2). Discard locknut (3).
2. Remove four screws (4), washers (5), and two lifting brackets (2) from rocker lever housings (6).

b. Installation

1. Install two lifting brackets (2) on rocker lever housings (6) with four washers (5) and screws (4). Tighten screws (4) 55-65 lb-ft (75-88 N•m).
2. Install surge tank mounting strap (7) on lifting bracket (2) with screw (1) and new locknut (3).

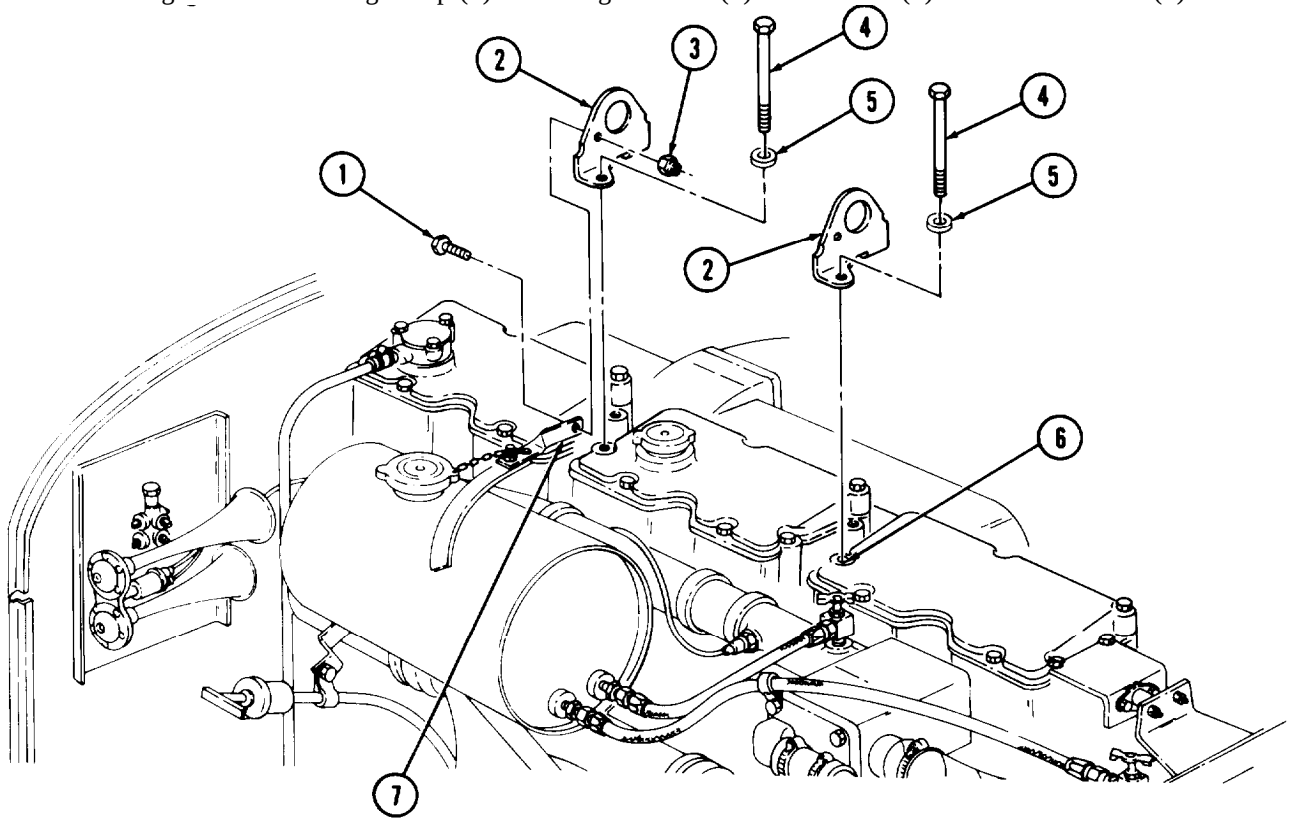

3-14. ROCKER LEVER HOUSING COVERS REPLACEMENT

THIS TASK COVERS:

a. Removal **b. Installation**

INITIAL SETUP

APPLICABLE MODELS
All

TOOLS
General mechanic's tool kit (Appendix B, Item 1)
Torque wrench, 3/8-in. dr. (Appendix B, Item 4)

MATERIALS/PARTS
Gasket (Appendix D. Item 103)
Five lockwashers (early models) (Appendix D, Item 225)

MATERIALS/PARTS (Contd)
Five screw-assembled lockwashers (late models) (Appendix D, Item 395)

REFERENCES (TM)
TM 9-2320-260-10
TM 9-2320-260-34P-1

EQUIPMENT CONDITIONS
Parking brake set (TM 9-2320-260-10).

NOTE

All rocker lever housing covers are replaced the same way. This procedure covers the rear rocker lever housing.

a. Removal

1. Loosen two clamps (2) and remove draft tube hose (1) from crankcase breather (3) and elbow (10).
2. Remove five screws (4), lockwashers (5), washers (6), rocker lever housing cover (7), and gasket (8) from rocker lever housing (9). Discard lockwashers (5) and gasket (8).

b. Installation

1. Install new gasket (8) and rocker lever housing cover (7) on rocker lever housing (9) with five washers (6), new lockwashers (5), and screws (4). Tighten screws (4) 10-15 lb-ft (14-20 N•m).
2. Install draft tube hose (1) on crankcase breather (3) and elbow (10). Tighten two clamps (2).

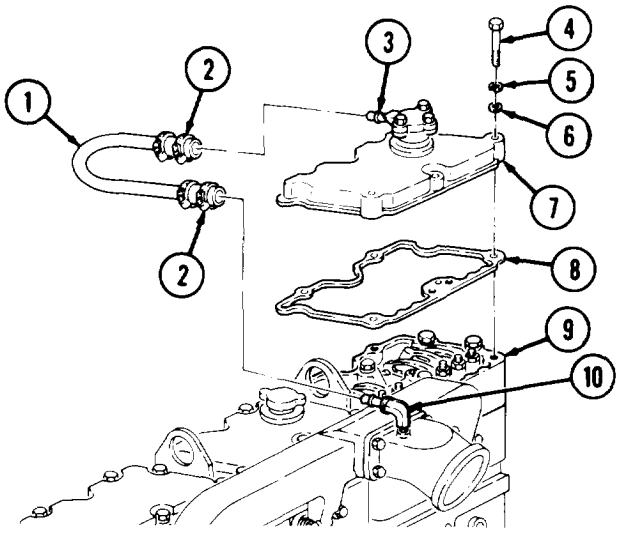

3-15. ROCKER LEVER HOUSING AND PUSH TUBES MAINTENANCE

THIS TASK COVERS:

a. Removal
b. Disassembly
c. Cleaning and Inspection
d. Repair
e. Assembly
f. Installation

INITIAL SETUP

APPLICABLE MODELS
All

TOOLS
General mechanic's tool kit (Appendix B, Item 1)
Torque wrench, 3/8-in. dr. (Appendix B, Item 4)
Arbor press (Appendix B, Item 7)
Telescoping gage set (Appendix B, Item 74)
Inside micrometer (Appendix B, Item 9)
Outside micrometer (Appendix B, Item 8)
Hex head socket, 3/8-in. dr. (Appendix B, Item 141)
Radius gage (Appendix E, Figure E-2)

MATERIALS/PARTS
Gasket (Appendix D, Item 91)
Two locknuts (Appendix D, Item 190)
Two performed packings (Appendix D, Item 311)
Lubricating oil (Appendix C, Item 21)
Blue pigment (Appendix C, Item 26)
Sealant (Appendix C, Item 44)

REFERENCES (TM)
TM 9-2320-260-10
TM 9-2320-260-34P-1

EQUIPMENT CONDITION
- Parking brake set (TM 9-2320-260-10).
- Rocker lever housing covers removed (para. 3-14).

a. Removal

NOTE

- All rocker lever housings and push tubes are replaced basically the same way. This procedure covers the front rocker lever housing and push tube.
- Perform step 1 for No. 1 rocker lever housing.

1. Remove two locknuts (2), screws (12), and washers (13) from trunnion bracket (1) and radiator mount (11). Discard locknuts (2).
2. Remove two screws (4), washers (3), and trunnion bracket (1) from rocker lever housing (8).
3. Loosen six adjusting nuts (16) and turn adjusting screws (15) two turns counterclockwise.

NOTE

Mark rocker lever housing and push tubes for installation.

4. Remove four screws (5), washers (6), lifting bracket (7), rocker lever housing (8), and gasket (9) from cylinder head (10). Discard gasket (9).
5. Remove six push tubes (14) from cylinder head (10).

3-15. ROCKER LEVER HOUSING AND PUSH TUBES MAINTENANCE (Contd)

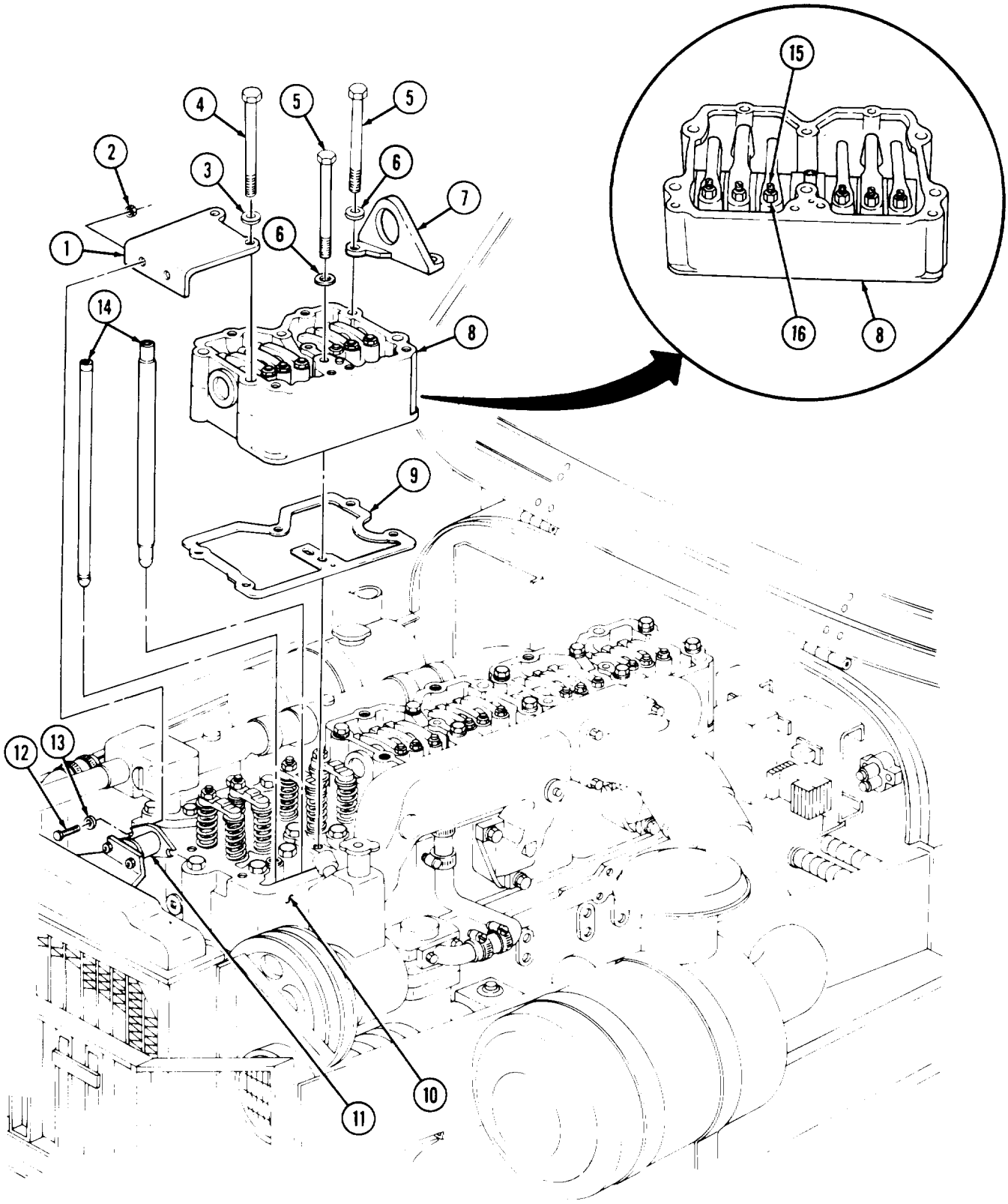

3-15. ROCKER LEVER HOUSING AND PUSH TUBES MAINTENANCE (Contd)

1. Remove setscrew (6) from rocker lever housing (9).

CAUTION

When removing rocker lever shaft, position brass drift and lightly tap on shaft. Striking the housing or levers will cause damage.

NOTE

- Mark locations of rocker levers for installation.
- Mark rocker lever shaft direction for installation.

2. Using brass drift, tap rocker lever shaft (8) from two exhaust (1), injector (2), and intake (3) rocker levers and rocker lever housing (9).
3. Remove two packings (7) from rocker lever shaft (8). Discard packings (7).
4. Remove two exhaust (1), injector (2), and intake (3) rocker levers from rocker lever housing (9).
5. Remove six adjusting screws (4) and adjusting nuts (5) from two exhaust (1), injector (2), and intake (3) rocker levers.

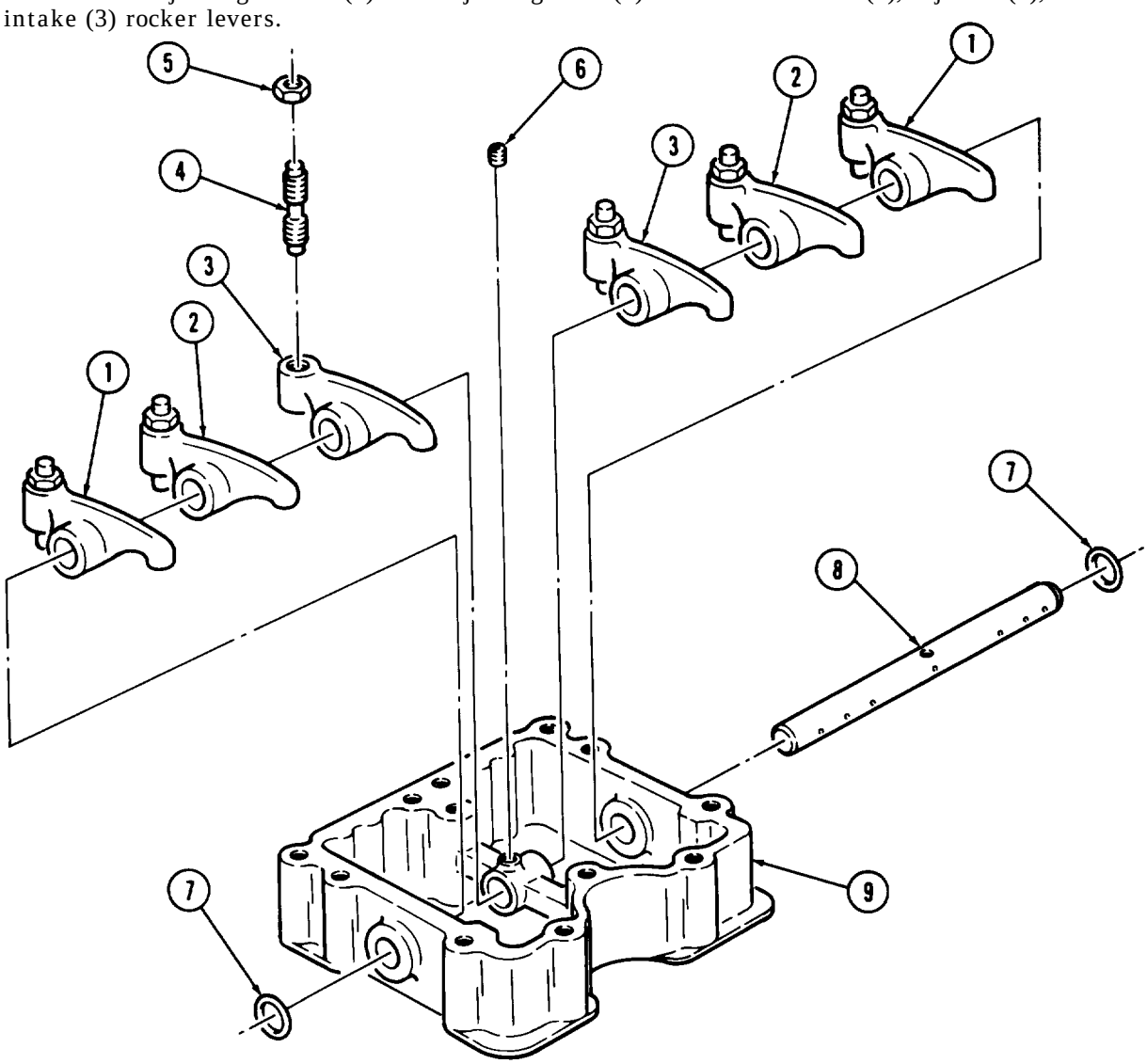

3-15. ROCKER LEVER HOUSING AND PUSH TUBES MAINTENANCE (Contd)

c. Cleaning and Inspection

1. For general cleaning instructions, refer to para. 2-8.
2. Inspect rocker lever bushings (10) for cracks and pitting. Replace rocker lever bushings (10) if cracked or pitted.
3. Measure inner diameter of rocker lever bushings (10). Replace rocker lever bushings (10) if inner diameter exceeds 1.1286 in. (28.666 mm).
4. Inspect exhaust (1), intake (3), and injector (2) rocker levers for cracks, breaks, and plugged oil passages. Replace rocker levers if cracked or broken. Clean oil passages if plugged.
5. Inspect injector lever socket seat (11) for wear as follows:
   a. Apply blue pigment to ball end of new injector link (12).
   b. Place ball end in socket seat (11) and rotate.
   c. Replace socket seats (11) if 80% of area is not pigmented.
6. Inspect exhaust (13), intake (14), and injector (15) push tubes for cracks and bends. Replace push tubes if cracked or bent.

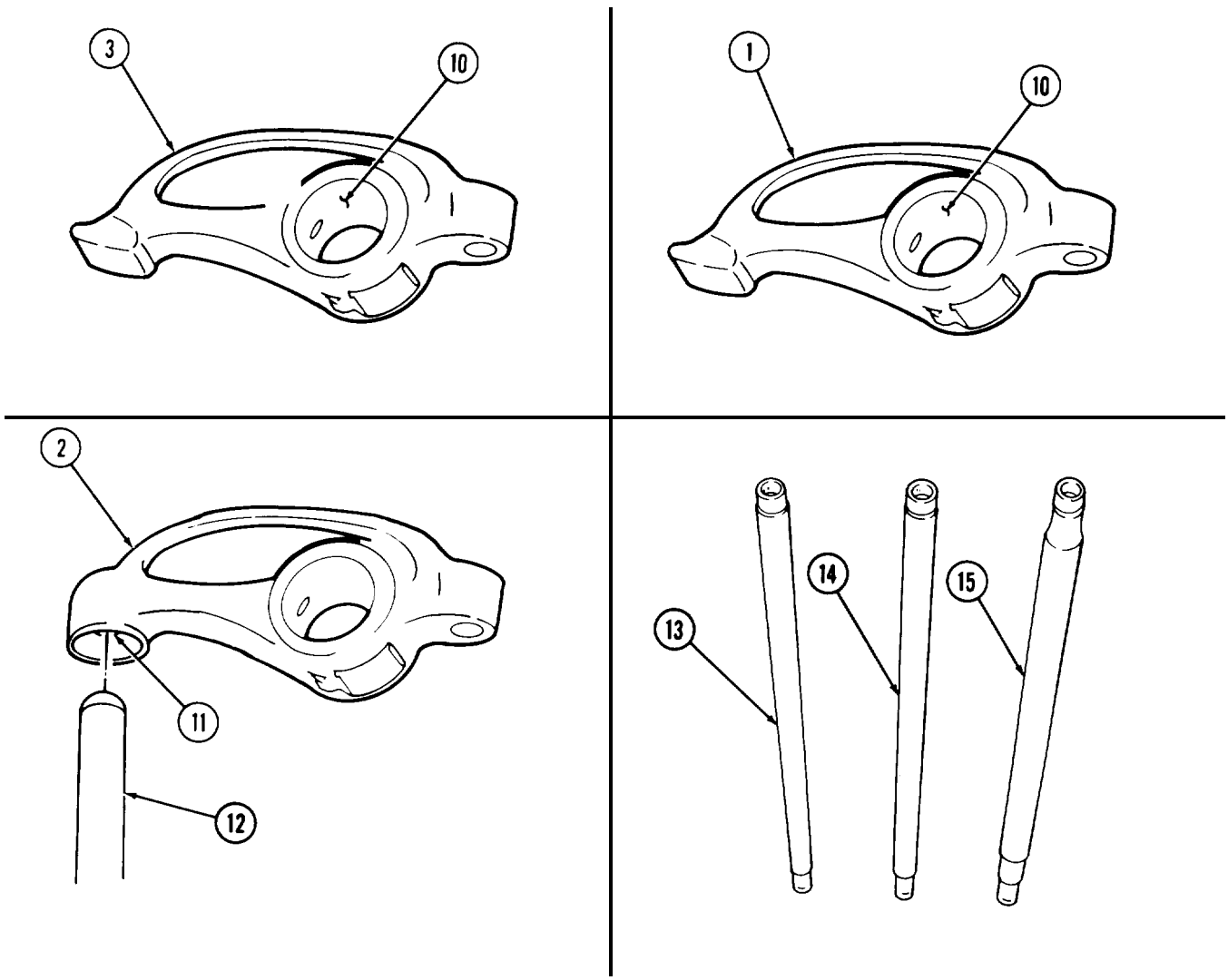

3-15. ROCKER LEVER HOUSING AND PUSH TUBES MAINTENANCE (Contd)

7. Inspect push tube socket seat (2) for wear as follows:
   a. Apply blue pigment to ball end of new adjusting screw (1).
   b. Place ball end in socket seat (2) and rotate.
   c. Replace push tubes (3) if 80% of area is not pigmented.
8. Inspect adjusting screw (1) for wear as follows:
   a. Using 0.25 in, (6.35 mm) radius gage, check ball end (4) of adjusting screw (1) for flat and out-of-round areas. Discard adjusting screw (1) if ball end (4) is flat or out-of-round.
   b. Thread new nut (5) full length of adjusting screw (1). Replace if adjusting nut (5) binds or strips threads.
9. Inspect rocker lever housing (7) for cracks, breaks, and damaged threads. Replace rocker lever housing (7) if cracked, broken, or threads are damaged.
10. Inspect shaft bore (6) for scratches and wear. Measure shaft bore (6) at several places. Replace rocker lever housing (7) if shaft bore (6) is scratched or diameter exceeds 1.125 in. (28.58 mm).
11. Inspect rocker lever shaft (9) for scratches. Measure outside diameter at several places for wear. Replace rocker lever shaft (9) if scratched or outside diameter is less than 1.122 in. (28.50 mm).
12. Remove two plugs (8) from rocker lever shaft (9). Check for clogged oil passages (10). Clean if oil passages (10) are clogged.
13. Install plugs (8) on rocker lever shaft (9). Tighten plugs (8) 50-70 lb-ft (68-95 N•m). Mark ends of plugs (8) to indicate setscrew hole (11) position.

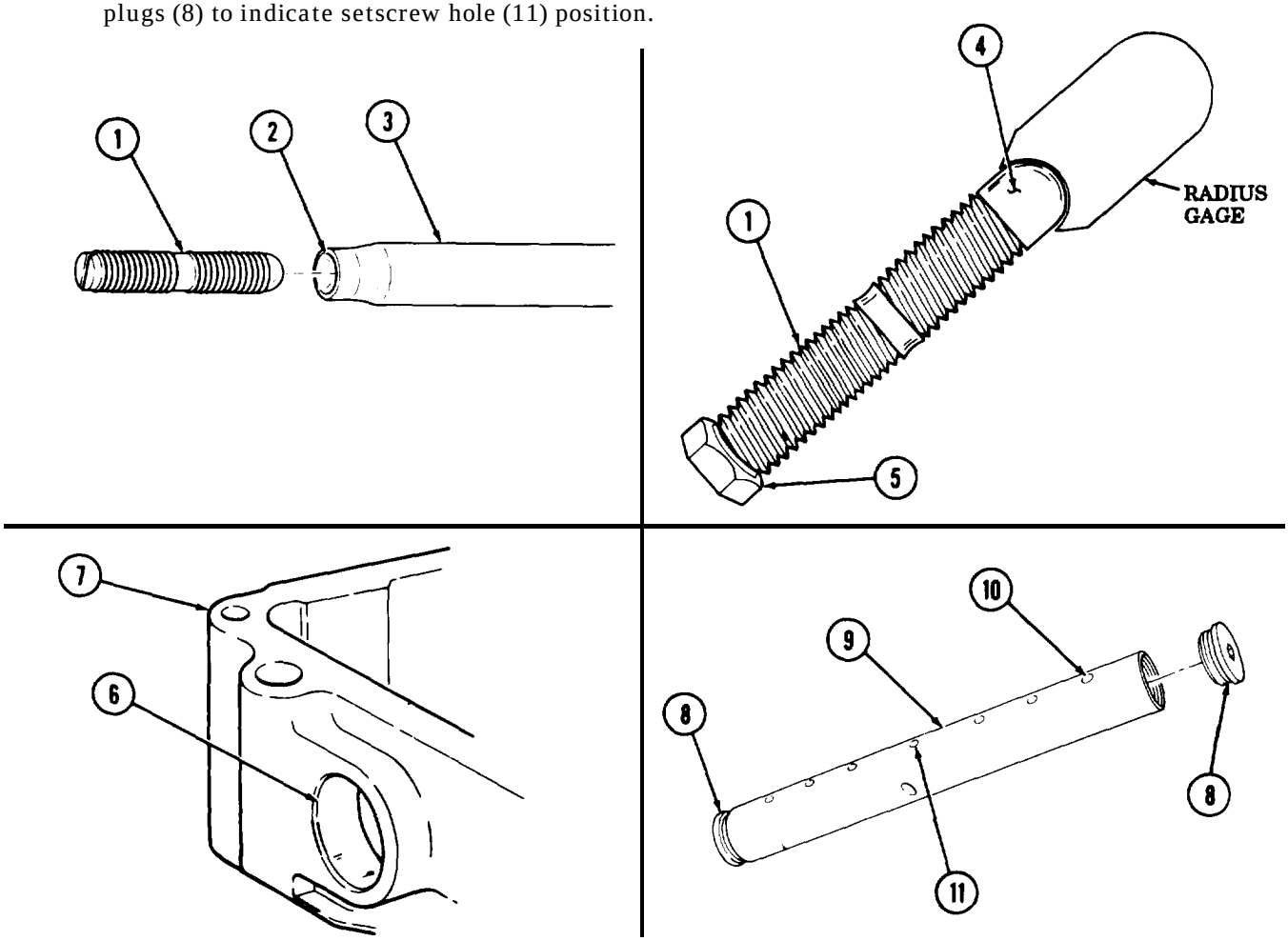

3-15. ROCKER LEVER HOUSING AND PUSH TUBES MAINTENANCE (Contd)

d. Repair

NOTE

Perform steps 1 through 5 if inspection requires replacement of defective parts.

1. Using arbor press, remove bushing (12) from rocker lever (13). Discard bushing (12).

CAUTION

Ensure new bushing oil holes are properly alined to oil passages in rocker levers. Failure to do so will cause lubrication failure and severe engine damage.

NOTE

- Ensure bushing is installed in injector and exhaust rocker levers so that oil holes to crosshead nose or injector link and adjusting screw are open.
- Ensure bushing is installed in intake rocker levers so that oil hole at crosshead nose is closed and slot is aligned with oil hole at adjusting screw end.

2. Using arbor press install bushing (12) from rocker lever (13).
3. Drill a small hole in injector lever (15) above socket seat (16).
4. Push socket seat (16) from injector lever (15). Discard socket seat (16).
5. Stake plug (14) in hole and install new socket seat (16) in injector lever (15).

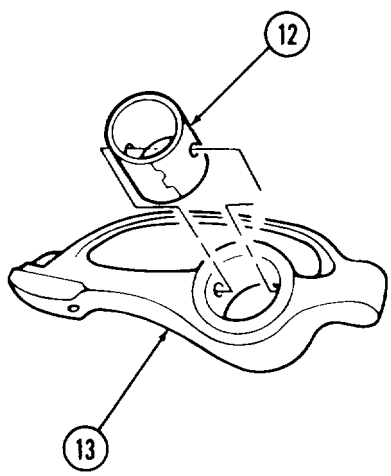

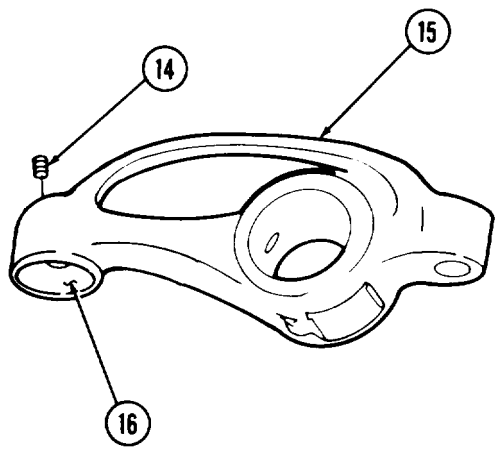

3-15. ROCKER LEVER HOUSING AND PUSH TUBES MAINTENANCE (Contd)

e. Assembly

NOTE

Apply lubricating oil to all parts before installation.

1. Install six adjusting screws (2) and nuts (1) on two exhaust (3), injector (4), and intake (5) rocker levers.

CAUTION

Ensure rocker lever shaft oil holes are properly alined with oil passages in rocker lever housing. Failure to do so may cause lubrication failure and engine damage.

2. Position two exhaust (3), injector (4), and intake (5) rocker levers in rocker lever housing (10).
3. Install rocker lever shaft (7) through rocker lever housing (10) and rocker levers (3), (4), and (5). Ensure mark on plugs (9) face upward.
4. Push rocker lever shaft (7) until it extends from rocker lever housing (10) and install new packing (11) on rocker lever shaft (7) from outside rocker lever housing (10).
5. Push rocker lever shaft (7) until it extends from opposite end of rocker lever housing (10) and install new packing (8) on rocker lever shaft (7) from outside rocker lever housing (10).
6. Aline hole in rocker lever shaft (7) with hole in rocker lever housing (10).
7. Apply sealant to threads of setscrew (6) and install in rocker lever housing (10).

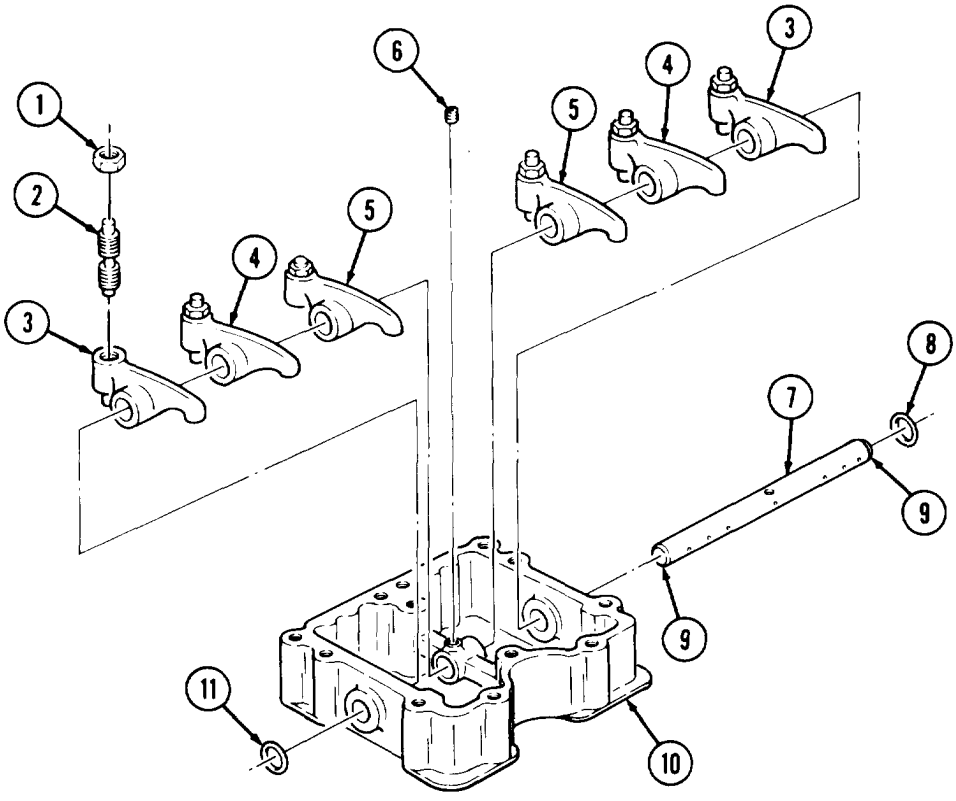

3-15. ROCKER LEVER HOUSING AND PUSH TUBES MAINTENANCE (Contd)

f. Installation

NOTE

- Do not mix push tubes during installation. The injector tube is the largest and is positioned between the intake and exhaust push tubes. Intake and exhaust push tubes are identical.
- Ensure push tubes remain seated in cam followers during rocker lever housing installation.

1. Install push tubes (24) in cylinder head (20).
2. Install new gasket (19), rocker lever housing (10), and lifting bracket (18) on cylinder head (20) with four washers (17) and screws (16). Finger tighten screws (16).
3. Install trunnion bracket (12) on rocker lever housing (10) with two washers (14) and screws (15). Finger tighten screws (15).
4. Tighten screws (15) and (16) 55-65 lb-ft (75-88 N•m) in sequence.
5. Install trunnion bracket (12) on radiator mount (23) with two washers (22), screws (21), and new locknuts (13).

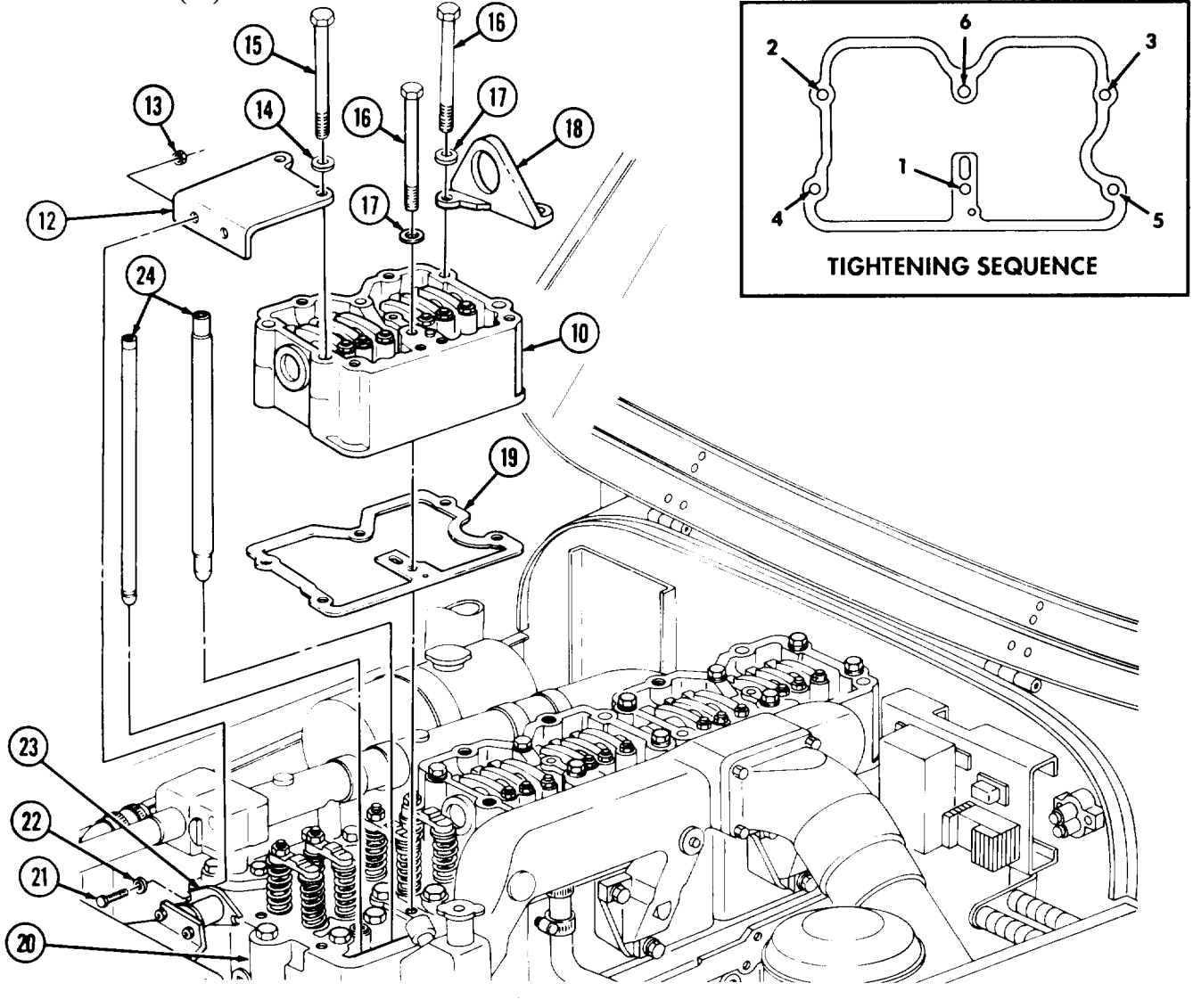

FOLLOW-ON TASK: Adjust rocker levers (paras. 3-82 and 3-83).

3-16. VALVE CROSSHEAD MAINTENANCE

THIS TASK COVERS:

a. Removal
b. Inspection
c. Installation and Adjustment

INITIAL SETUP

APPLICABLE MODELS
All

TOOLS
General mechanic's tool kit (Appendix B, Item 1)
Dial indicator (Appendix B, Item 11)
Inside micrometer (Appendix B, Item 9)
Outside micrometer (Appendix B, Item 8)
Torque wrench, 3/8-in. dr. (Appendix B, Item 4)

MATERIALS/PARTS
Lubricating oil (Appendix C, Item 21)

REFERENCES (TM)
TM 9-2320-260-10
TM 9-2320 -260-34P-1

EQUIPMENT CONDITION
- Parking brake set (TM 9-2320-260-10).
- Rocker lever housing and push tubes removed (para. 3-15).

NOTE

All valve crossheads are maintained the same way. This procedure covers one valve crosshead.

a. Removal

1. Loosen adjusting nut (3) and turn adjusting screw (2) one turn counterclockwise.
2. Remove crosshead (1) from cylinder head guide (5).

b. Inspection

1. Inspect crosshead (1) for cracks, breaks, and scoring. Replace crosshead (1) if cracked, broken, or scored.
2. Inspect adjusting screw (2) for damaged, distorted, and stripped threads. Replace adjusting screw (2) if threads are damaged, distorted, or stripped.
3. Inspect bore of crosshead (1) for wear. Replace crosshead (1) if bore exceeds 0.440 in. (11.18 mm) or out-of-round.
4. Inspect cylinder head guide (5) for cracks, breaks, and wear. Replace cylinder head wide (5) if cracked, broken, or if diameter is worn smaller than 0.432 in. (10.97 mm).

c. Installation and Adjustment

1. Coat crosshead (1) and cylinder head guide (5) with light film of lubricating oil.
2. Install crosshead (1) on cylinder head guide (5) with adjusting screw (2) pointing toward exhaust manifold side of engine.
3. Hold crosshead (1) down so it contacts valve stem (6) on side opposite adjusting screw (2).
4. Turn adjusting screw (2) until it contacts valve stem (4).

NOTE

Ensure adjusting screw is just lightly seated.

5. Place dial indicator over center of crosshead (1).

3-16. VALVE CROSSHEAD MAINTENANCE (Contd)

6. Press down on crosshead (1) and zero dial indicator.
7. Holding crosshead (1) down, turn adjusting screw (2) until dial indicator reads 0.025-0.040 in. (0.635-1.016 mm).
8. Tighten adjusting nut (3) 22-26 lb-ft (30-35 N•m).

NOTE

If minimum clearance is not 0.025 in. (0.635 mm), turn adjusting screw one-third the distance of one hex on replacement crosshead and cylinder head guide or one-half the distance of one hex on original crosshead and cylinder head guide. Retighten adjusting nut and check clearance.

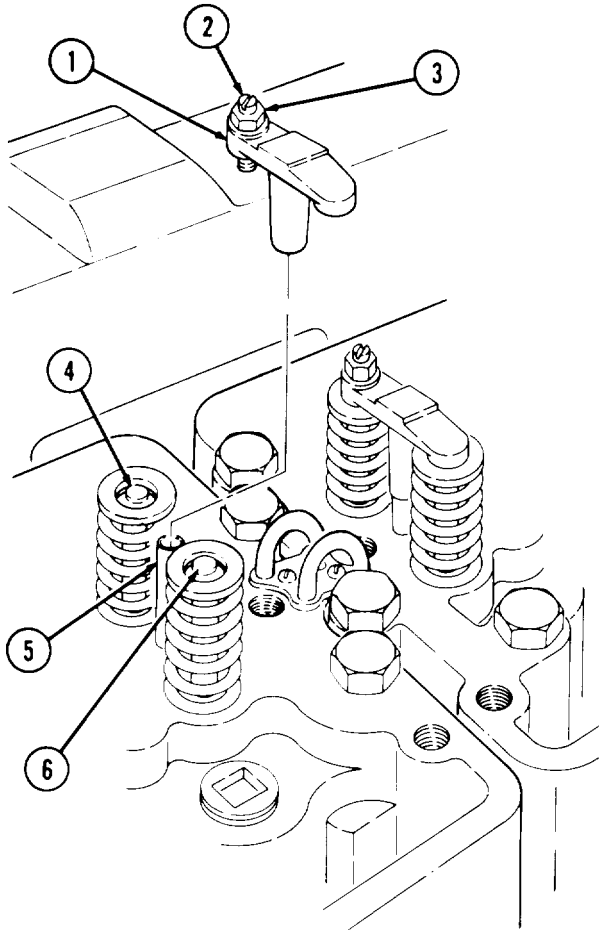

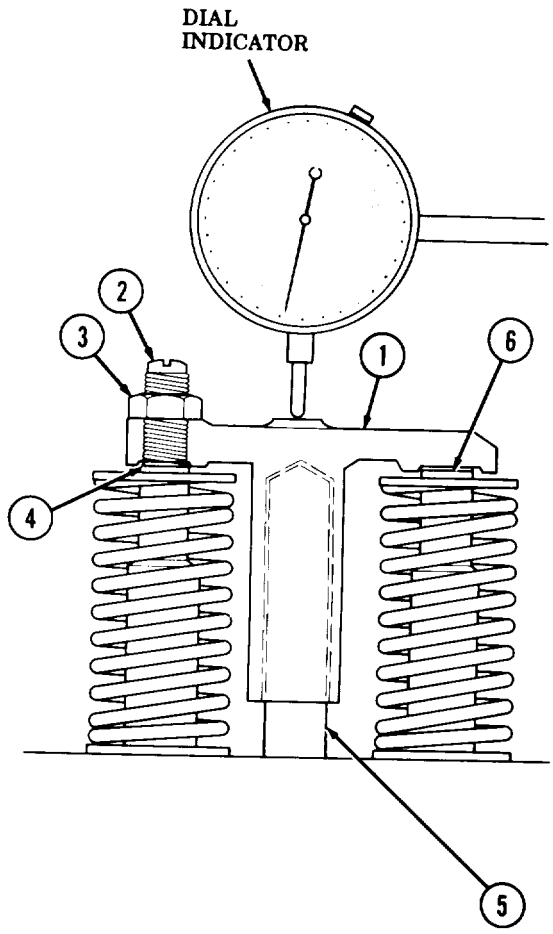

FOLLOW-ON TASK: Install rocker lever housing and push tubes (para. 3-15).

3-17. FUEL CROSSOVER CONNECTOR REPLACEMENT

THIS TASK COVERS:

a. Removal **b. Installation**

INITIAL SETUP

APPLICA8LE MODELS
All

TOOLS
General mechanic's tool kit (Appendix B, Item 1)
Torque wrench, 318-in. dr. (Appendix B, Item 4)
Socket driver, 318-in. dr. (Appendix B, Item 144)

MATERIALS/PARTS
Four screw-assembled lockwashers (Appendix D, Item 383)
Four O-rings (Appendix D, Item 270)

REFERENCES (TM)
TM 9-2320-260-10
TM 9-2320 -260-34P-1

EQUIPMENT CONDITION
- Parking brake set (TM 9-2320-260-10).
- Rocker lever housing and push tubes removed (para. 3-15).

GENERAL SAFETY INSTRUCTIONS
Diesel fuel is flammable. Do not perform this task near open flame.

WARNING

Diesel fuel is flammable. Do not perform fuel system procedures near open flame. Injury to personnel may result.

NOTE

All fuel crossover connectors are replaced the same way. This procedure covers one fuel crossover connector.

a. Removal

Remove four screw-assembled lockwashers (1), fuel crossover connector (2), and four O-rings (4) from cylinder heads (3). Discard O-rings (4) and screw-assembled lockwashers (1).

b. Installation

Install four new O-rings (4) and fuel crossover connector (2) on cylinder heads (3) with four new screw-assembled lockwashers (1). Tighten screw-assembled lockwashers (1) 34-38 lb-in. (3.8-4.3 N•m).

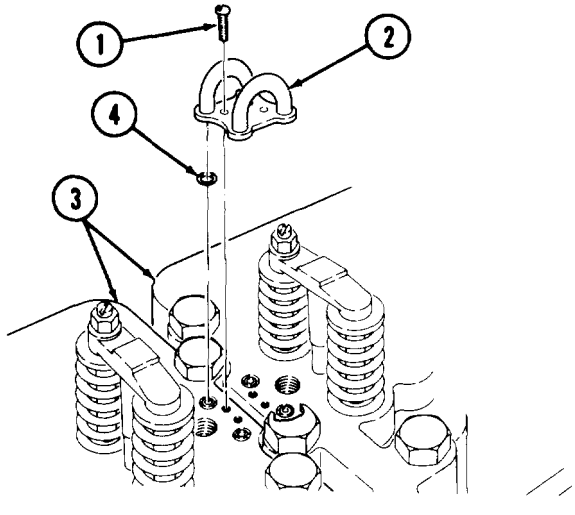

FOLLOW-ON TASK: Install rocker lever housing and push tubes (para. 3-15).

3-18. CYLINDER HEADS REPLACEMENT

THIS TASK COVERS:

a. Removal **b. Installation**

INITIAL SETUP

APPLICABLE MODELS
All

TOOLS
General mechanic's tool kit (Appendix B, Item 1)
Torque wrench, 3/8-in. dr. (Appendix B, Item 4)
Torque wrench, 1/2-in. dr. (Appendix B, Item 3)
Torque wrench, 3/4-in. dr. (Appendix B, Item 2)

MATERIALS/PARTS
Gasket (Appendix D, Item 89)

REFERENCES (TM)
TM 9-2320-260-20
TM 9-2320 -260-34P-1

EQUIPMENT CONDITION
- Fuel supply and return lines removed (TM 9-2320-260-20).
- Water manifold removed (para. 6-3).
- Exhaust manifold removed (para. 3-11).
- Intake manifold removed (para. 3-10).
- Valve crossheads removed (para. 3-16).
- Fuel crossover connectors removed (para. 3-17).

NOTE
- All cylinder heads are replaced the same way. This procedure covers number 1 cylinder head.
- Mark cylinder head for installation.
- For disassembly, cleaning, inspection, and assembly of cylinder heads, refer to para. 3-51.

a. Removal

1. Remove twelve screws (1) and washers (2) from cylinder head (3) and cylinder block (6) in reverse order of tightening sequence as shown.
2. Remove cylinder head (3) and gasket (4) from cylinder block (6). Discard gasket (4).

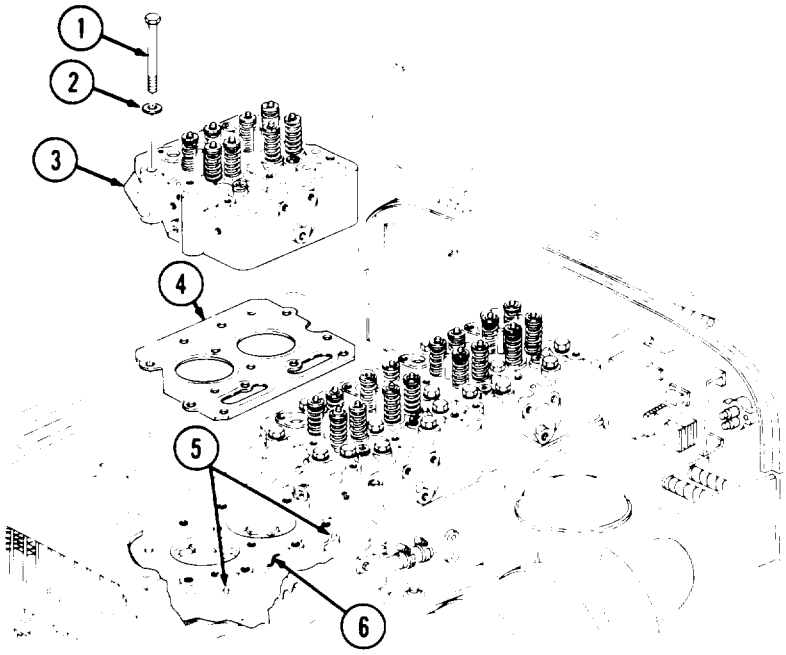

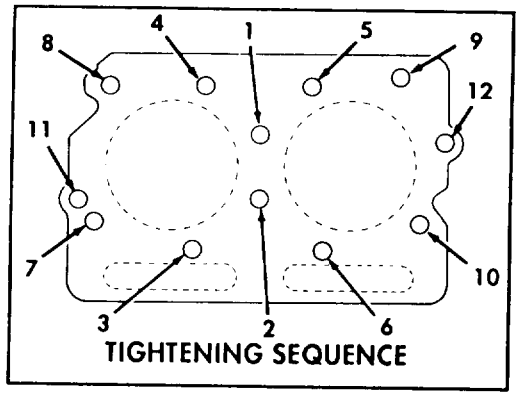

3-18. CYLINDER HEADS REPLACEMENT (Contd)

b. Installation

NOTE

Ensure word "top" is facing up on cylinder block when installing gasket.

1. Position new gasket (4) over dowels (5) on cylinder block (6).
2. Install cylinder head (3) on cylinder block (6) with twelve washers (2) and screws (1).
3. Tighten screws (1) in sequence shown using the following steps:
   a. Tighten screws (1) 20-25 lb-fl (27-34 N•m).
   b. Tighten screws (1) 80-100 lb-ft (109-136 N•m).
   c. Tighten screws (1) 265-305 lb-ft (359-414 N•m).

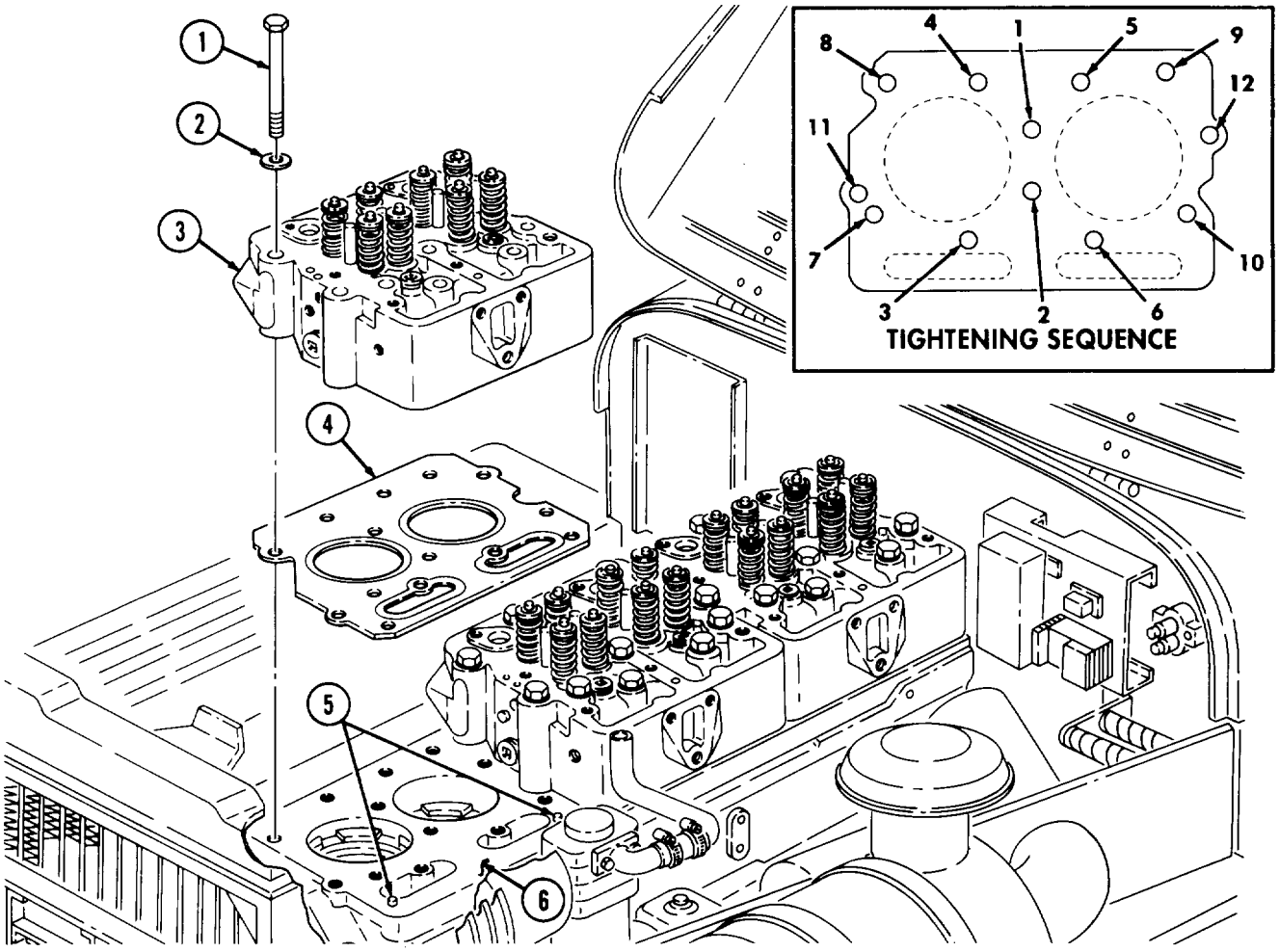

FOLLOW-ON TASKS:
- Install fuel crossover connectors (para. 3-17).
- Install valve crossheads (para. 3-16).
- Install intake manifold (para. 3-10).
- Install exhaust manifold (para. 3-11).
- Install water manifold (para. 6-3).
- Install fuel supply and return lines (TM 9-2320-260-20).

3-19. CAM FOLLOWER HOUSING MAINTENANCE

THIS TASK COVERS:

a. Removal
b. Disassembly
c. Cleaning and Inspection
d. Repair
e. Assembly
f. Installation

INITIAL SETUP

APPLICABLE MODELS
All

TOOLS
General mechanic's tool kit (Appendix B, Item 1)
Torque wrench, 3/8-in. dr. (Appendix B, Item 4)
Outside micrometer (Appendix B, Item 8)
Arbor press (Appendix B, Item 7)
Inside micrometer (Appendix B, Item 9)
Nano reamer set (Appendix B, Item 112)
Soft-head hammer (Appendix B, Item 47)
Drill press (Appendix B, Item 53)
Countersink tool set (Appendix B, Item 138)

MATERIALS/PARTS
Gasket (Appendix D, Item 155)
Six screw-assembled lockwashers (Appendix D, Item 391)
Two plugs (Appendix D, Item 322)
Lubricating oil (Appendix C, Item 21)
Drycleaning solvent (Appendix C, Item 48)
Bar soap (Appendix C, Item 46)
Blue pigment (Appendix C, Item 26)
Screw (Appendix C, Item 35)

REFERENCES (TM)
TM 9-2320-260-10
TM 9-2320-260-34P-1

EQUIPMENT CONDITION
- Parking brake set (TM 9-2320-260-10).
- Fuel pump removed (for cylinder 3 and 4) (para. 5-13).
- Air compressor removed (for cylinder 1 and 2) (para. 11-3).
- Rocker lever housing and push tubes removed (para. 3-15).

GENERAL SAFETY INSTRUCTIONS
- Keep fire extinguisher nearby when using drycleaning solvent.
- Compressed air source will not exceed 30 psi (207 kPa).
- Eyeshields must be worn when cleaning with compressed air.

a. Removal

CAUTION

Do not discard cam follower housing gasket before measuring total thickness of each gasket. Total thickness of all gaskets is critical for seating of cam followers on camshaft for correct injector and valve timing. Damage to engine will result if gasket spacing is not correct when installing cam followers.

NOTE

- All cam follower housings are removed basically the same way. This procedure is for number 5-6 cam follower housing.
- Tag cam follower housing(s) for installation.

3-19. CAM FOLLOWER HOUSING MAINTENANCE (Contd)

1. Remove screw-assembled lockwasher (5) and clamp (6) from cam follower housing (3). Discard screw-assembled lockwasher (5).
2. Remove five screw-assembled lockwashers (4), cam follower housing (3), and gasket (2) from engine (1). Discard screw-assembled lockwashers (4).

NOTE

Tag cam follower housings for installation.

3. Measure and record thickness of gaskets (2). Thickness should be 0.014-0.125 in. (0.36-3.2 mm). Discard gasket (2).

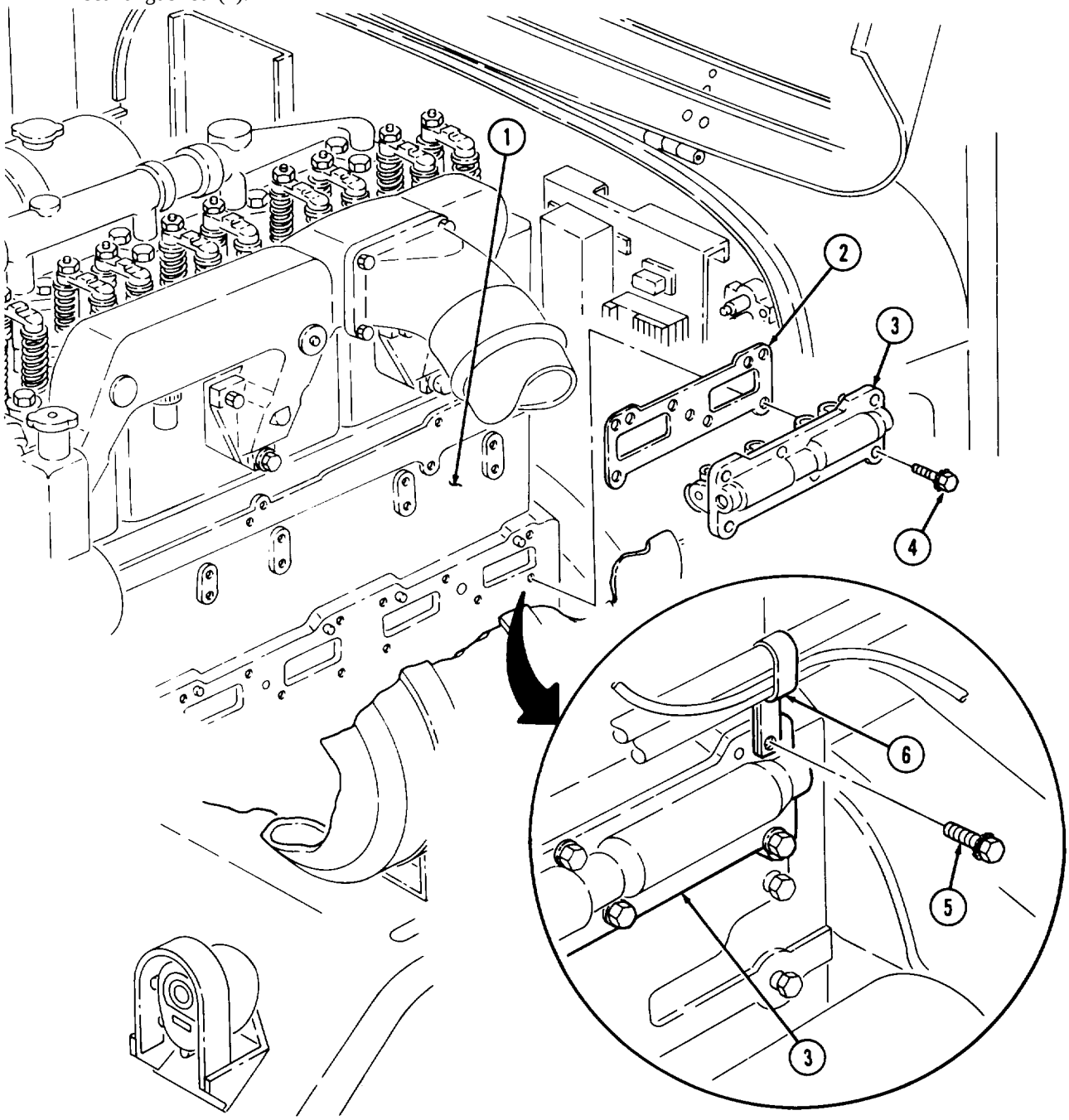

3-19. CAM FOLLOWER HOUSING MAINTENANCE (Contd)

b. Disassembly

1. Remove two setscrews (8) from cam follower housing (3).

NOTE

Mark location of each cam follower lever for installation.

2. Using hammer and punch, remove plug (9) from end of cam follower housing (3). Discard plug (9).
3. Using arbor press, remove two follower shafts (10) and plug (11) from opposite end of cam follower housing (3). Discard plug (11).
4. Remove six cam follower levers (7) from cam follower housing (3).
5. Remove retaining pin (12) from cam follower levers (7) and roller pins (13).
6. Using arbor press, remove roller pins (13) and rollers (14) from cam follower levers (7).

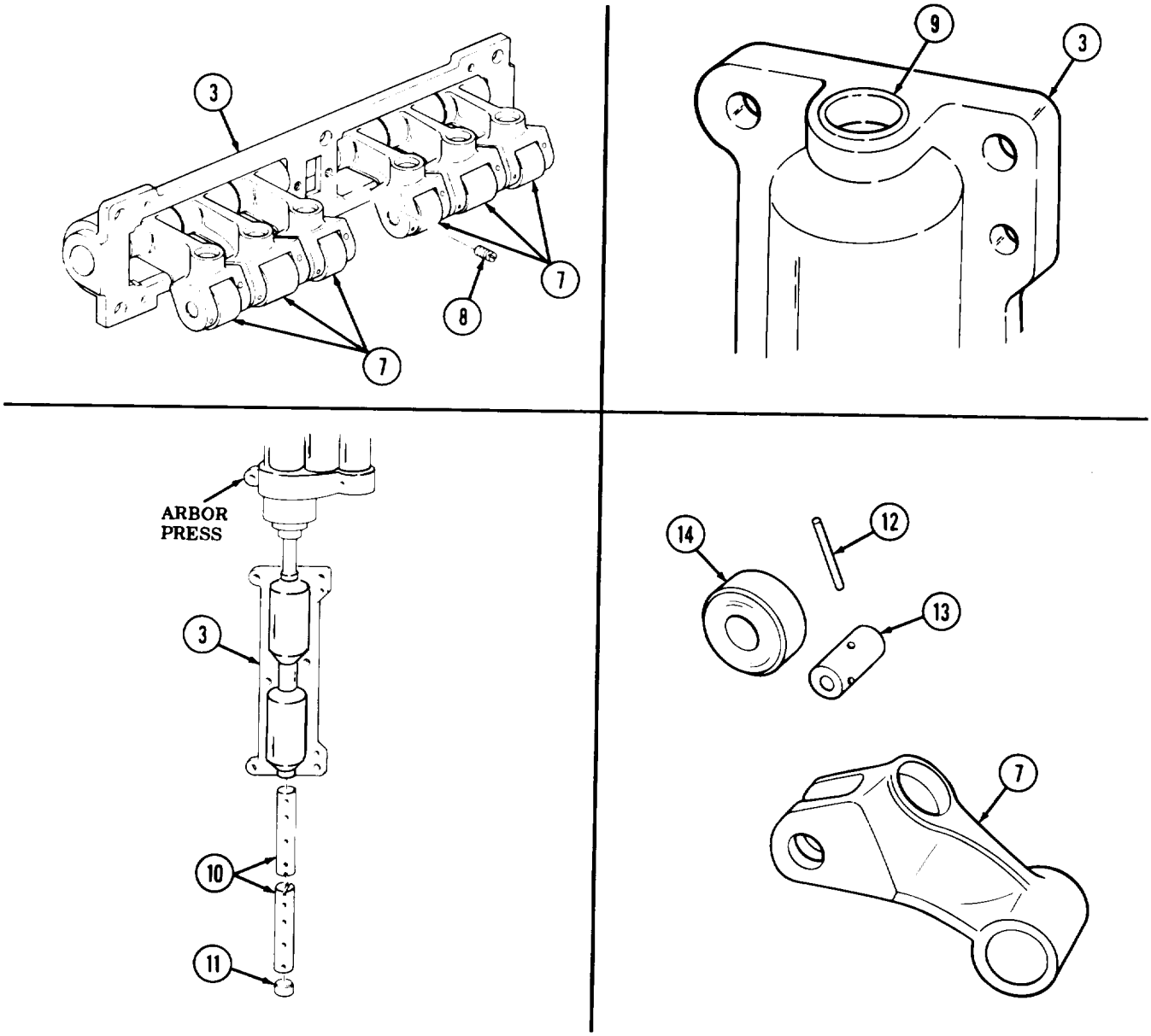

3-19. CAM FOLLOWER HOUSING MAINTENANCE (Contd)

c. Cleaning and Inspection

1. For general cleaning instructions, refer to para. 2-8.
2. For general inspection instructions, refer to para. 2-9.
3. Measure outside diameter of follower shaft(s) (1). Replace follower shaft(s)(1) if worn less than 0.748 in. (19.00 mm).
4. Measure inside diameter of roller(s) (2). Replace roller(s) (2) if worn more than 0.503 in. (12.78 mm) for exhaust and intake valve roller(s), 0.505 in. (12.83 mm) for fuel injector cam roller(s).
5. Measure outside diameter of roller(s) (2). Replace roller(s) (2) if worn less than 1.248 in. (31.70 mm) for exhaust and intake valve roller(s), 1.248 in. (31.70 mm) for fuel injector cam roller(s).
6. Measure outside diameter of roller pin(s) (3). Replace roller pin(s) (3) if worn less than 0.497 in. (12.62 mm).
7. Measure roller pin bore (5) of cam follower lever(s) (4). Replace cam follower lever(s) (4) if roller pin bore (5) measurement is more than 0.4990-0.4997 in. (12.675-12.692 mm).
8. Measure inside diameter of cam follower lever bushing(s) (6). Replace cam follower lever bushing(s) (6) if worn more than 0.752 in. (19.10 mm).
9. Apply pigment to ball end of new push tube (9) and insert in socket (10) of cam follower lever (4). Check that socket (10) is not out-of-round. Discard if less than 80% of ball end of new push tube (9) is pigmented.

d. Repair

NOTE

Perform steps 1 through 7 if bushing requires replacement.
Ensure all metal chips are removed from bushing surface.

1. Using arbor press, remove cam follower lever bushing (6) from cam follower lever (4). Discard cam follower lever bushing (6).
2. Aline oil holes (7) and (8) in new cam follower lever bushing (6) and cam follower lever (4).
3. Using arbor press, install new cam follower lever bushing (6) in cam follower lever (4).
4. Put soap in oil hole (7) of cam follower lever bushing (6).
5. Using countersink tool, cut a 60° chamfer at each end of cam follower lever bushing (6).
6. Using Nano reamer, cut bore of bushing (6) 0.7501-0.7511 in. (19.053-19.078 mm).

WARNING

- Drycleaning solvent is flammable and will not be used near open flame. Use only in well-ventilated places. Failure to do so may result in injury to personnel.
- Compressed air source will not exceed 30 psi (207 kPa). When cleaning with compressed air, eyeshields must be worn. Failure to wear eyeshields may result in injury to personnel.

7. Remove soap from oil hole (7) with drycleaning solvent and dry with compressed air.

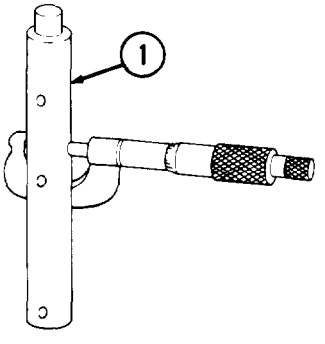

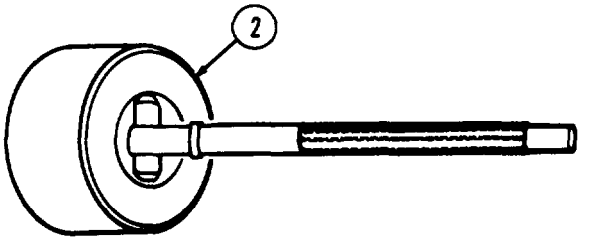

3-19. CAM FOLLOWER HOUSING MAINTENANCE (Contd)

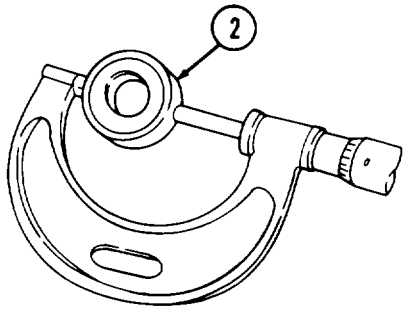

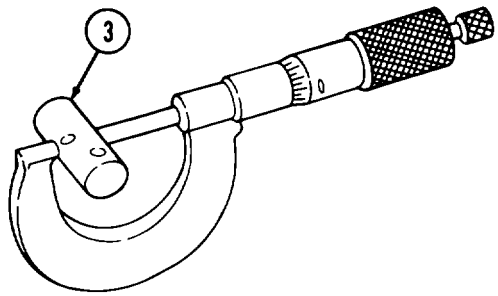

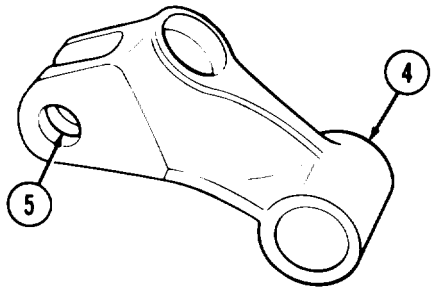

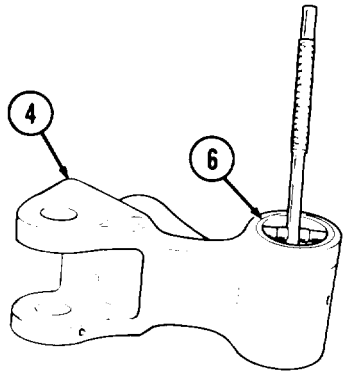

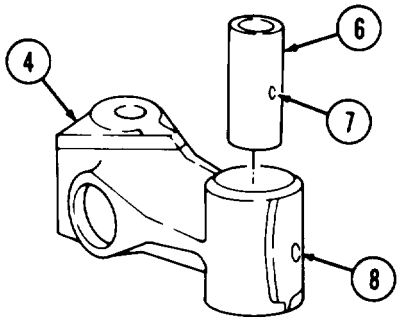

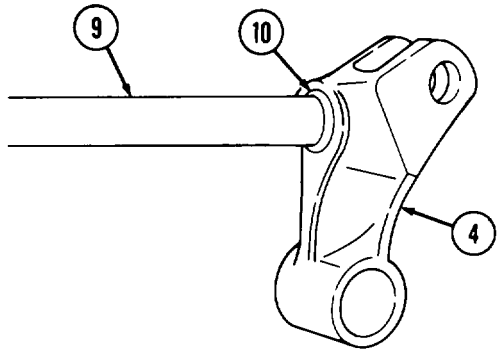

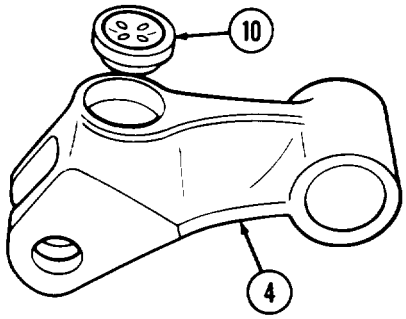

3-19. CAM FOLLOWER HOUSING MAINTENANCE (Contd)

e. Assembly

NOTE

- Lightly oil all parts before assembly.
- Use new push tubes if new sockets were installed.

1. Install roller (4) in cam follower lever (1).
2. Holding 0.006 in. (0.152 mm) feeler gage between cam follower lever (1) and roller (4), aline hole in roller pin (2) with hole in cam follower lever (1) and press roller pin (2) through cam follower lever (1) and roller (4).
3. Insert retaining pin (3) into cam follower lever (1) and roller pin (2).

NOTE

Ensure cam follower levers are positioned in cam follower housing in previously marked locations.

4. Position six cam follower levers (1) in cam follower housing (6).
5. Aline holes in two follower shafts (5) with holes in cam follower housing (6) and insert follower shafts (5) through cam follower housing (6) and cam follower levers (1).
6. Insert two setscrews (7) into cam follower housing (6) and follower shafts (5).

CAUTION

Press two plugs into housing until flush with cam follower housing to avoid screw breakage.

7. Install two new plugs (8) into cam follower housing (6).

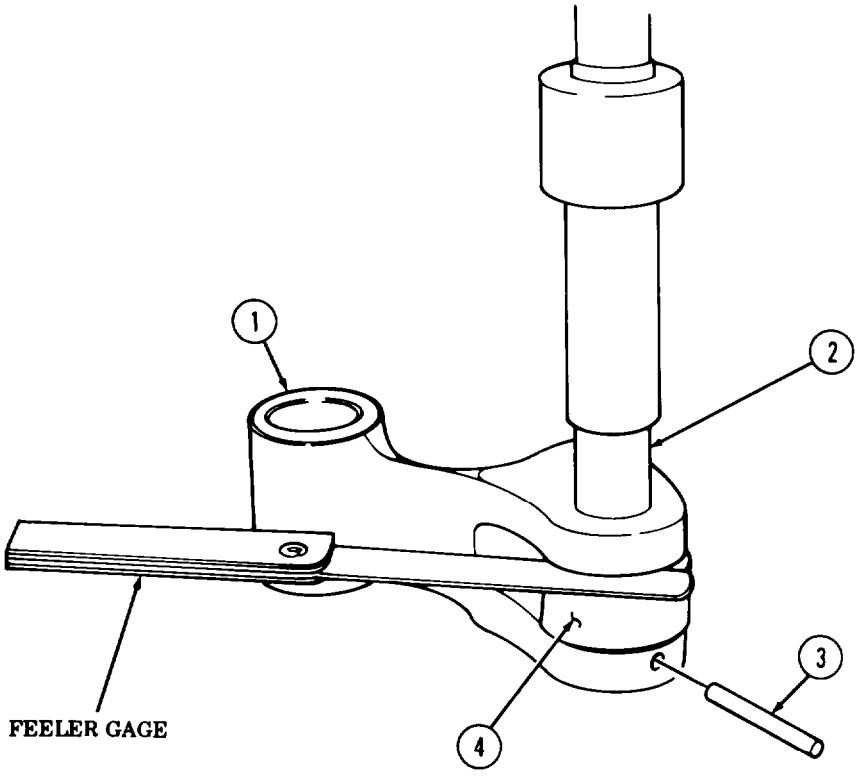

3-19. CAM FOLLOWER HOUSING MAINTENANCE (Contd)

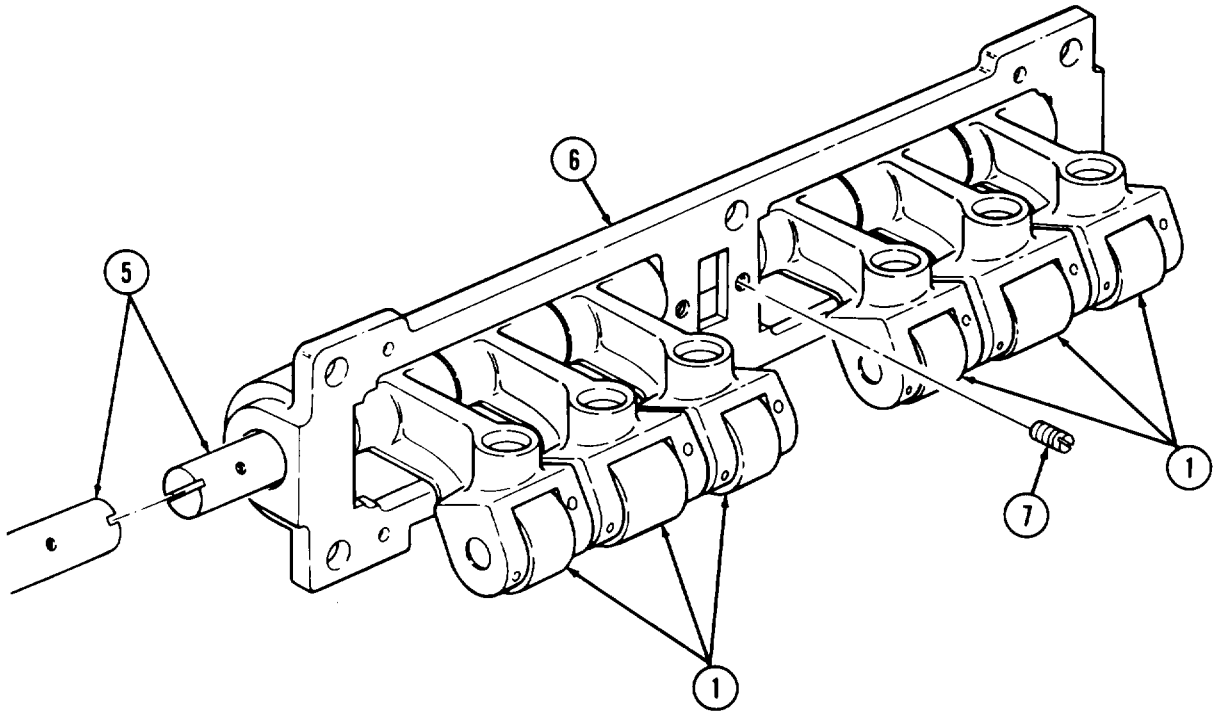

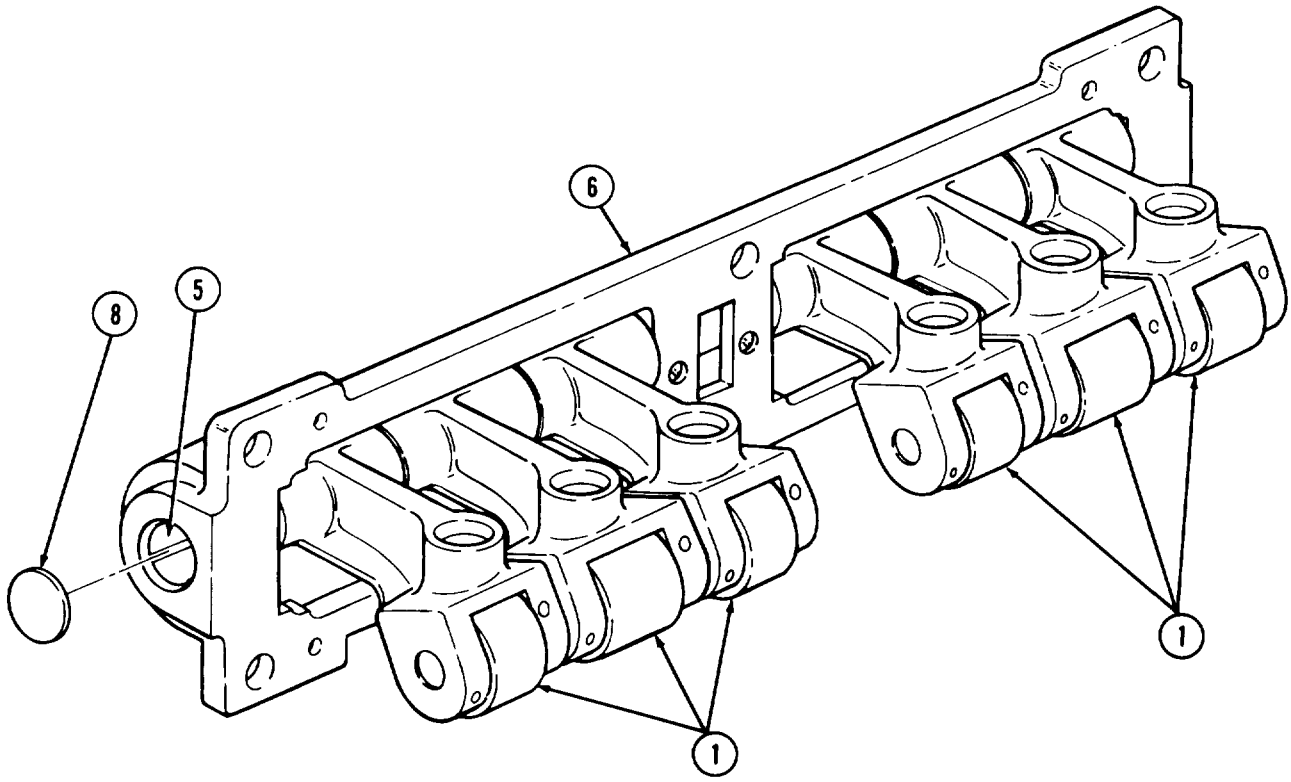

3-19. CAM FOLLOWER HOUSING MAINTENANCE (Contd)

f. Installation

CAUTION

- Ensure cam follower housing levers have been lubricated before installation.
- If old cam follower housing assemblies are being installed, ensure they are installed in the same location from which they were removed.

NOTE

Check measurement of gasket previously removed. Thickness must be the same as original gasket in the range of 0.014-0.125 in. (0.36-3.2 mm).

1. Measure new gasket (3) thickness.
2. Position gasket (3) on cylinder block (1) with sealing surface facing outward.
3. Install cam follower housing (4) on cylinder block (1). Tap with soft-head hammer to seat on dowels (2).
4. Install five new screw-assembled lockwashers (5) on cam follower housing (4). Finger tighten screw-assembled lockwashers (5).
5. Install clamp (7) on cam follower housing (4) with new screw-assembled lockwasher (6). Tighten screw-assembled lockwashers (5) and (6) 15 lb-ft (20 N•m) in sequence shown.
6. Tighten screw-assembled lockwashers (5) and (6) 30-35 lb-ft (41-48 N•m) in sequence shown.

3-19. CAM FOLLOWER HOUSING MAINTENANCE (Contd)

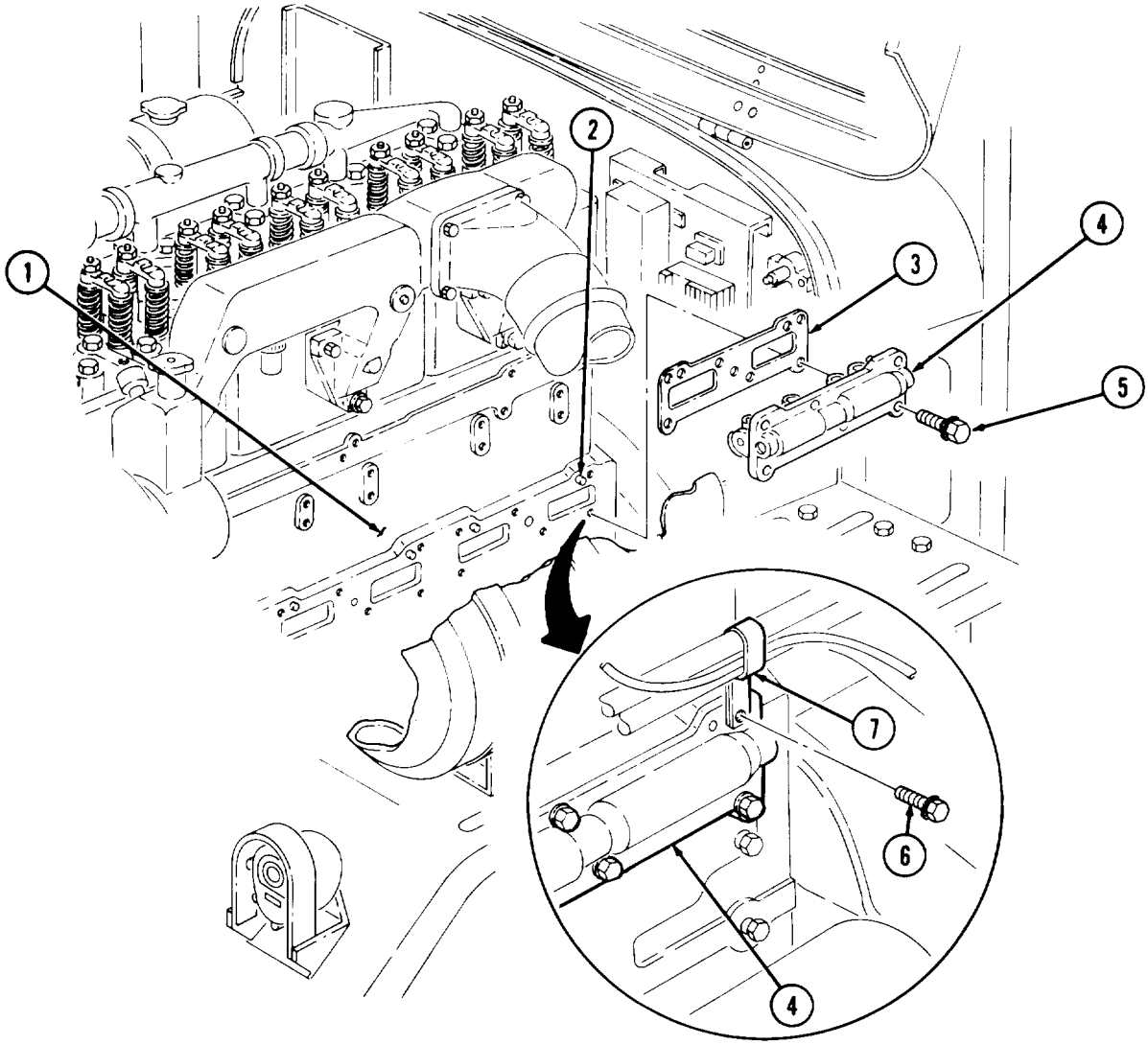

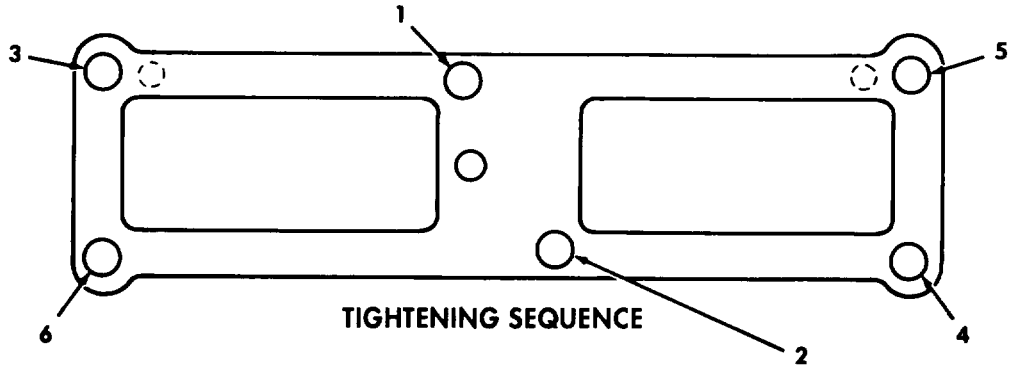

FOLLOW-ON TASKS:
- Install rocker lever housings and push tubes (para. 3-15).
- Install air compressor (if removed) (para. 11-3).
- Install fuel pump (if removed) (para. 5-13).

3-20. OIL PAN MAINTENANCE

THIS TASK COVERS:

a. Removal
b. Disassembly
c. Cleaning and Inspection
d. Assembly
e. Installation

INITIAL SETUP

APPLICABLE MODELS
All

TOOLS
General mechanic's tool kit (Appendix B, Item 1)
Torque wrench, 3/8-in. dr. (Appendix B, Item 4)

MATERIALS/PARTS
Gasket (Appendix D, Item 67)
Gasket (Appendix D, Item 111)
Gasket (Appendix D, Item 63)
Forty lockwashers (Appendix D, Item 217)
Four lockwashers (Appendix D, Item 247)

MATERIALS/PARTS (Contd)
Sealing compound (Appendix C, Item 43)
Antiseize tape (Appendix C, Item 50)

REFERENCES (TM)
LO 9-2320-260-12
TM 9-2320-260-20
TM 9-2320-260-34P-1

EQUIPMENT CONDITION
- Engine oil drained (TM 9-2320-260-20).
- Engine oil pan shroud removed (if so equipped) (TM 9-2320-260-20).

a. Removal

NOTE

- Have drainage container ready to catch engine oil.
- Engine oil pan is mounted with screw-assembled washers on late model engine.

1. Remove oil return hose (1) from aerator (14) and allow oil to drain completely.
2. Remove oil pickup hose (22) from suction flange (13).
3. Remove front sump tube (19) from adapter (18).
4. Remove oil dipstick tube (3) from adapter (8).
5. Remove two screws (26), lockwashers (25), washers (24), clamps (23), oil pickup hose (22), and oil return hose (1) from oil pan (12). Discard lockwashers (25).
6. Remove four screws (11), lockwashers (10), and washers (9) from rear of oil pan (12) and cylinder block (21). Discard lockwashers (10).
7. Remove seven screws (6), lock washers (5), and washers (4) from oil pan (12) and flywheel housing (2). Discard lockwashers (5).
8. Remove thirty-eight screws (15), lock washers (16), washers (17), oil pan (12), and gasket (7) from cylinder block (21) and front gearcase cover (20). Discard lockwashers (16) and gasket (7).

3-20. OIL PAN MAINTENANCE (Contd)

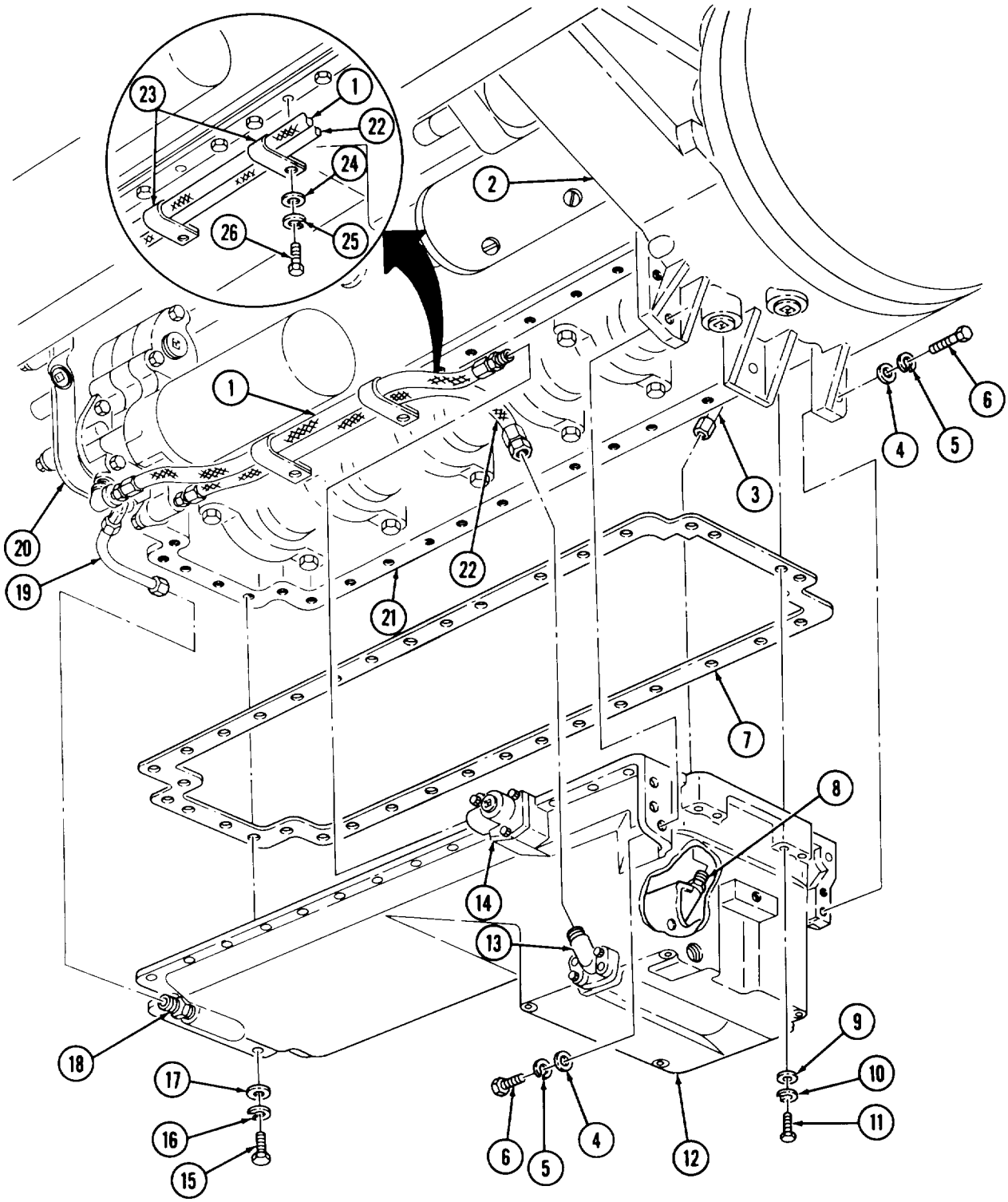

3-20. OIL PAN MAINTENANCE (Contd)

b. Disassembly

1. Remove two screws (10), lockwashers (11), washers (12), suction flange (13), and gasket (14) from oil pan (16). Discard lockwashers(11) and gasket (14).
2. Remove screw (8), two screws (6), three lockwashers (5), washers (4), aerator (9), and gasket (3) from oil pan (16). Discard lockwashers (5) and gasket (3).
3. Remove pipe plug (7) from aerator (9).
4. Remove pipe plugs (18) and (19) from oil pan (16).
5. Remove adapter (15) from oil pan (16).
6. Remove adapter (17) from oil pan (16).
7. Remove four screws (1) and strainer screen (2) from oil pan (16).

c. Cleaning and Inspection

1. For general cleaning instructions, refer to para. 2-8.
2. For general inspection instructions, refer to para. 2-9.
3. For general repair instructions, refer to para. 2-10.
4. Inspect oil pan (16) for cracks, breaks, and stripped threads. Replace oil pan (16) if cracked, broken, or threads are stripped.
5. Inspect strainer screen (2) for tears and damage. Replace strainer screen (2) if torn or damaged.

d. Assembly

1. Install strainer screen (2) on oil pan (16) with four screws (1).
2. Apply antiseize tape to threads of adapter (17) and install adapter (17) on oil pan (16).
3. Apply antiseize tape to threads of adapter (15) and install adapter (15) on oil pan (16).
4. Apply antiseize tape to threads of pipe plugs (18) and (19) and install pipe plugs (18) and (19) on oil pan (16).
5. Apply antiseize tape to threads of pipe plug (7) and install pipe plug (7) on aerator (9).
6. Apply a thin coat of sealing compound to new gasket (3).
7. Install gasket (3) and aerator (9) on oil pan (16) with three washers (4), new lockwashers (5), two screws (6), and screw (8). Tighten screws (6) and (8) 10-12 lb-ft (14-16 N•m).
8. Apply a thin coat of sealing compound to new gasket (14).
9. Install new gasket (14) and suction flange (13) on oil pan (16) with two washers (12), new lock-washers (11), and screws (10). Tighten screws (10) 19-22 lb-ft (26-30 N•m).

3-20. OIL PAN MAINTENANCE (Contd)

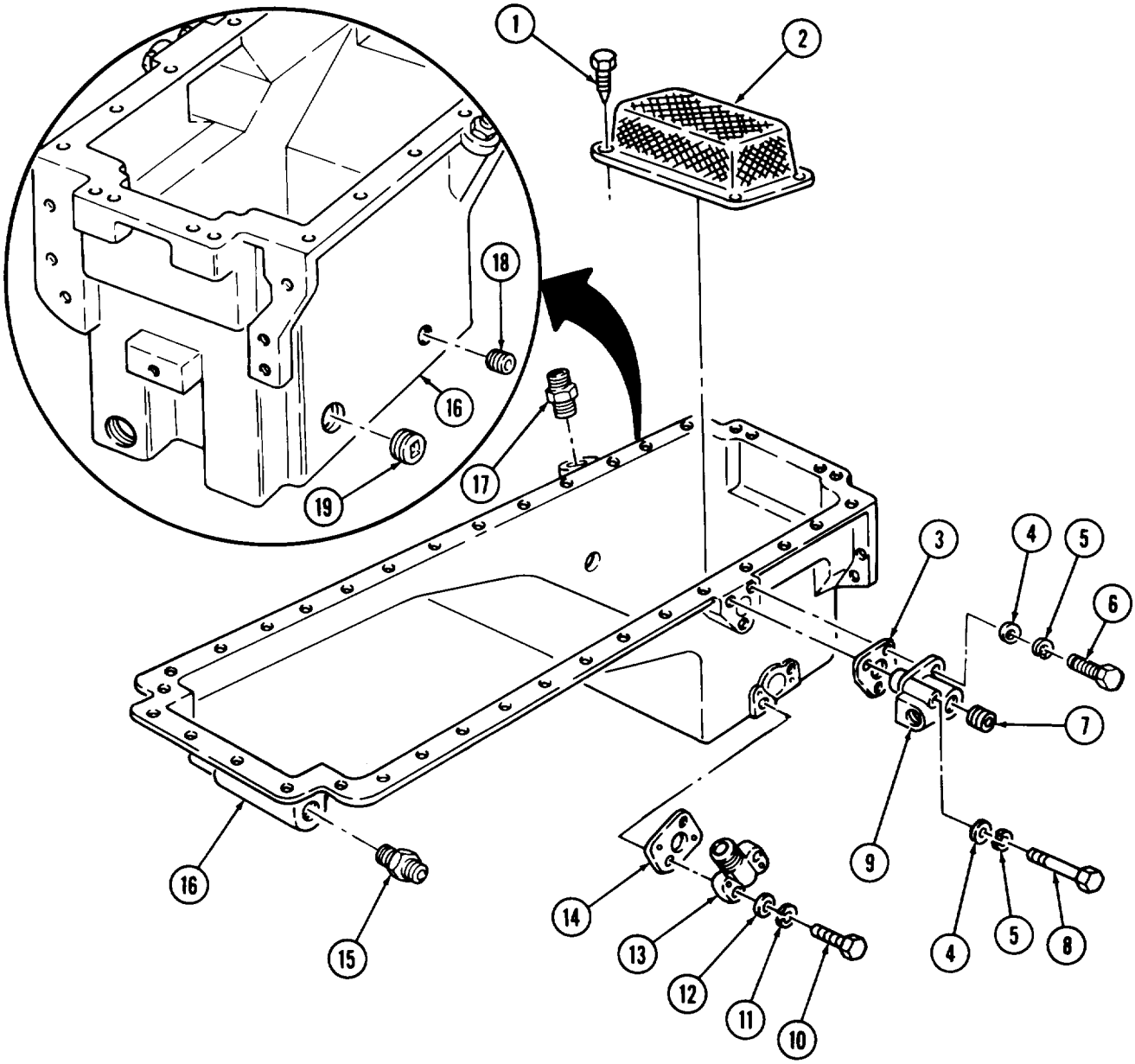

3-20. OIL PAN MAINTENANCE (Contd)

e. Installation

NOTE

- Oil pan is mounted with screw-assembled lockwashers on late model engine.
- Assistant will help with steps 1 through 5.

1. Install new gasket (7) and oil pan (12) on cylinder block (21) and front gearcase cover (20) with thirty-eight washers (17), new lockwashers (16), and screws (15). Finger tighten screws (15).
2. Install four washers (9), new lockwashers (10), and screws (11) on rear of oil pan (12) and cylinder block (21). Finger tighten screws (11).
3. Install seven washers (4), new lockwashers (5), and screws (6) on oil pan (12) and flywheel housing (2). Alternately tighten screws (6) 70-80 lb-ft (95-109 N•m).
4. Alternately tighten screws (15) 35-40 lb-ft (48-54 N•m).
5. Alternately tighten screws (11) 15-40 lb-ft (20-54 N•m).
6. Apply antiseize tape to threads of adapter (8) and install oil dipstick tube (3) on adapter (8).
7. Apply antiseize tape to threads of adapter (18) and install front sump tube (19) on adapter (18).
8. Apply antiseize tape to threads of suction flange (13) and install oil pickup hose (22) on suction flange (13).
9. Apply antiseize tape to threads of aerator (14) and install oil return hose (1) on aerator (14).
10. Install oil pickup hose (22) and oil return hose (1) on oil pan (12) with two clamps (23), washers (24), new lockwashers (25), and screws (26).

3-20. OIL PAN MAINTENANCE (Contd)

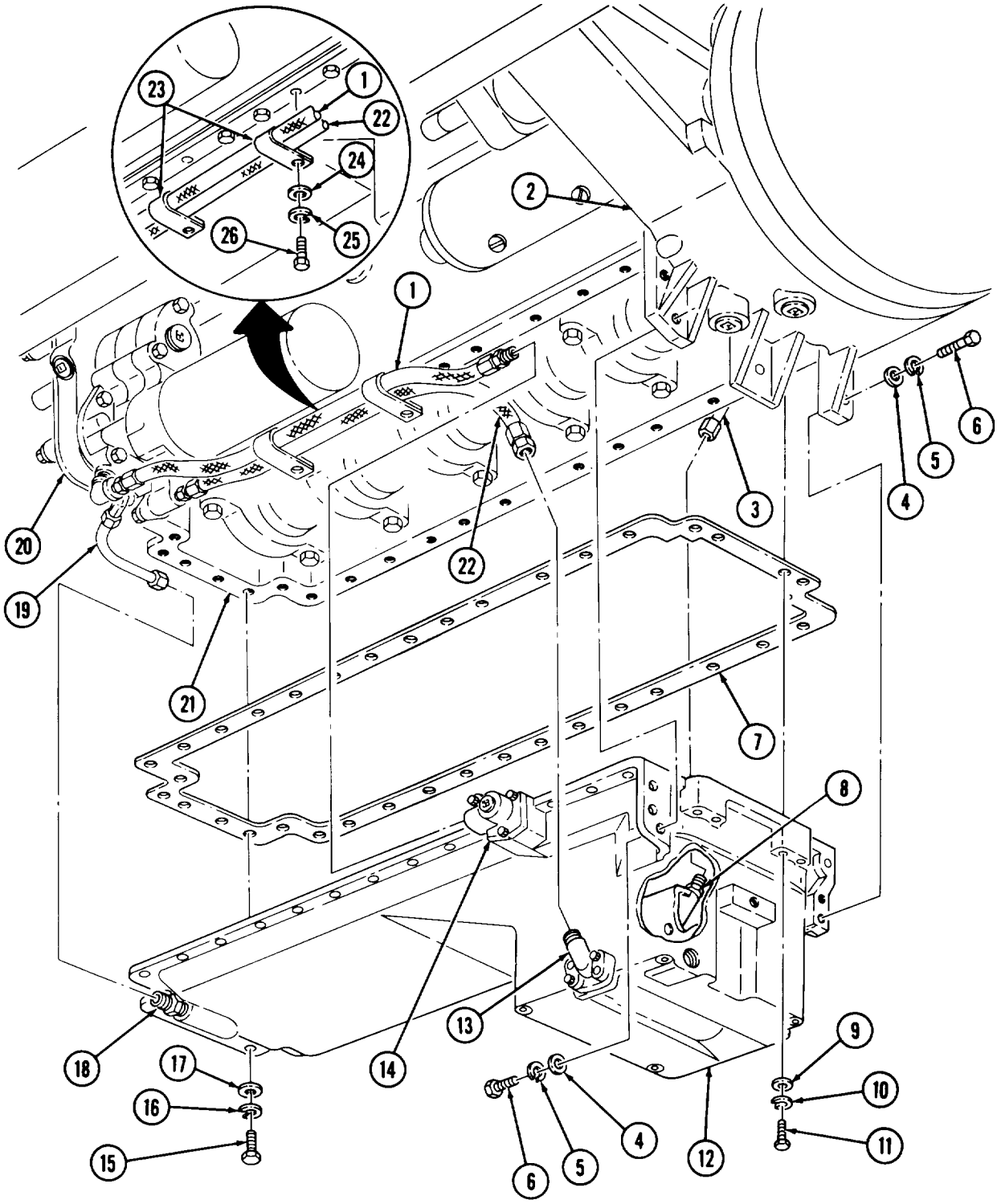

FOLLOW-ON TASK: Refill engine oil and run engine and check for leaks (LO 9-2320-260-12).

3-21. FLYWHEEL AND GEAR REPLACEMENT

THIS TASK COVERS:

a. Flywheel Removal
b. Ring Gear Removal
c. Ring Gear Installation
d. Flywheel Installation

INITIAL SETUP

APPLICABLE MODELS
All

SPECIAL TOOLS
Engine barring tool (Appendix B, Item 66)

TOOLS
General mechanic's tool kit (Appendix B, Item 1)
Soft-head hammer (Appendix B, Item 47)
Torque wrench, 1/2-in. dr. (Appendix B, Item 3)
Two dowel pins (Appendix E, Figure E-1)
Two puller screws (Appendix C, Item 41)

MATERIALS/PARTS
Safety wire (Appendix D, Item 373)
Tempilstik crayon (Appendix C, Item 10)

REFERENCES (TM)
TM 9-2320-260-10
TM 9-2320-260-34P-1

EQUIPMENT CONDITION
- Parking brake set (TM 9-2320-260-10).
- Transmission removed (para. 8-4).
- Clutch and pressure plate removed (para. 4-2).

GENERAL SAFETY INSTRUCTIONS
- Wear gloves at all times when handling heated parts.
- Flywheel is heavy; use caution when removing.

a. Flywheel Removal

1. Remove safety wire (4) from screws (5). Discard safety wire (4).
2. Remove two screws (5) and washers (6) from flywheel (7) and install two dowel pins.
3. Remove four screws (5) and washers (6) from flywheel (7).

WARNING

Flywheel is heavy. Use caution when removing from flywheel housing. Failure to do so may cause injury to personnel.

NOTE

Assistant will help with step 4.

4. Install two puller screws (3) on flywheel (7). Tighten jackscrews (3) alternately and remove flywheel (7) from crankshaft (1).
5. Remove puller screws (3) from flywheel (7).
6. Remove dowel pins from crankshaft (1).

b. Ring Gear Removal

WARNING

Wear gloves at all times when handling heated parts. Failure to do so may cause injury to personnel.

CAUTION

Do not heat ring gear above 600°F (316°C). Overheating of ring gear may cause damage.

3-21. FLYWHEEL AND GEAR REPLACEMENT (Contd)

NOTE

Use tempilstik crayon to mark ring gear.

1. Heat flywheel (7) and ring gear (2) to 600°F (316°C).
2. Using soft-head hammer, tap ring gear (2) from flywheel (7).

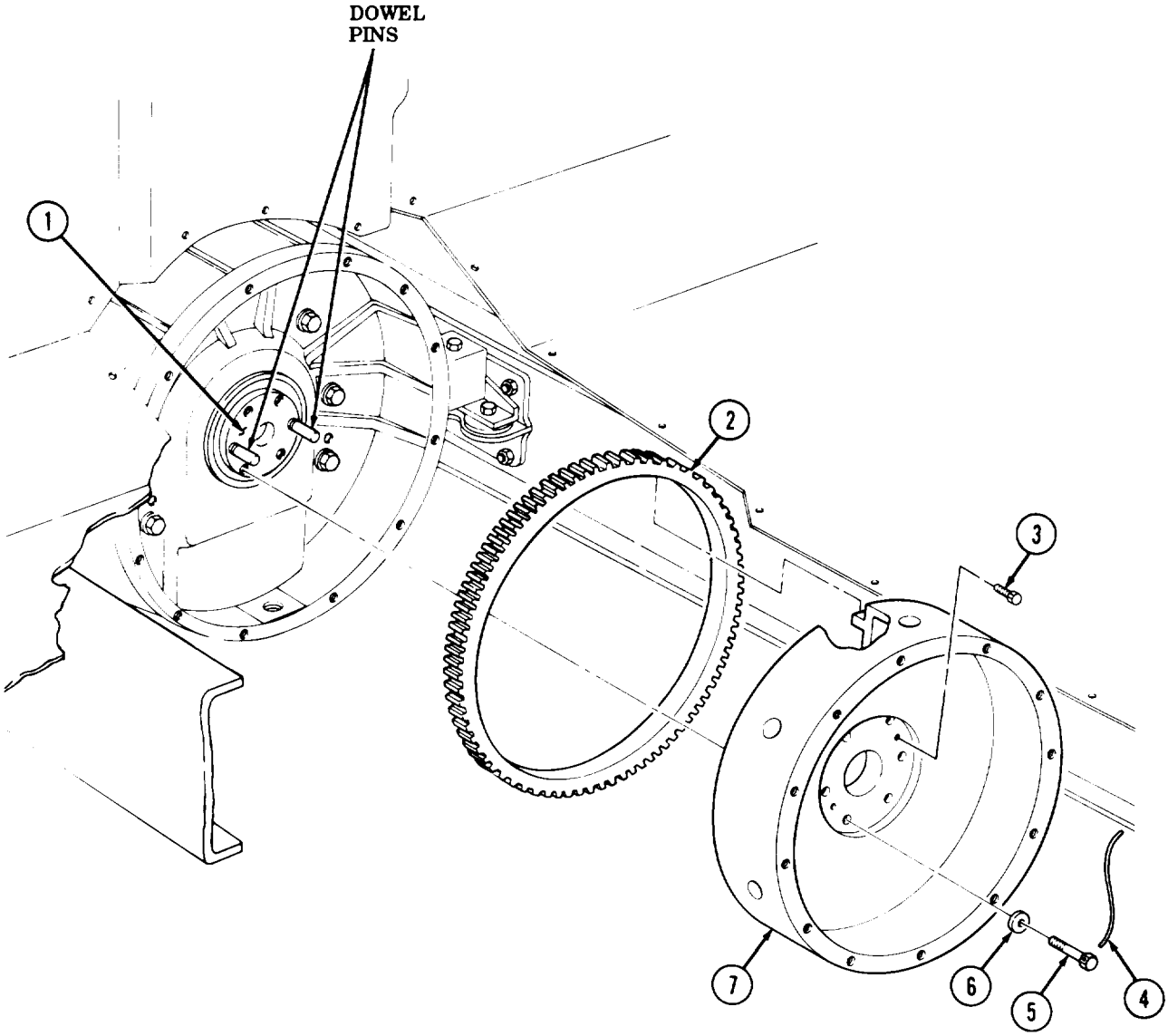

3-21. FLYWHEEL AND GEAR REPLACEMENT (Contd)

c. Ring Gear Installation

WARNING

Wear gloves at all times when handling heated parts. Failure to do so may cause injury to personnel.

CAUTION

Do not heat ring gear above 600°F (316°C). Overheating of ring gear may cause damage.

NOTE

Tempilstik crayon dissolves into a liquid when temperature reaches 600°F (316°C).

1. Using tempilstik crayon, mark ring gear (2) at several places while heating inner diameter.
2. Heat ring gear (2) to 600°F (316°C).
3. Position ring gear (2) on flywheel (6) and tap in place until seated.

d. Flywheel Installation

1. Install two dowel pins on crankshaft (1).

WARNING

Flywheel is heavy. Use caution when installing flywheel on flywheel housing. Failure to do so may cause injury to personnel.

NOTE

Assistant will help with step 2.

2. Position flywheel (6) on dowel pins and crankshaft (1) and install with four washers (5) and screws (4). Finger tighten screws (4).
3. Remove dowel pins and install two washers (5) and screws (4). Using engine barring tool to prevent crankshaft (1) from turning, tighten screws (4) alternately 200-220 lb-ft (271-298 N•m).
4. Install new safety wire (3) on screws (4).

3-21. FLYWHEEL AND GEAR REPLACEMENT (Contd)

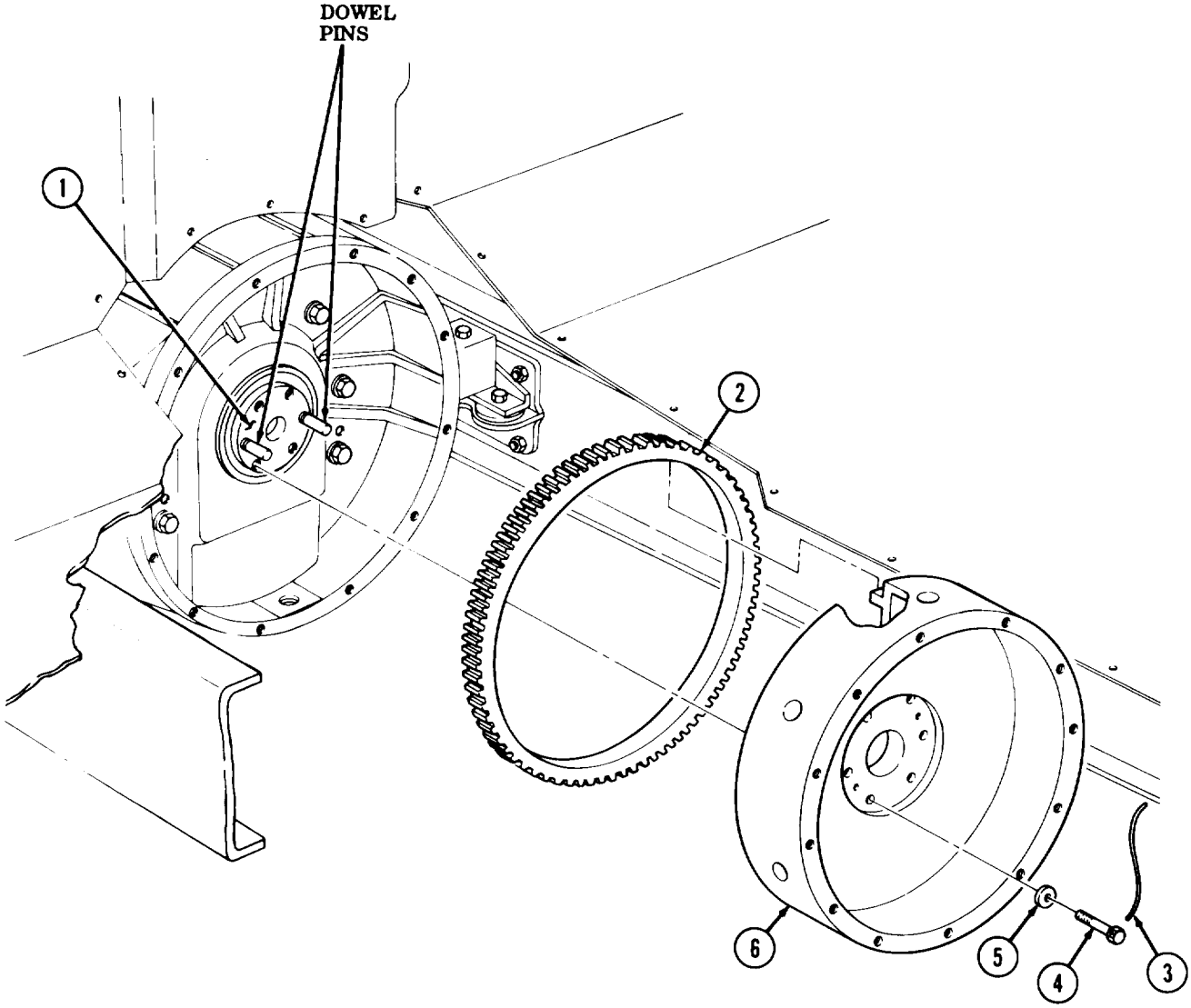

FOLLOW-ON TASKS: • Install clutch and pressure plate (para. 4-2).
• Install transmission (para. 8-4).

3-22. FLYWHEEL HOUSING MAINTENANCE

THIS TASK COVERS:

a. Removal
b. Cleaning and Inspection
c. Installation
d. Adjustment

INITIAL SETUP

APPLICABLE MODELS
All

TOOLS
General mechanic's tool kit (Appendix B, Item 1)
Dial indicator (Appendix B, Item 11)
Dial indicator attachment (Appendix B, Item 85)
Torque wrench, 1/2-in. dr. (Appendix B, Item 3)
Soft-head hammer (Appendix B, Item 47)
Electric drill (Appendix B, Item 64)
Drill and reaming fixture (Appendix B, Item 93)

MATERIALS/PARTS
Nine packings (Appendix D, Item 305)
Nine lockwashers (Appendix D, Item 219)

MATERIALS/PARTS (Contd)
Four screw-assembled lockwashers (Appendix D, Item 391)
Gasket (Appendix D, Item 75)
Chalk (Appendix C, Item 7)

REFERENCES (TM)
TM 9-2320-260-10
TM 9-2320-260-34P-1

EQUIPMENT CONDITION
- Parking brake set (TM 9-2320-260-10).
- Flywheel and gear removed (para. 3-21).

GENERAL SAFETY INSTRUCTIONS
Engine must be supported while performing this task.

WARNING

Engine must be supported while performing this procedure. Failure to do so may cause injury to personnel or damage to equipment.

a. Removal

1. Remove nine screws (7), lockwashers (6), washers (5), and packings (4) from flywheel housing (1). Discard lockwashers (6) and packings (4).
2. Remove four screw-assembled lockwashers (9) from oil pan (8). Discard screw-assembled lockwashers (9).
3. Remove flywheel housing (1) from cylinder block (2) and dowel pins (3), using wood block and soft-head hammer.
4. Remove gasket (10) from flywheel housing (1). Discard gasket (10).

NOTE

Perform step 5 if installing new flywheel housing,

5. Remove two dowel pins (3) from cylinder block (2).

b. Cleaning and Inspection

1. For general cleaning instructions, refer to para. 2-8.
2. For general inspection instructions, refer to para. 2-9.
3. Inspect two dowel pins (3) for cracks and bends. Measure outside diameter of dowel pins (3) for wear. Replace dowel pins (3) if removed, damaged, or if outside diameter is less than 0.5005 in. (12.71 mm).

3-22. FLYWHEEL HOUSING MAINTENANCE (Contd)

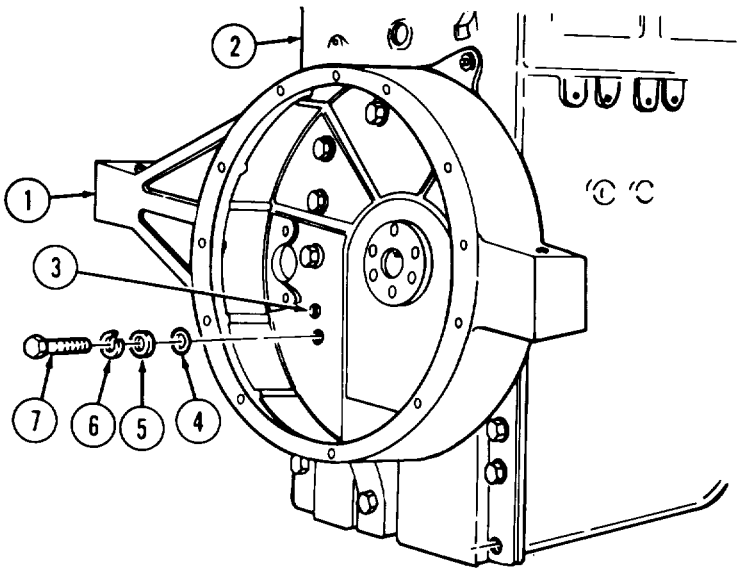

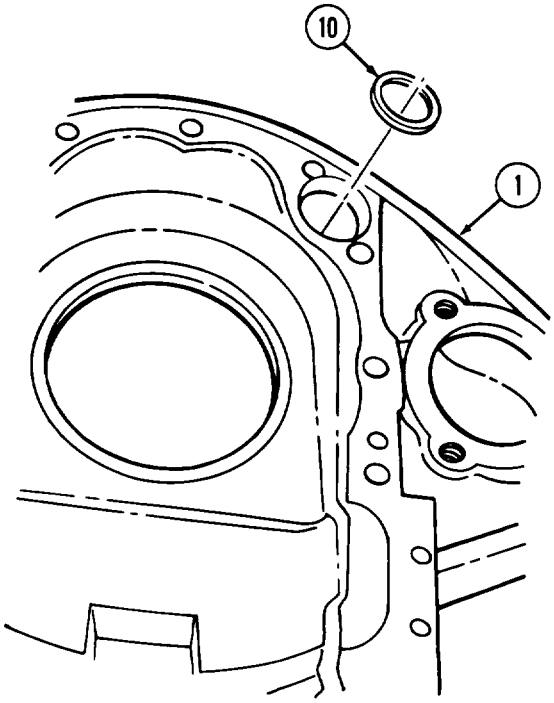

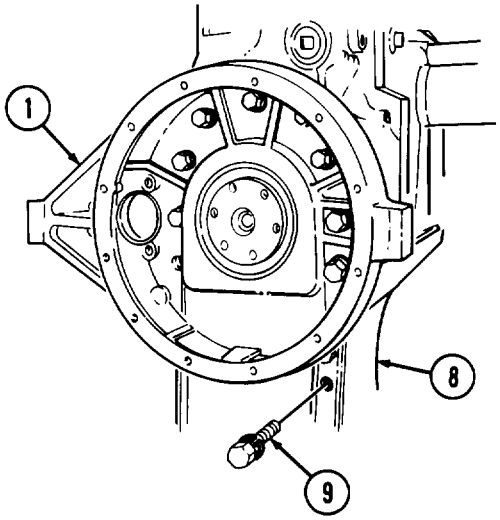

3-22. FLYWHEEL HOUSING MAINTENANCE (Contd)

c. Installation

1. Install new gasket (1) into flywheel housing (2).
2. Install flywheel housing (2) over dowel pins (10) and seat against engine block (3).

NOTE

Flywheel housing may have to be shifted during alinement.

3. Install nine new packings (6), washers (7), new lockwashers (8), and screws (9) in flywheel housing (2).
4. Install four new screw-assembled lockwashers (5) on oil pan (4).

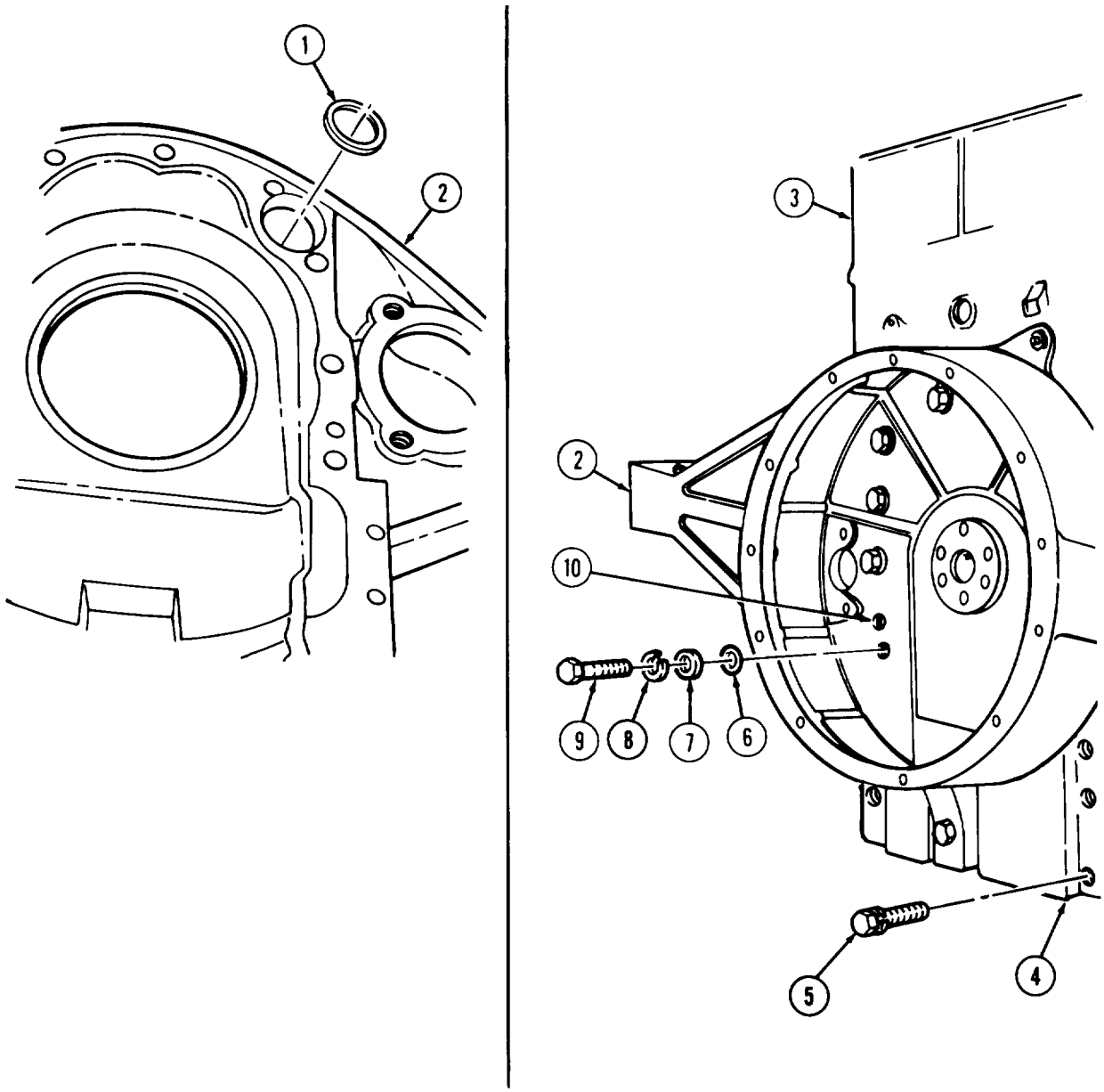

3-22. FLYWHEEL HOUSING MAINTENANCE (Contd)

d. Adjustment

NOTE

Flywheel bore must be centered to crankshaft rotation. Follow steps 1 through 15 using a dial indicator with dial gage attachment.

1. Attach dial indicator attachment to crankshaft flange (11) and position dial indicator plunger against flywheel housing bore (12).
2. Mark flywheel housing (2) with chalk at 3, 6, 9, and 12 o'clock positions.
3. Set dial indicator to zero. Position dial indicator plunger at 3 o'clock position by rotating crankshaft flange (11).

NOTE

The highest reading recorded in steps 4 and 5 determines the up or down direction the flywheel housing must be moved.

4. Rotate crankshaft flange (11) on flywheel housing (2) clockwise from 3 o'clock to 9 o'clock position. Record the highest reading.
5. Rotate crankshaft flange (11) on flywheel housing (2) clockwise from 9 o'clock to 3 o'clock position. Record the highest reading.
6. Rotate crankshaft. flange (11) on flywheel housing (2) and indicator attachment to point on flywheel housing bore (12) where highest reading was recorded.
7. Set dial indicator to read one-half of total highest reading.
8. Loosen screws (13) slightly on flywheel housing (2). Tap flywheel housing bore (12), using soft-head hammer, opposite the dial indicator until it reads zero. Finger tighten screws (13).

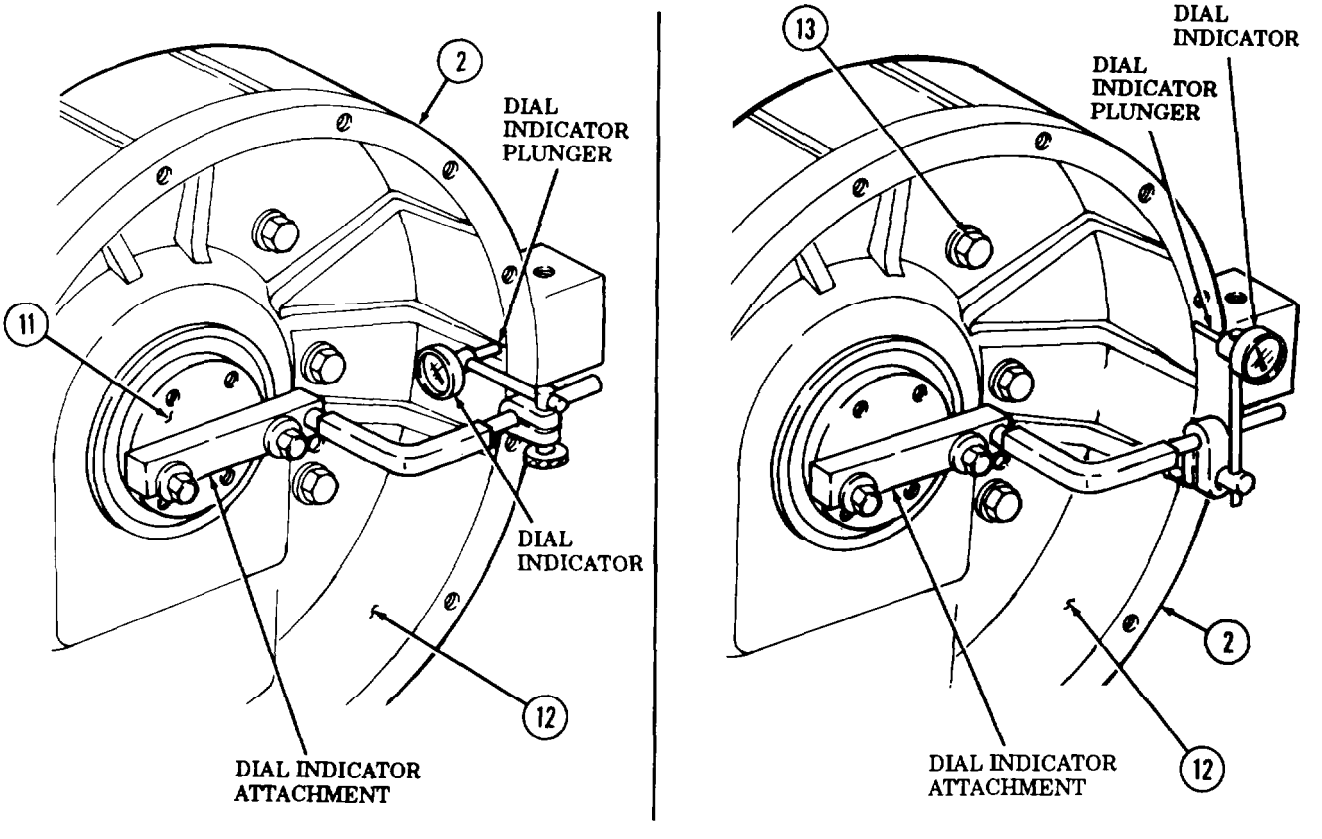

3-22. FLYWHEEL HOUSING MAINTENANCE (Contd)

NOTE

The highest reading recorded will indicate the direction the flywheel housing must be moved to obtain correct alinement center.

9. Set dial indicator to zero. Rotate crankshaft flange (2) on flywheel housing (4) so dial indicator is positioned at 12 o'clock and check reading at 3, 6, 9, and 12 o'clock positions.
10. Rotate crankshaft flange (2) on flywheel housing (4) and set dial indicator at point where highest reading was recorded on flywheel housing bore (3).
11. Set dial indicator to read one-half of total highest reading.
12. Loosen nine screws (1) slightly on flywheel housing (4). Tap flywheel housing (4), using soft-head hammer, opposite the dial indicator until it reads zero. Tighten screws (1) 140-160 lb-ft (190-217 N•m) in sequence shown.
13. Reposition and set dial indicator against flywheel housing face (5). Push crankshaft flange (2) forward to take up end play.
14. Set dial indicator to zero. Rotate crankshaft flange (2) and read total runout on dial indicator. Measurement will not exceed 0.008 in. (0.20 mm).
15. Remove dial indicator and dial indicator attachment from flywheel housing (4).

NOTE

Perform steps 16 and 17 if dowel pins were removed.

16. Ream dowel pin holes (7) to next oversize, using drill and reaming fixture.
17. Install two new dowel pins (8) in flywheel housing (4) and engine block (6). Ensure dowel pins (8) are even with or 0.010 in. (0.25 mm) below the flywheel housing (4).

3-22. FLYWHEEL HOUSING MAINTENANCE (Contd)

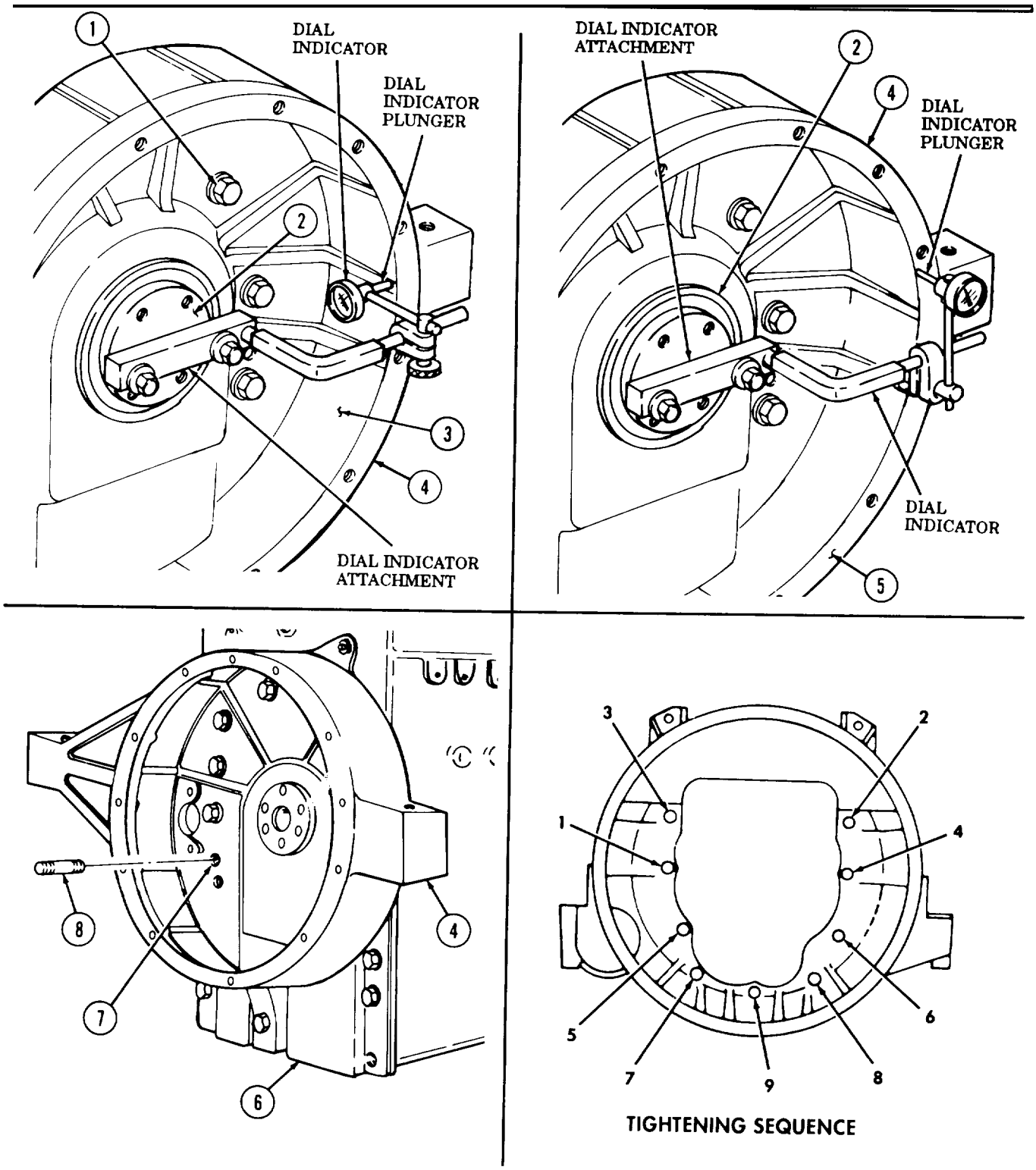

FOLLOW-ON TASK: Install flywheel and gear (para. 3-21).

Section III. ENGINE REPLACEMENT

3-23. ENGINE REPLACEMENT INDEX

PARA. NO.	TITLE	PAGE NO.
3-24.	Engine and Transmission Replacement	3-76
3-25.	Engine and Container Replacement	3-97
3-26.	Preparing Replacement Engine for Installation	3-101
3-27.	Starting Repaired or Replaced Engine	3-104

3-24. ENGINE AND TRANSMISSION REPLACEMENT

THIS TASK COVERS:

a. Preliminary Disconnections
b. Removal
c. Installation

INITIAL SETUP

APPLICABLE MODELS
All

TOOLS
General mechanic's tool kit (Appendix B, Item 1)
Torque wrench, 3/4-in. dr. (Appendix B, Item 2)
Torque wrench, 3/8-in. dr. (Appendix B, Item 4)
Sling (Appendix B, Item 142)
Breaker bar (Appendix B, Item 139)
Lifting device

MATERIALS/PARTS
Twenty-two lockwashers (M816, M819) (Appendix D, Item 217)
Twenty lockwashers (all except M816, M819) (Appendix D, Item 217)
Two screw-assembled lockwashers (Appendix D, Item 392)
Adapter packing (Appendix D, Item 305)
Cap and plug set (Appendix C, Item 6)
Adhesive sealant (Appendix C, Item 43)
Antiseize tape (Appendix C, Item 50)

PERSONNEL REQUIRED
Two

REFERENCES (TM)
LO 9-2320-260-12
TM 9-2320-260-10
TM 9-2320-260-20
TM 9-2320-260-34P-1

EQUIPMENT CONDITION
- Hood removed (TM 9-2320-260-20).
- Battery ground cables disconnected (TM 9-2320-260-20).
- Lever wind removed (TM 9-2320-260-20).
- Brush guard and stone guard removed (TM 9-2320-260-20).
- Air cleaner removed (TM 9-2320-260-20).
- Right and left side panels removed (TM 9-2320-260-20).
- Exhaust muffler removed (TM 9-2320-260-20).
- Gearshift lever removed (TM 9-2320-260-20).
- Cab tunnel, rear tunnel, and toeboard removed (TM 9-2320-260-20).
- Coolant system drained (TM 9-2320-260-20).
- Engine oil drained (LO 9-2320-260-12).
- Transmission oil drained (LO 9-2320-260-12).
- Air reservoir draincocks opened (TM 9-2320-260-20).
- Engine oil dipstick and tube removed (TM 9-2320-260-20).
- Surge tank removed (TM 9-2320-260-20).
- Transmission PTO to hydraulic pump driveshaft removed (if so equipped) (TM 9-2320-260-20).
- Transmission-to-transfer case propeller shaft removed (TM 9-2320-260-20).
- Fuel burning personnel heater removed (if so equipped) (TM 9-2320-260-20).
- Personnel hot water heater removed (if so equipped) (TM 9-2320-260-20).

3-24. ENGINE AND TRANSMISSION REPLACEMENT (Contd)

GENERAL SAFETY INSTRUCTIONS

- All personnel must stand clear during lifting operations.
- Use tanker or breaker bar to free engine during lifting operations.
- Do not detach chain from engine until all engine weight is evenly distributed and engine is stable on transport stand.

GENERAL SAFETY INSTRUCTIONS (Contd)

- Diesel fuel is flammable. Do not perform this task near open flame.
- Do not disconnect air lines before draining air reservoirs.
- Lifting device must have a weight capacity greater than the engine and transmission.

a. Preliminary Disconnections

CAUTION

Do not operate alternator with output terminal (POS) disconnected or damage to alternator will result.

NOTE

Tag all wires for installation.

1. Remove two screws (2) and lockwashers (3) from terminal cover (1) and alternator (4). Discard lockwashers (3).
2. Pry terminal cover (1) away from adhesive sealant and remove sealant from alternator (4).
3. Remove two screws (11), lockwashers (10), retaining strap (12), and spacer plate (13) from positive wire (14), lead (5), and alternator (4). Discard lockwashers (10).
4. Remove screw (9), lockwasher (8), and ground wire (7) from alternator (4). Discard lockwasher (8).
5. Disconnect lead (5) from wire (6).
6. Remove nut (16), lockwasher (15), and positive wire (14) from alternator (4). Discard lockwasher (15).

NOTE

Perform step 7 for late model vehicles.

7. Loosen two clamps (17) and remove breather tube (20) from breather (18) and elbow (19).

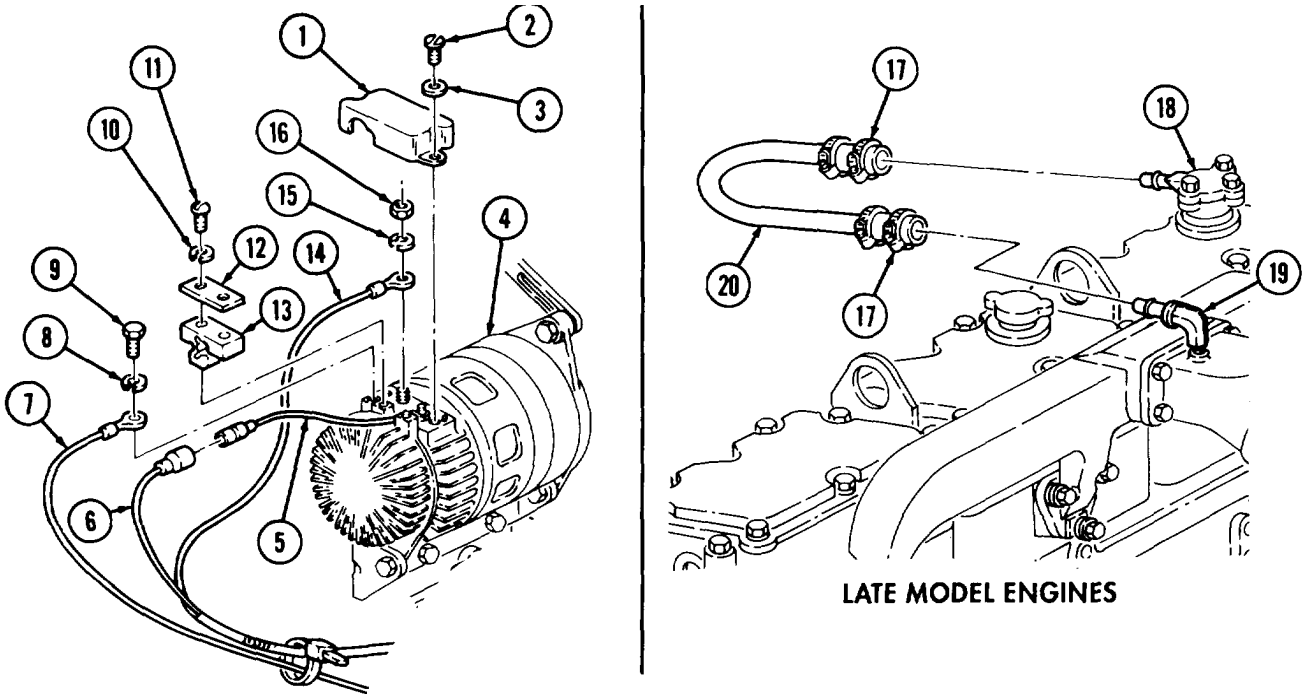

3-24. ENGINE AND TRANSMISSION REPLACEMENT (Contd)

CAUTION

Cap or plug all openings immediately after disconnecting lines and hoses to prevent contamination. Remove cap or plugs prior to installation. Failure to do so may result in damage to equipment.

NOTE

- Tag all hydraulic lines for installation.
- Have drainage container ready to catch hydraulic fluid.

8. Remove clamp (2) and return hose (3) from pump elbow (1).
9. Disconnect pressure hose (4) from adapter (5) on power steering pump (7).
10. Remove adapter (5) and packing (6) from power steering pump (7). Discard packing (6).

NOTE

Perform step 11 if vehicle is equipped with personnel heater kit.

11. Loosen clamps (9) and (12) and remove hoses (8) and (13) from valves (10) and (11).

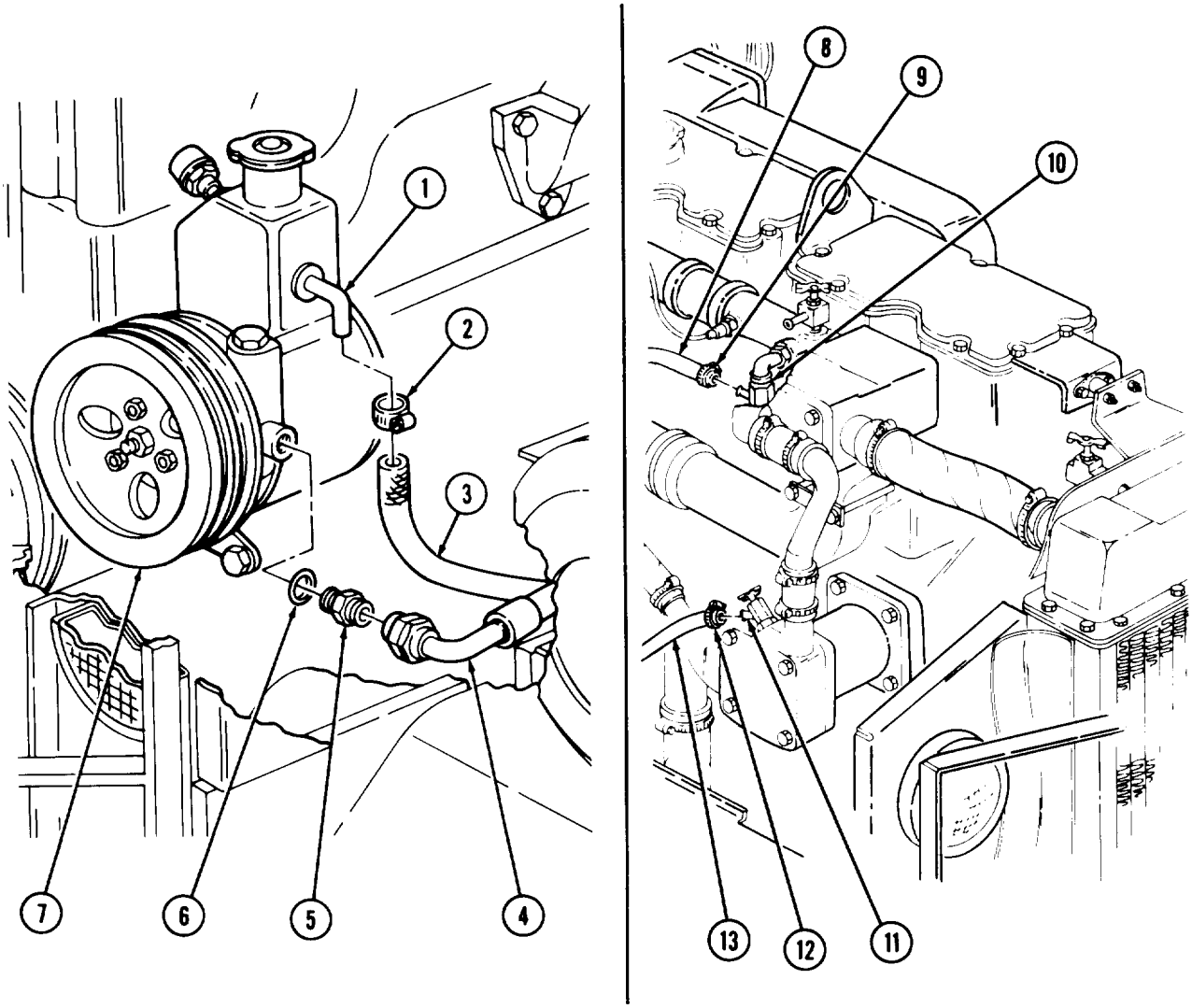

3-24. ENGINE AND TRANSMISSION REPLACEMENT (Contd)

NOTE

- Tag oil pressure hose for installation.
- Have drainage container ready to catch oil.

12. Disconnect oil pressure hose (14) from elbow (15). Allow oil to drain from oil pressure hose (14).
13. Remove screw (16), lockwasher (17), washer (18), clamp (20), and oil pressure hose (14) from rocker level housing cover (19). Discard lockwasher (17).

WARNING

Drain air reservoirs before disconnecting air lines. Small parts under pressure may shoot out with high velocity, causing injury to personnel.

NOTE

Tag air outlet tubes for installation.

14. Remove air governor tube (22) from elbow (23) of air governor (21).

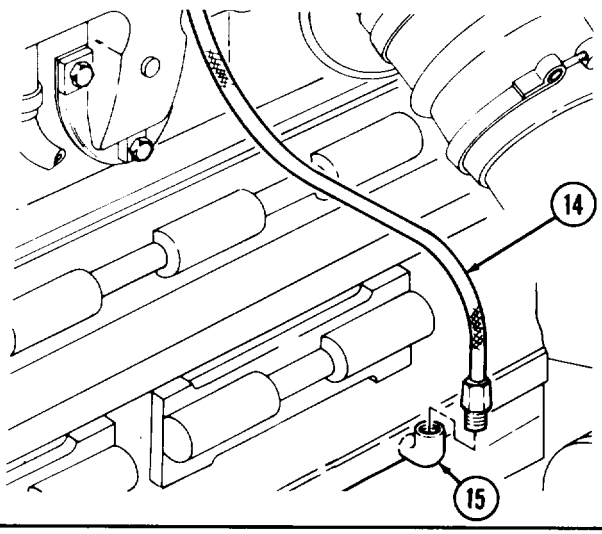

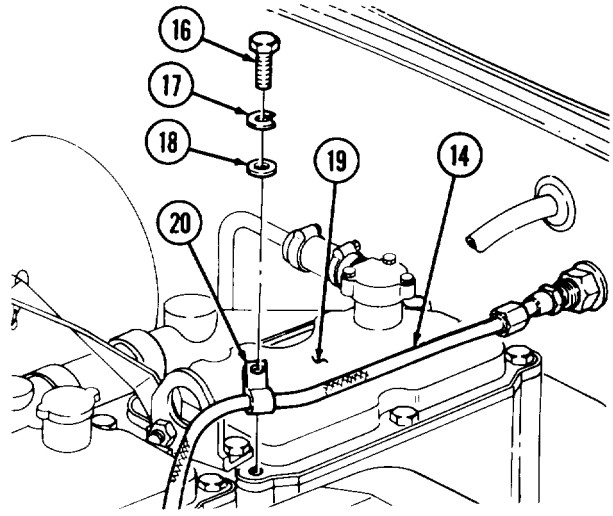

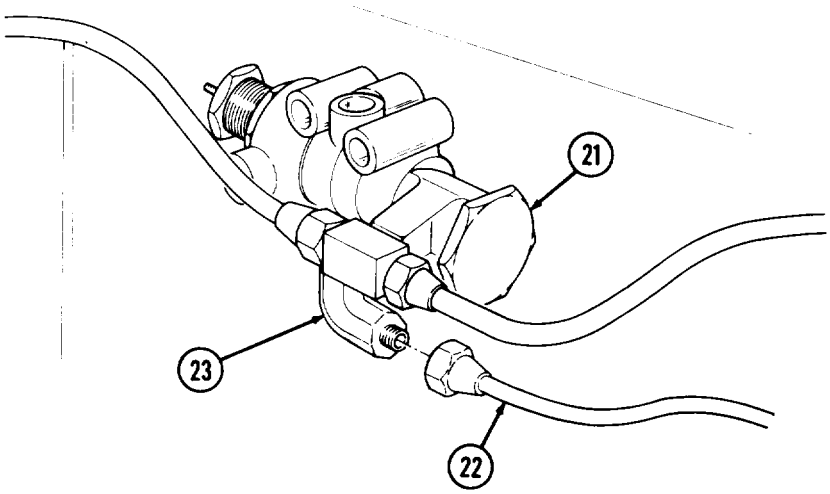

3-24. ENGINE AND TRANSMISSION REPLACEMENT (Contd)

15. Remove air governor tube (2) from elbow (1).
16. Remove air outlet tube (5) from elbow (3).

WARNING

Diesel fuel is flammable. Do not perform fuel system procedures near open flame. Injury to personnel may result.

NOTE

Tag cables, wires, lines, and parts for installation.

17. Remove tachometer driveshaft cable (4) from fuel pump (23).
18. Remove nut (12) and emergency shutdown control wire (11) from emergency shutdown valve (13).
19. Remove clamp (6) and cable (10) from fuel shutoff lever (7).
20. Remove fuel line (9) from fuel return line tee fitting (8).
21. Remove primer pump fuel line (16) from fuel pump (23).
22. Remove fuel inlet line (15) from inlet adapter elbow (14).
23. Remove nut (19), screw (18), and accelerator rod clevis (17) from accelerator lever (20).
24. Remove spring (21) from accelerator lever (20) and oil pump (22).

NOTE

Perform step 25 for M816 and M819 vehicles.

25. Remove two screws (28), lockwashers (29), and air cylinder bracket (30) from VS governor (27) Discard lockwashers (29).
26. Pull spring-loaded pin (24) to one side of clevis (25) and remove clevis (25) from remote control lever (26).

3-24. ENGINE AND TRANSMISSION REPLACEMENT (Contd)

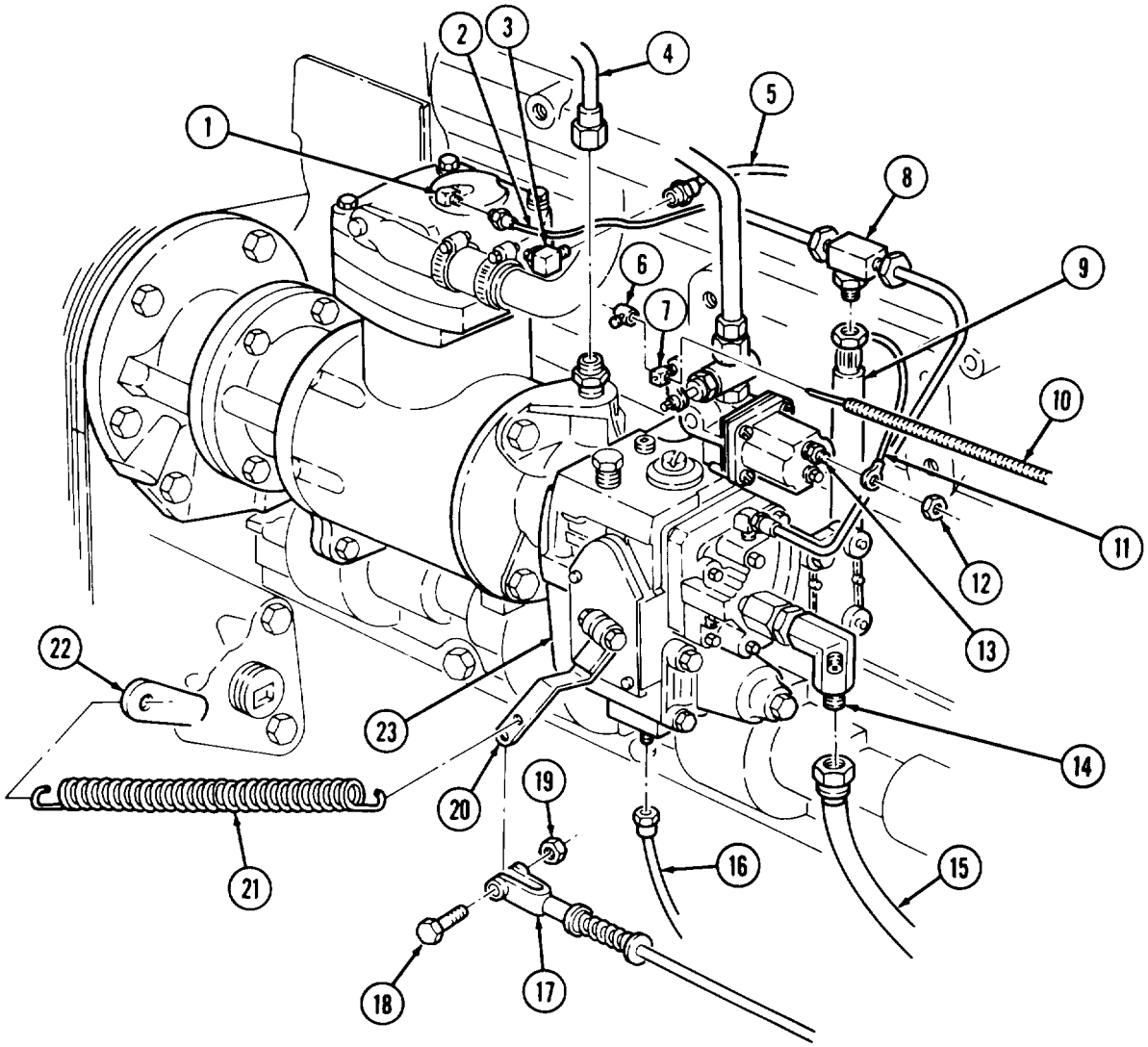

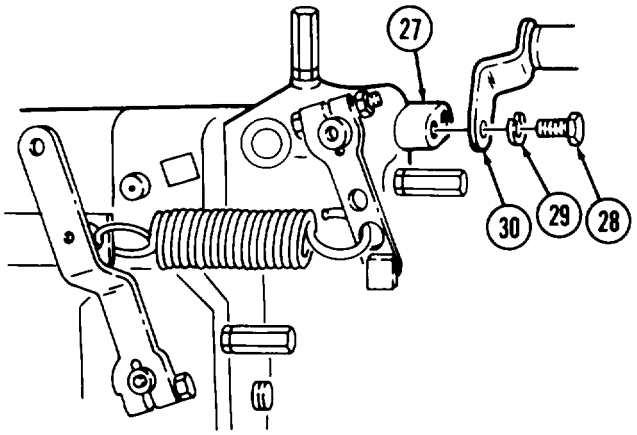

M816, M819 VEHICLES

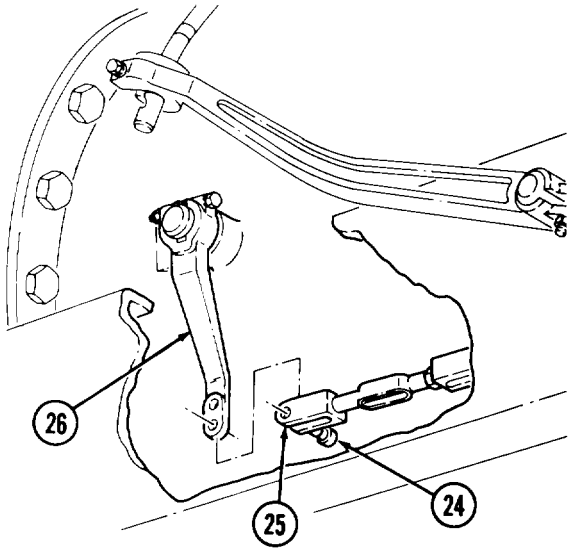

3-24. ENGINE AND TRANSMISSION REPLACEMENT (Contd)

NOTE

Tag all wires for installation.

27. Remove screw (6), clip (7), and wire (5) from starter solenoid (4).
28. Remove nut (1), lockwasher (2), and wires (3) and (14) from starter solenoid (4). Discard lockwasher (2).
29. Remove nut (11), lockwasher (12), wire (13), ground wire (10), and ground strap (9) from starter motor (8). Discard lockwasher (12).

NOTE

Cam follower housing is mounted with screw-assembled lockwashers on late model engines.

30. Remove screw-assembled lockwasher (17), bracket (16), and control cable (18) from cam follower housing (15). Discard screw-assembled lockwasher (17).
31. Remove screw-assembled lockwasher (21), clamp (20), and harnesses (19) from cam follower housing (22). Discard screw-assembled lockwasher (21).

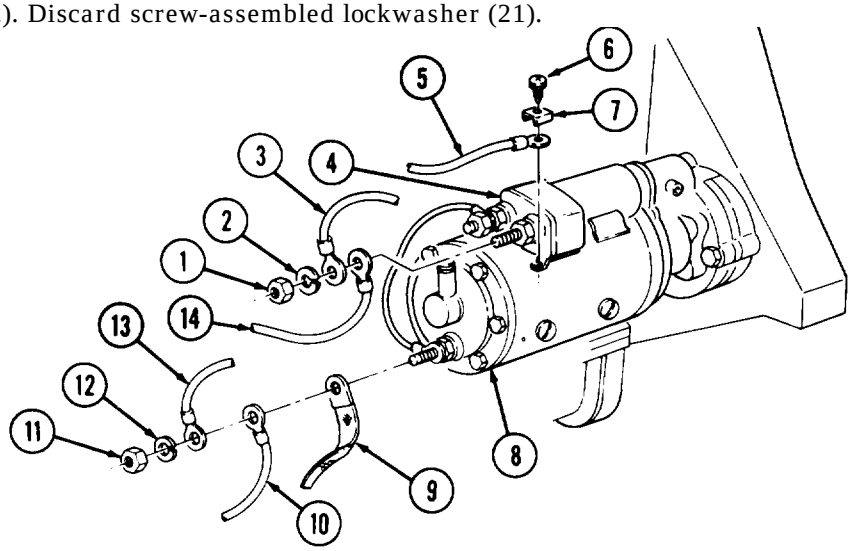

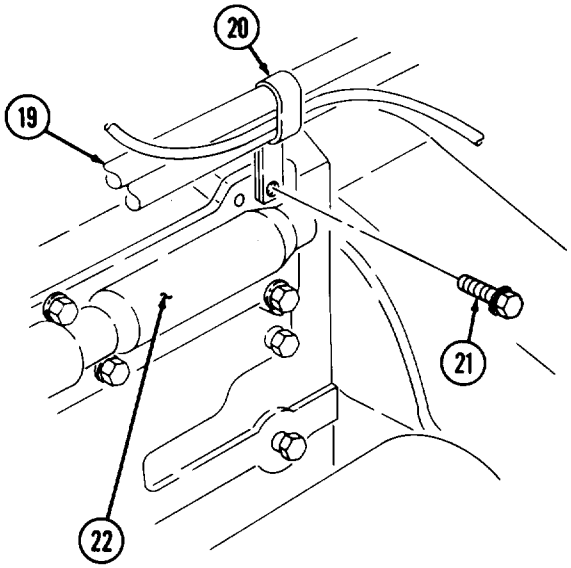

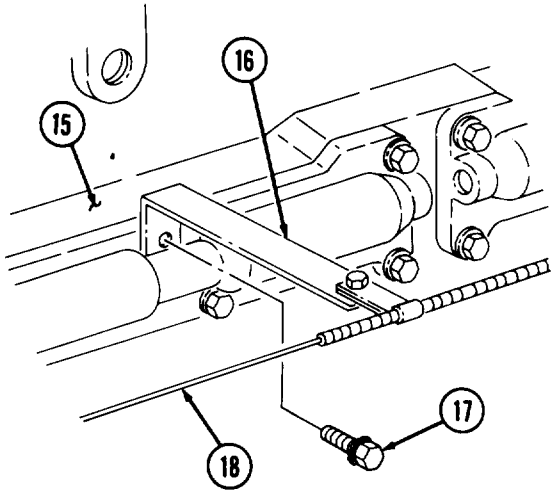

3-24. ENGINE AND TRANSMISSION REPLACEMENT (Contd)

WARNING

Drain air reservoirs before disconnecting air lines. Small parts under pressure may shoot out with high velocity, causing injury to personnel.

NOTE

- Engine intake manifold is mounted with screw-assembled lockwashers on late model engines.
- Tag all parts for installation.

32. Remove three screws (26), lockwashers (25), washers (24), and clamps (23) from engine intake manifold (29). Discard lockwashers (25).
33. Remove tube (27) from elbow (28).

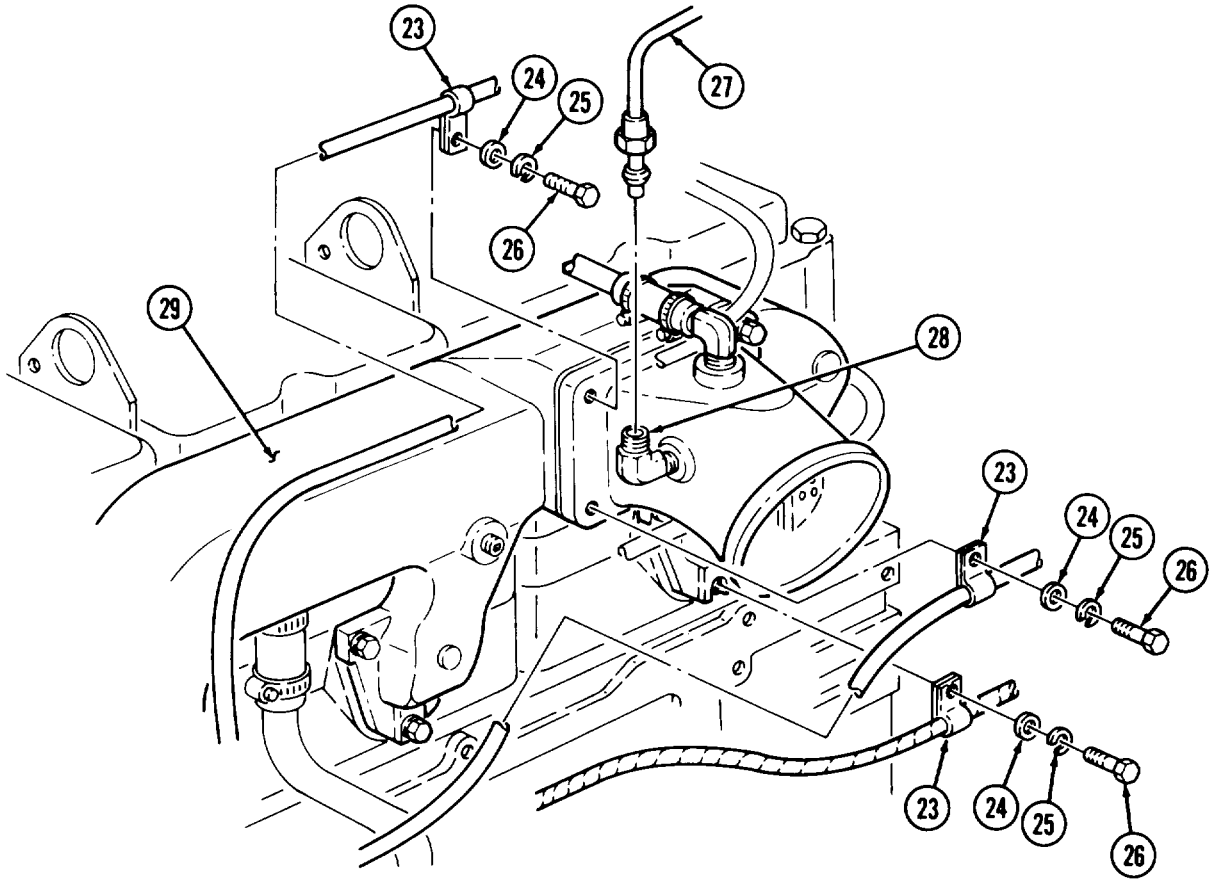

3-24. ENGINE AND TRANSMISSION REPLACEMENT (Contd)

34. Remove screws (20) and (21), washer (22), lockwasher (19), and two clamps (23) from transmission (12). Discard lockwasher (19).

WARNING

Drain air reservoirs before disconnecting air lines. Small parts under pressure may shoot out with high velocity, causing injury to personnel.

NOTE

Tag air lines for installation.

35. Remove air lines (18) and (15) from two elbows (5).
36. Remove screw (4) and air line bracket (14) from transmission (12).
37. Remove nut (13), screw (1), and air line clamps (2) and (3) from air line bracket (14).
38. Remove air line (15) from air line (17).
39. Remove air line (18) from air line (16).
40. Remove air line (9) from elbows (8) and (10).
41. Remove elbow (10) from air line (11).

NOTE

Perform step 42 for M816 vehicles.

42. Remove air line (7) from rotochamber (6).

3-24. ENGINE AND TRANSMISSION REPLACEMENT (Contd)

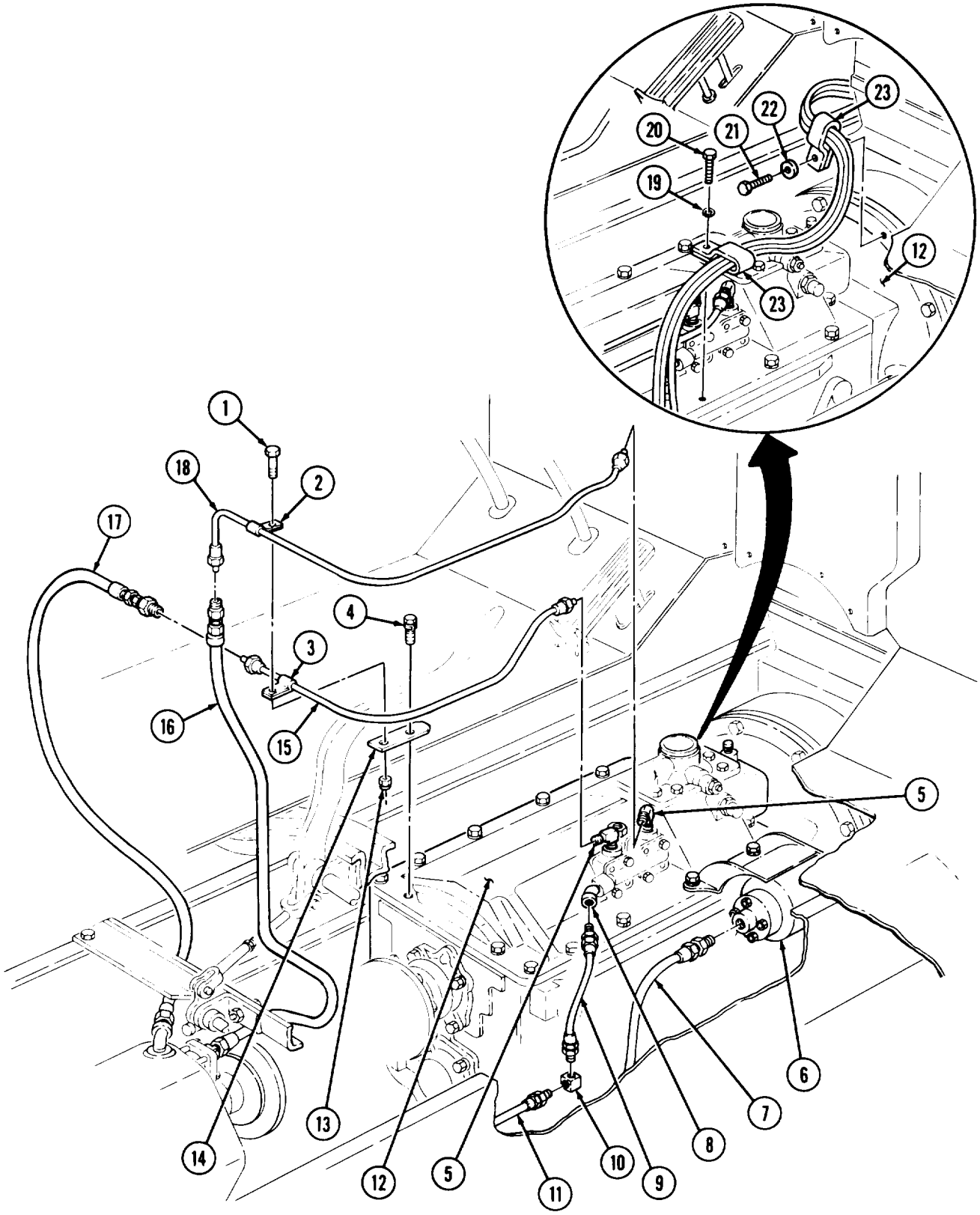

3-24. ENGINE AND TRANSMISSION REPLACEMENT (Contd)

b. Removal

1. Attach sling to engine lifting brackets (1) and lifting device.
2. Raise lifting device until slack is removed from sling.
3. Remove five screws (10) and lockwashers (11) from front crossmember (12) and engine mount (13). Discard lockwashers (11).
4. Remove two screws (3), washers (4), lockwashers (8), and nuts (9) from engine flywheel housing(5) and rear engine supports (7). Discard lockwashers (8).

WARNING

- All personnel must stand clear during lifting operations. A swinging or shifting load may cause injury to personnel.
- Use tanker or breaker bar to free engine during lifting operations. Failure to do so may result in injury to personnel.
- Lifting device must have a weight capacity greater than 5000 lbs (2270 kg). Failure to do so may cause injury to personnel and/or damage to equipment.
- Do not detach sling from engine until all engine weight is evenly distributed and engine is stable on support stand.

CAUTION

Always remove engine and transmission slowly. Lift in short lifts and closely observe all engine and transmission attachments during removal to prevent damage to equipment.

NOTE

- During steps 5 and 7, if engine is removed in the field, an additional assistant will be needed to operate the wrecker crane.
- Sling must be adjusted so that transmission points downward at approximately a 15° to 20° angle for engine to clear front axle.

5. Using socket wrench on adjustable hoist chain ratchet (14), adjust engine angle to 15° to 20°.
6. Lift engine (2) and transmission (6) slowly upward until clear of engine compartment and vehicle.
7. Using socket wrench on adjustable hoist chain ratchet (14), level engine angle.
8. Lower engine (2) and transmission (6) on supports.
9. Remove sling and lifting device from engine lifting brackets (1).

NOTE

- For removal and installation of transmission, refer to para. 8-5.
- For preparation of replacement engine for installation, refer to para. 3-26.

3-24. ENGINE AND TRANSMISSION REPLACEMENT (Contd)

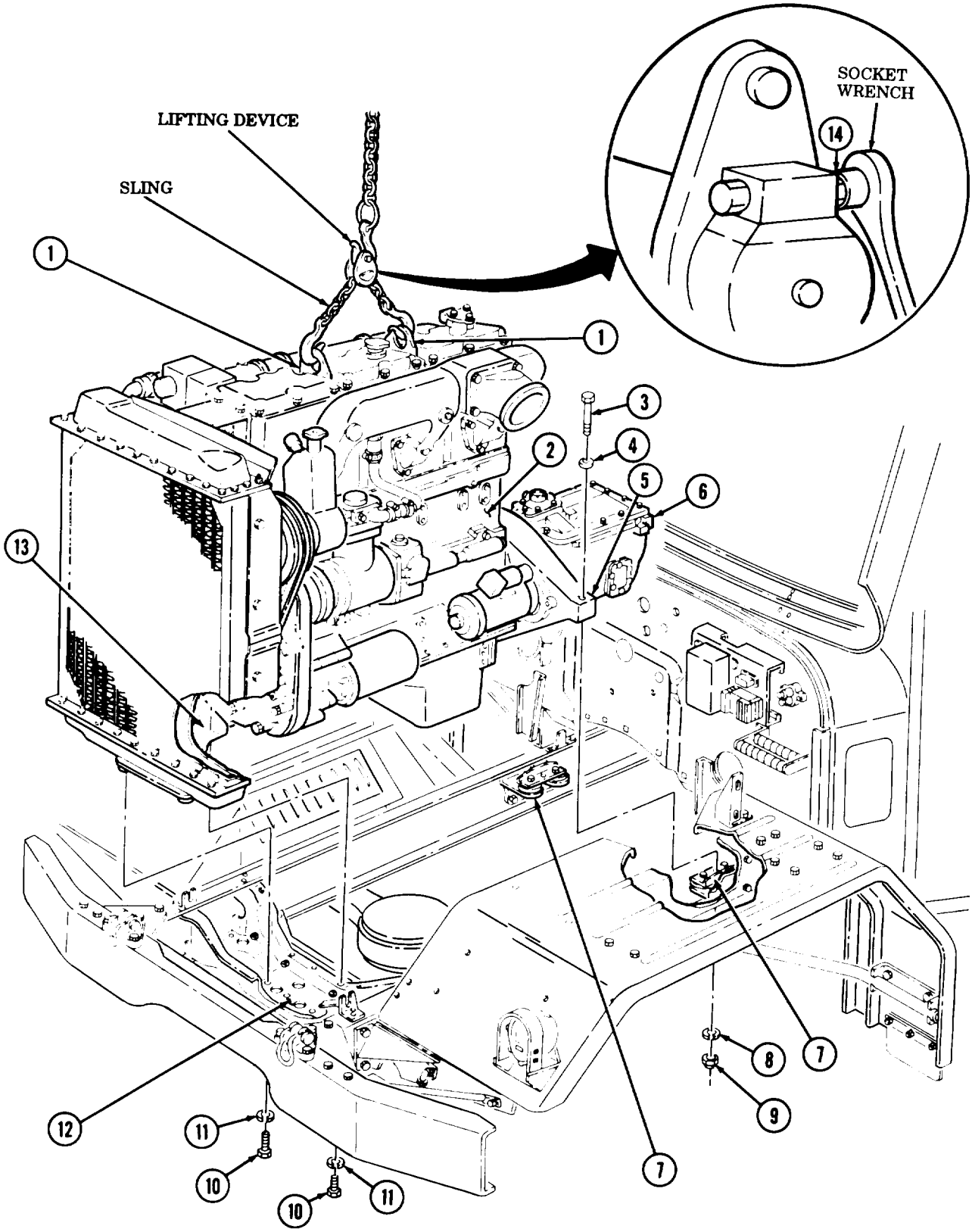

3-24. ENGINE AND TRANSMISSION REPLACEMENT (Contd)

c. Installation

WARNING

- All personnel must stand clear during lifting operations. A stinging or shifting load may cause injury to personnel.
- Lifting device must have a weight capacity greater than 5000 lbs (2270 kg). Failure to do so may result in injury to personnel and/or damage to equipment.

1. Attach sling to engine lifting brackets (1) and lifting device.
2. Raise lifting device until slack is removed from sling.

CAUTION

Lower engine into chassis carefully and closely observe all engine and transmission components to prevent damage to equipment.

NOTE

- During steps 3 through 5, if engine is removed in the field, an additional assistant will be needed to operate the wrecker crane.
- Chain must be adjusted so that transmission points downward at approximately a 15° to 20° angle for engine to clear front axle.

3. Place engine (2) and transmission (6) directly above engine compartment.
4. Using socket wrench on adjustable hoist chain ratchet (14), adjust engine angle to 15° to 20°.
5. Slowly lower engine (2) and transmission (6) into engine compartment until engine mount (13) is resting on front crossmember (12) and engine flywheel housing (5) is resting on rear engine supports (7), with all holes alined.
6. Install engine flywheel housing (5) on rear engine supports (7) with two screws (3), washers (4), new lockwashers (8), and nuts (9). Tighten screws (3) 140-160 lb-ft (190-217 N•m).
7. Install engine mount (13) on front crossmember (12) with five screws (10) and new lockwashers (11). Tighten screws (10) 65-75 lb-ft (88-102 N•m).
8. Remove lifting device and sling from two engine lifting brackets (1).

3-24. ENGINE AND TRANSMISSION REPLACEMENT (Contd)

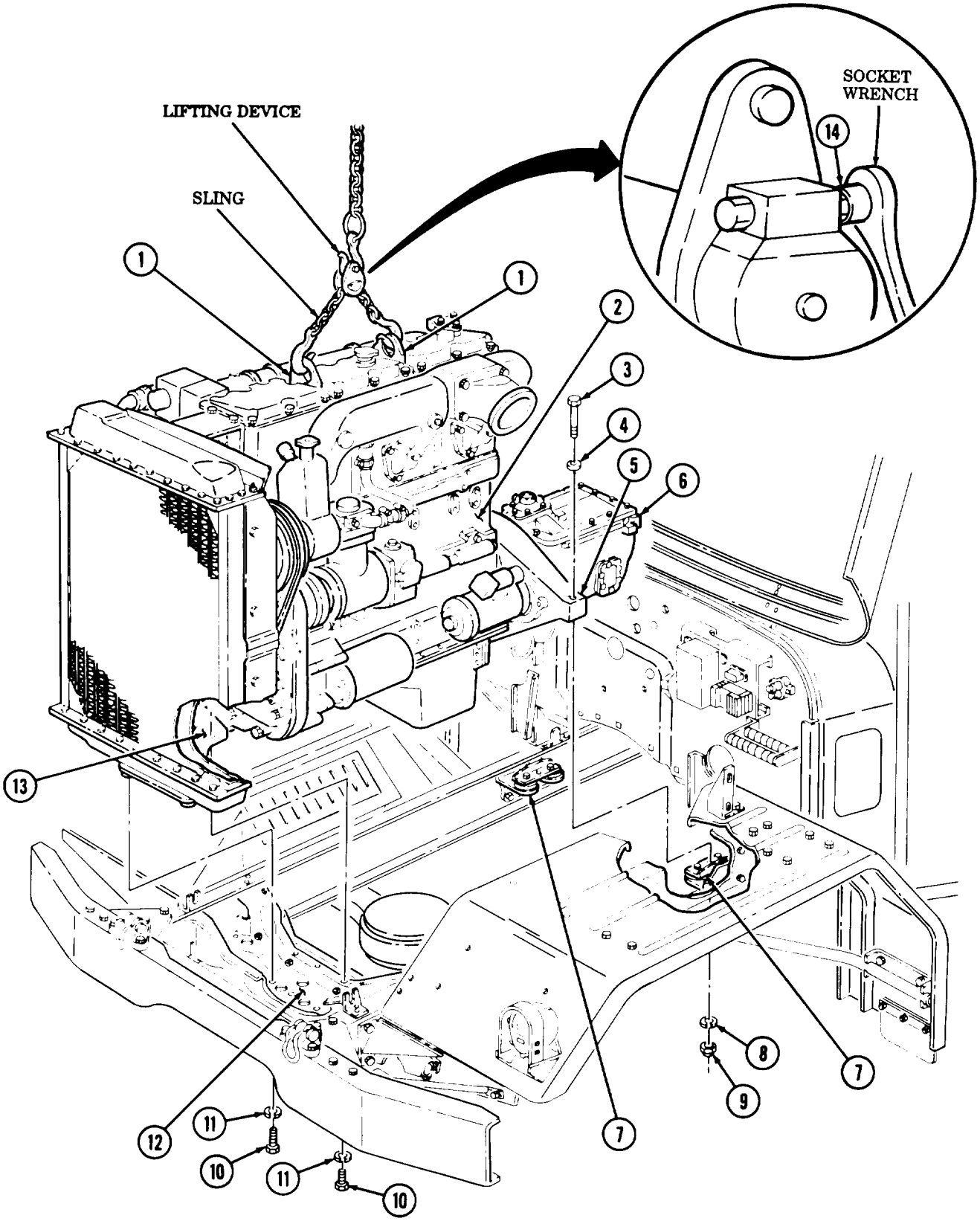

3-24. ENGINE AND TRANSMISSION REPLACEMENT (Contd)

9. Install tube (5) on elbow (6).
10. Install three clamps (1) on engine intake manifold (7) with three washers (2), new lockwashers (3), and screws (4). Tighten screws (5) 25-30 lb-ft (34-41 N•m).
11. Install clamp (9) on cam follower housing (8) with new screw-assembled lockwasher (10). Tighten screw-assembled lockwasher (10) 30-35 lb-ft (41-48 N•m.
12. Install bracket (11) on cam follower housing (12) with new screw-assembled lockwasher (13). Tighten screw-assembled lockwasher (13) 30-35 lb-ft (41-48 N•m).
13. Install ground strap (23), ground wire (24), and wire (27) on starter motor (22) with new lockwasher (26) and nut (25).
14. Install wires (14) and (17) on starter solenoid (18) with new lockwasher (16) and nut (15).
15. Install wire (19) and clip (21) on starter solenoid (18) with screw (20).

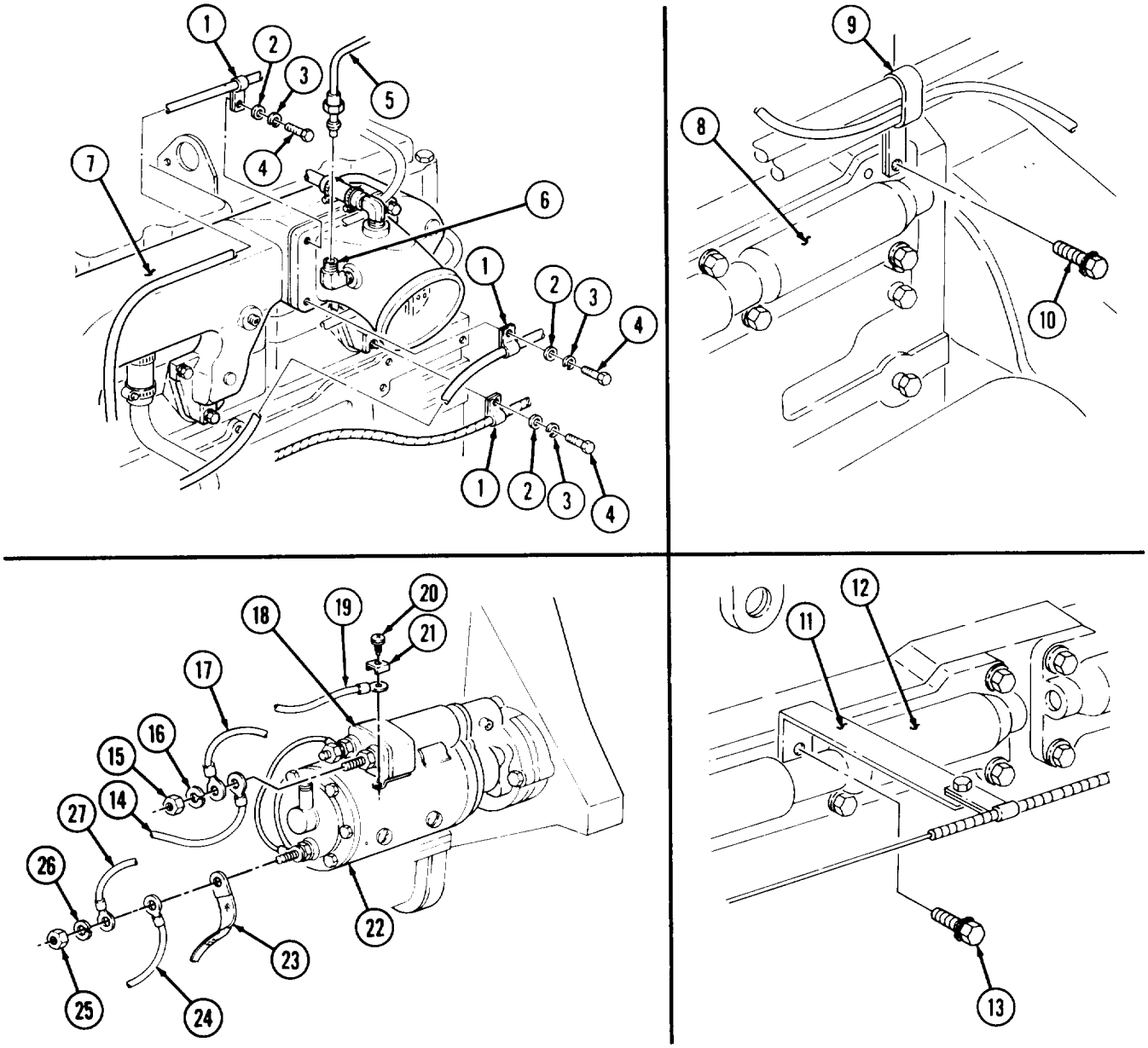

3-24. ENGINE AND TRANSMISSION REPLACEMENT (Contd)

NOTE

- Wrap air line fittings with antiseize tape.
- Perform step 16 for M816 vehicles.

16. Install air line (38) on rotochamber (37).
17. Install elbow (40) on air line (41).
18. Install air line (39) on elbows (40) and (42).
19. Install air line (28) on air line (34).
20. Install air line (45) on air line (35).
21. Install air line clamps (31) and (30) on air line bracket (33) with screw (29) and nut (44).
22. Install air line bracket (33) on transmission (43) with screw (32).
23. Install air lines (35) and (34) on two elbows (36).
24. Install two clamps (48) on transmission (43) with washer (47), new lockwasher (49), and two screws (46).

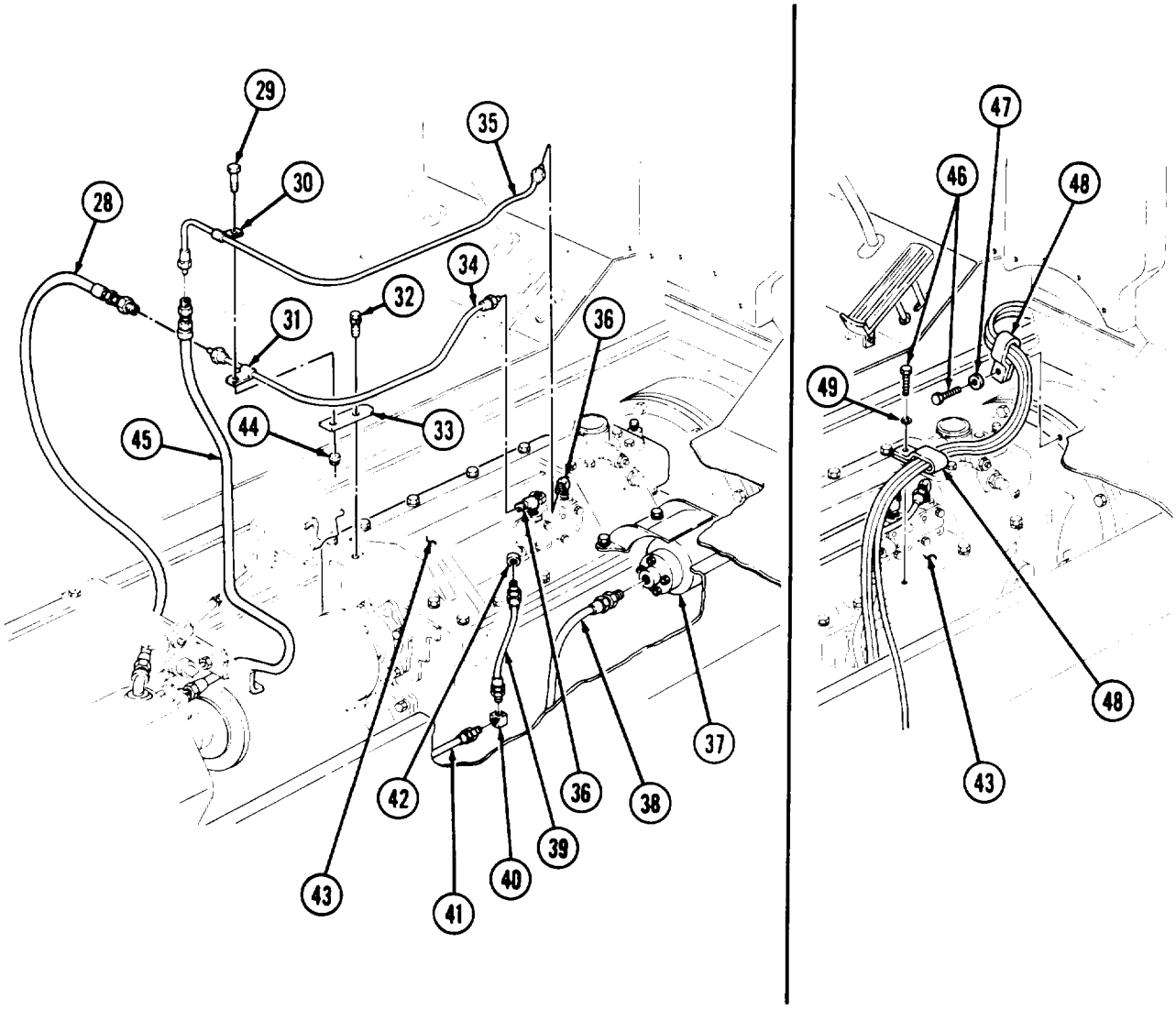

3-24. ENGINE AND TRANSMISSION REPLACEMENT (Contd)

25. Install clevis (3) on remove control lever (1) with spring-loaded pin (2).

NOTE

Perform step 26 for M816 and M819 vehicles.

26. Install air cylinder bracket (7) on VS governor (4) with two new lockwashers (6) and screws (5).
27. Install spring (29) on accelerator lever (26) and oil pump (30).
28. Install accelerator rod clevis (25) on accelerator lever (26) with nut (27) and screw (24).
29. Install fuel inlet line (22) on inlet adapter elbow (21).
30. Install primer pump fuel line (23) on fuel pump (28).
31. Install fuel line (16) on fuel return line tee fitting (15).
32. Install cable (17) on fuel shutoff lever (14) with clamp (13).
33. Install emergency shutdown control wire (18) on emergency shutdown valve (20) with nut (19).
34. Install tachometer driveshaft cable (11) on fuel pump (28).
35. Install air outlet tube (12) on elbow (10).
36. Install air governor tube (9) on elbow (8).

3-24. ENGINE AND TRANSMISSION REPLACEMENT (Contd)

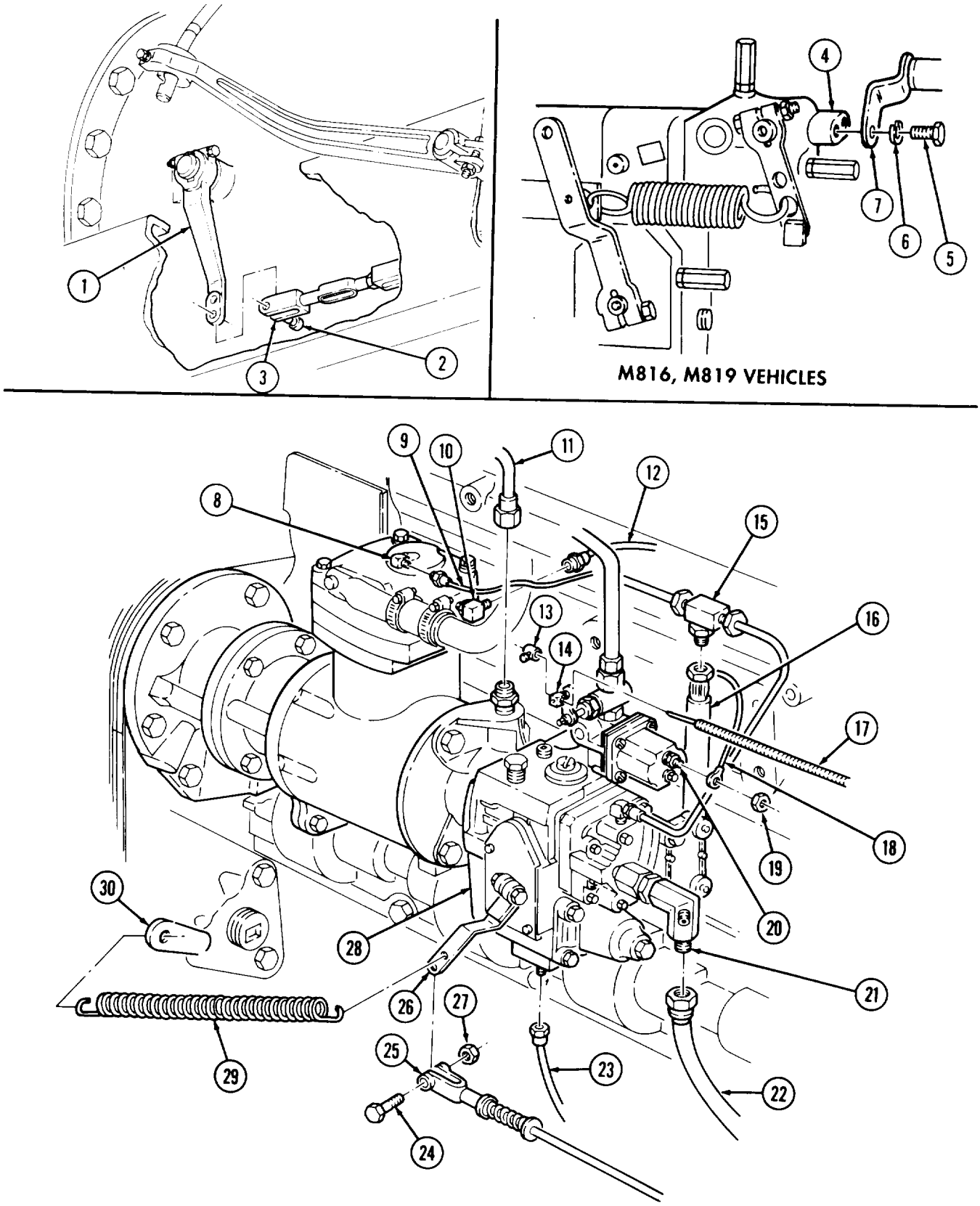

3-24. ENGINE AND TRANSMISSION REPLACEMENT (Contd)

37. Install air governor tube (2) on elbow (3) of air governor (1).
38. Install oil pressure hose (4) on elbow (5).
39. Install clamp (7) and oil pressure hose (4) on rocker lever housing cover (6) with washer (8), new lockwasher (9), and screw (10). Tighten screw (10) 10-15 lb-ft (14-20 N•m).
40. Install new packing (17) and adapter (16) on power steering pump (11).
41. Connect pressure hose (15) to adapter (16).
42. Install return hose (14) on pump elbow (12) with clamp (13).

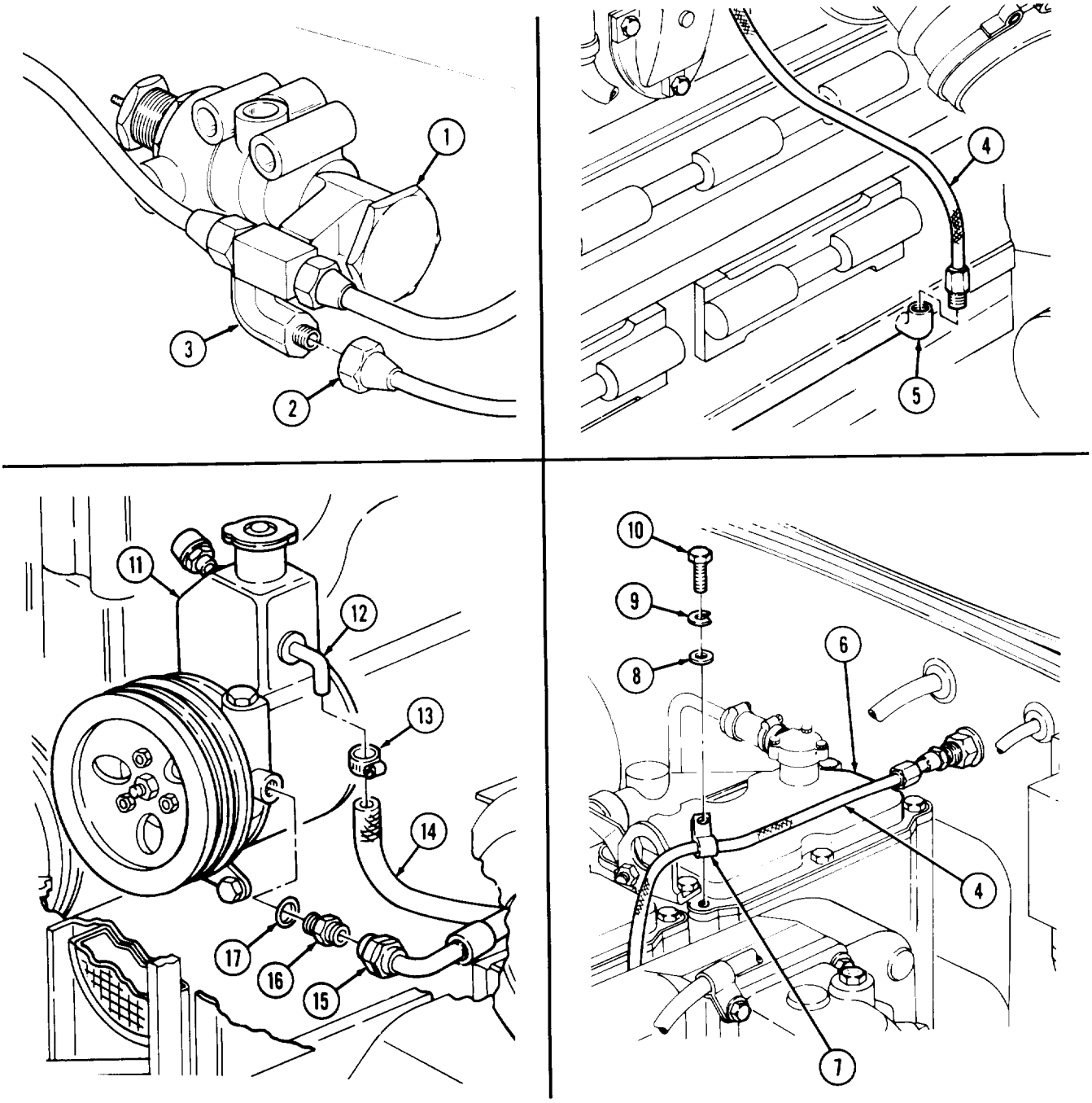

3-24. ENGINE AND TRANSMISSION REPLACEMENT (Contd)

NOTE

- Perform step 43 for late model engines.
- Ensure terminals are clean before making connections.

43. Install breather tube (18) on breather (20) and elbow (21). Tighten two clamps (19).
44. Install positive wire (35) on alternator (25) with new lockwasher (36) and nut (37).
45. Connect lead (26) to wire (27).
46. Install ground wire (28) on alternator (25) with new lockwasher (29) and screw (30).
47. Insert positive wire (35) and lead (26) in spacer plate (31) and install on alternator (25) with retaining strap (32), two new lockwashers (33), and screws (34).
48. Completely seal positive wire (35), lead (26), and inside of terminal cover (22) with adhesive sealant.
49. Install terminal cover (22) on alternator (25) with two new lockwashers (24) and screws (23).

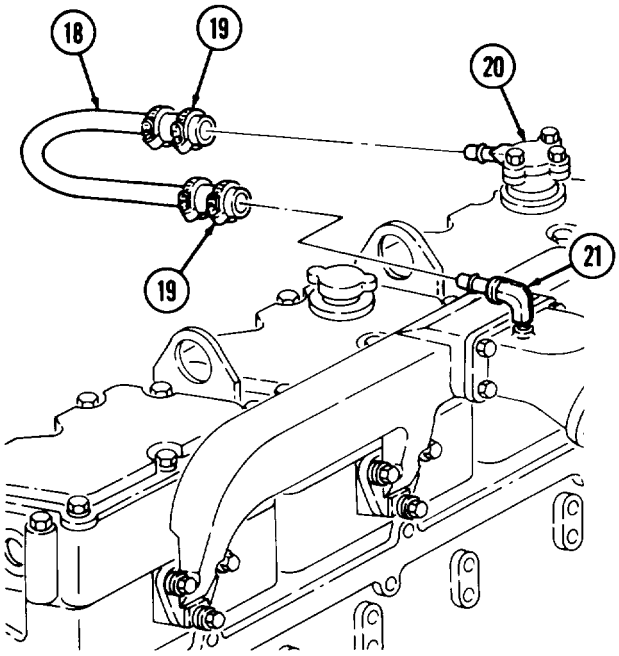

LATE MODEL ENGINES

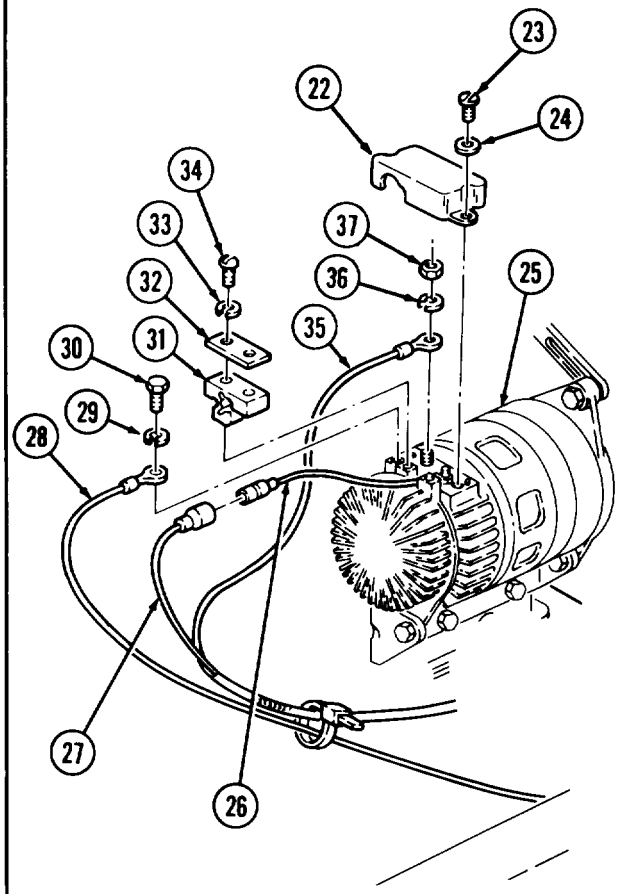

3-24. ENGINE AND TRANSMISSION REPLACEMENT (Contd)

FOLLOW-ON TASKS:
- Install transmission-to-transfer case propeller shaft (TM 9-2320-260-20).
- Install transmission PTO to hydraulic pump driveshaft (if removed) (TM 9-2320-260-20).
- Install cab tunnel, rear tunnel, and toeboard (TM 9-2320-260-20).
- Install gearshift lever (TM 9-2320-260-20).
- Install surge tank (TM 9-2320-260-20).
- Install engine oil dipstick and tube (TM 9-2320-260-20).
- Install exhaust muffler (TM 9-2320-260-20).
- Install right and left side panels (TM 9-2320-260-20).
- Install air cleaner (TM 9-2320-260-20).
- Install brush guard and stone guard (TM 9-2320-260-20).
- Install lever wind (TM 9-2320-260-20).
- Install hood (TM 9-2320-260-20).
- Install fuel burning personnel heater (if removed) (TM 9-2320-260-20).
- Install personnel hot water heater (if removed) (TM 9-2320-260-20).
- Fill coolant system (TM 9-2320-260-20).
- Fill transmission oil (LO 9-2320-260- 12).
- Fill engine oil (LO 9-2320-260-12).
- Close air reservoir draincocks (TM 9-2320-260-20).
- Connect battery ground cables (TM 9-2320-260-20).
- Adjust accelerator linkage (TM 9-2320-260-20).
- Adjust clutch linkage (TM 9-2320-260-20).

CAUTION

Never start a new or repaired engine without performing run-in starting procedures provided in para. 3-27.

- Perform engine run-in starting procedures (para. 3-27).
- Start engine (TM 9-2320-260-10), allow air pressure to build up to normal operating range, and check for leaks. Road test vehicle.

3-25. ENGINE AND CONTAINER REPLACEMENT

THIS TASK COVERS:

a. Removal **b. Installation**

INITIAL SETUP

APPLICABLE MODELS
All

TOOLS
General mechanic's tool kit
(Appendix B, Item 1)
Chain
Lifting device
Torque wrench, 3/8-in. dr.
(Appendix B, Item 4)

MATERIALS/PARTS
Forty-four lockwashers
(Appendix D, Item 215)

PERSONNEL REQUIRED
Two

REFERENCES (TM)
TM 9-2320-260-34P-1

GENERAL SAFETY INSTRUCTIONS
- Engine container pressure must be released before opening container.
- All personnel must stand clear during lifting operations.
- Lifting device must have a weight capacity greater than engine.

WARNING

Engine container is pressurized. Ensure pressure is released before opening container. Failure to do so may result in injury to personnel.

a. Removal

1. Remove forty-two nuts (2), lockwashers (3), screws (4), and upper container section (1) from lower container section (5). Discard lockwashers (3).

NOTE

Perform step 2 for late model vehicles.

2. Loosen two hose clamps (7) and remove breather tube (6) from breather (8) and elbow (9).

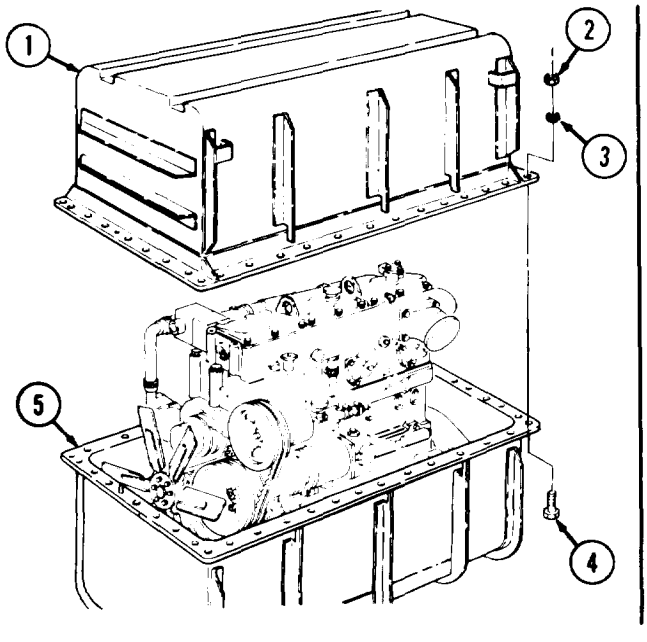

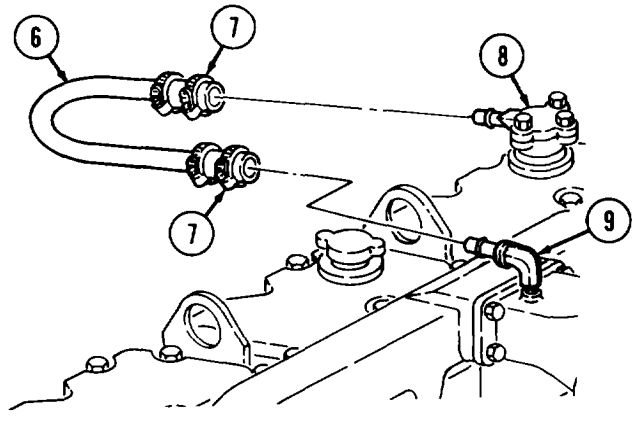

LATE MODEL ENGINES

3-25. ENGINE AND CONTAINER REPLACEMENT (Contd)

3. Remove two screws (1), washers (5), and trunnion cap (4) from front trunnion mount (3) and engine (2).
4. Remove two screws (6), lockwashers (10), and washers (9) from two rear trunnion mounts (8) and engine flywheel housing (7). Discard lockwashers (10).
5. Attach chain to lifting device and two engine lifting brackets (11).

WARNIN6

- All personnel must stand clear during lifting operations. A swinging or shifting load may cause injury to personnel.
- Lifting device must have a weight capacity greater than 4500 lbs. (2043 kg). Failure to do so may cause injury to personnel and/or damage to equipment.

NOTE

Assistant will help with steps 6 through 8.

6. Raise lifting device until all slack is removed from chain.
7. Remove engine (2) from lower container section (12).
8. Lift engine (2) onto transport stand.
9. Remove lifting device and chain from two engine lifting brackets (11).

b. Installation

NOTE

Prepare engine for installation (para. 3-26).

1. Attach chain to lifting device and two engine lifting brackets (11).

WARNIN6

- All personnel must stand clear during lifting operations. A swinging or shifting load may cause injury to personnel.
- Lifting device must have a weight capacity greater than 4500 lbs. (2043 kg). Failure to do so may cause injury to personnel and/or damage to equipment.

NOTE

Assistant will help with steps 2 through 4.

2. Raise lifting device until all slack is removed from chain.
3. Lift engine (2) from transport stand.
4. Install engine (2) in lower container section (12), ensuring all mounting holes are alined.
5. Remove lifting device and chain from two engine lifting brackets (11).

3-25. ENGINE AND CONTAINER REPLACEMENT (Contd)

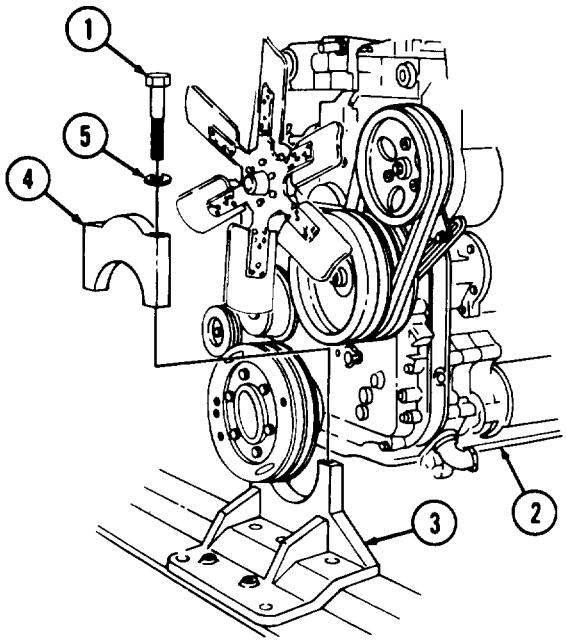

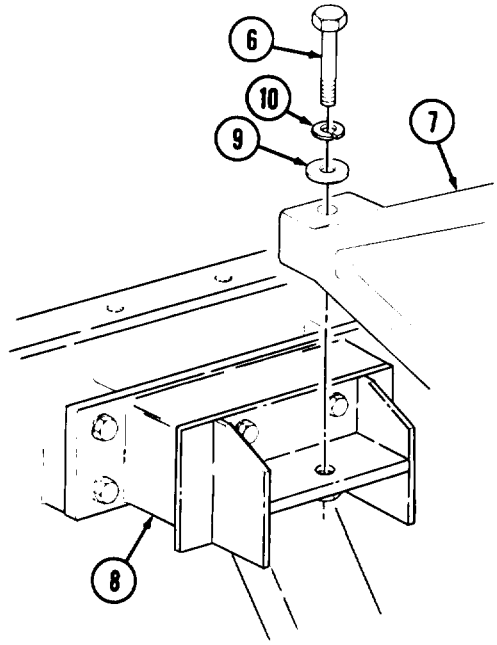

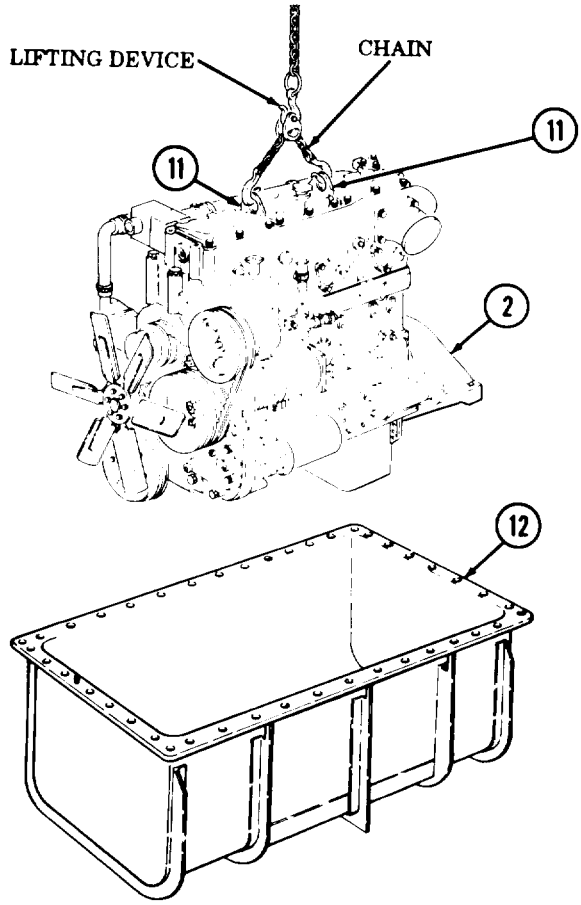

3-25. ENGINE AND CONTAINER REPLACEMENT (Contd)

NOTE

Perform step 6 for late model engines.

6. Install breather tube (1) on breather (3) and elbow (4). Tighten two hose clamps (2).
7. Install engine flywheel housing (6) on two rear trunnion mounts (7) with two washers (8), new lockwashers (9), and screws (5).
8. Install trunnion cap (13) on engine (11) and front trunnion mount (12) with two washers (14) and screws (10).
9. Install upper container section (15) on lower container section (19) with forty-two screws (18), new lockwashers (17), and nuts (16). Tighten nuts (16) 85-105 lb-ft (115-142 N•m).

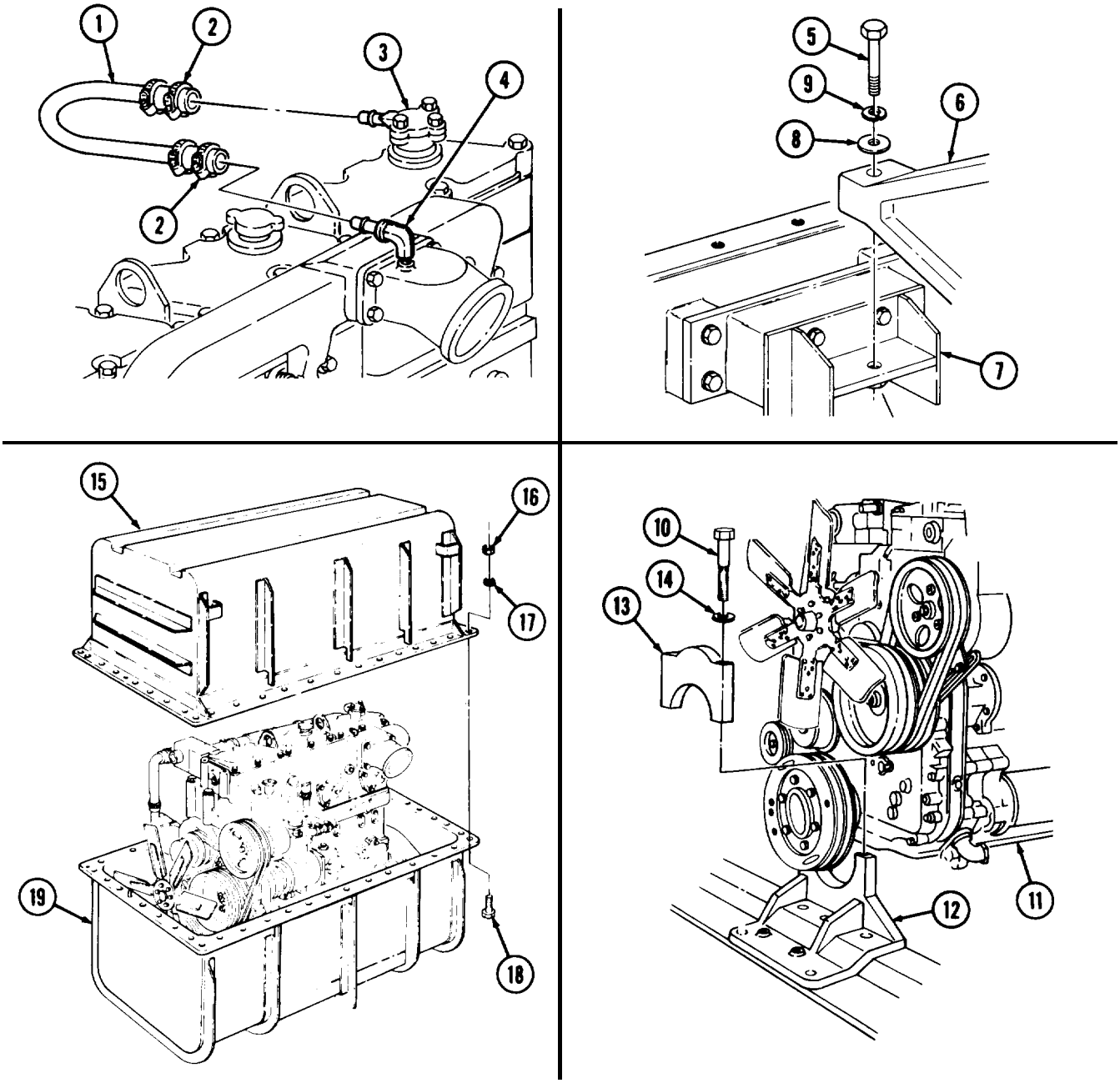

3-26. PREPARING REPLACEMENT ENGINE FOR INSTALLATION

THIS TASK COVERS:

a. Removal **b. Installation**

INITIAL SETUP

APPLICABLE MODELS
All

TOOLS
General mechanic's tool kit
(Appendix B, Item 1)

MATERIALS/PARTS
Four insulators (Appendix D, Item 162)
Antiseize tape (Appendix C, Item 50)
Cap and plug set (Appendix C, Item 6)

REFERENCES (TM)
TM 9-2320-260-20
TM 9-2320-260-34P-1

EQUIPMENT CONDITION
- Engine and transmission removed (para. 3-24),
- Transmission removed (para. 8-5).
- Upper and lower radiator hoses removed (TM 9-2320-260-20).

a. Removal

CAUTION

Cap or plug all openings immediately after disconnecting lines and hoses to prevent contamination. Remove cap or plugs prior to installation. Failure to do so may result in damage to equipment.

NOTE

Perform this task when preparing removed engine for installation into container.

1. Remove shutoff valve (2) and adapter (3) from water manifold (1).
2. Remove water temperature sending unit (4) from water manifold (1).

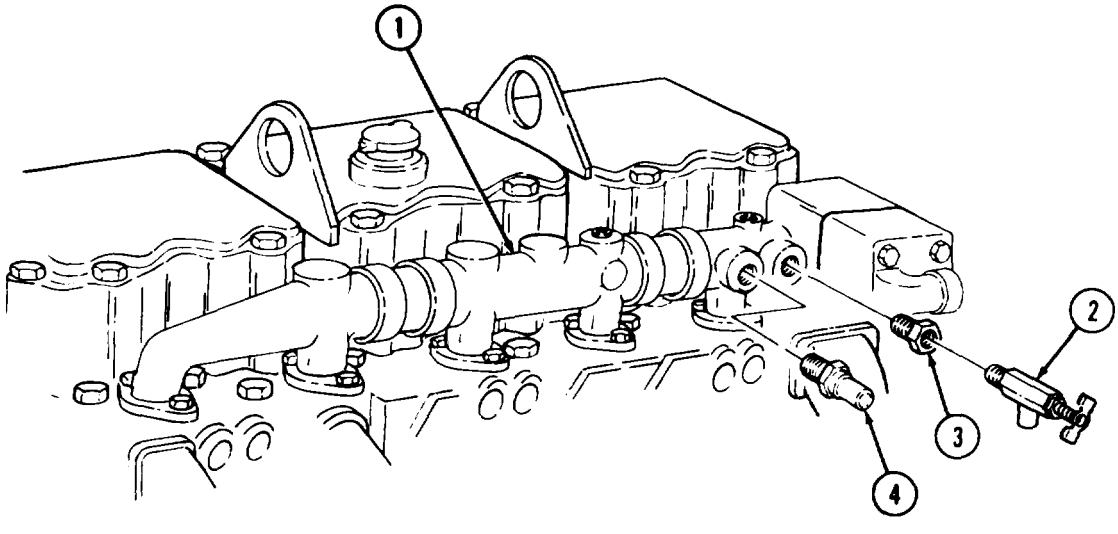

3-26. PREPARING REPLACEMENT ENGINE FOR INSTALLATION (Contd)

3. Remove elbow (1) from air intake connector (3).

NOTE

Perform step 4 for late model engines.

4. Remove elbow (2) from air intake connector (3).
5. Remove elbow (5) from engine block (4).
6. Remove two screws (6) and bracket (14) from engine (7).
7. Remove two nuts (11), washers (10), and outer insulators (9) from front engine mount bracket (8). Discard outer insulators (9).

NOTE

Assistant will help with step 8.

8. Remove radiator (13) and two inner insulators (12) from front engine mount bracket (8). Discard inner insulators (12).

b. Installation

NOTE

Assistant will help with step 2.

1. Install two new inner insulators (12) on radiator (13).
2. Position radiator (13) on front engine mount bracket (8) and install with two new outer insulators (9), washers (10), and nuts (11).
3. Install bracket (14) on engine (7) with two screws (6).

NOTE

Perform step 4 for late model engines.

4. Install elbow (2) on air intake connector (3).
5. Install elbow (1) on air intake connector (3).
6. Install elbow (5) on engine block (4).
7. Wrap threads of water temperature sending unit (18) with anti seize tape and install water temperature sending unit (18) on water manifold (15).
8. Install adapter (16) and shutoff valve (17) on water manifold (15).

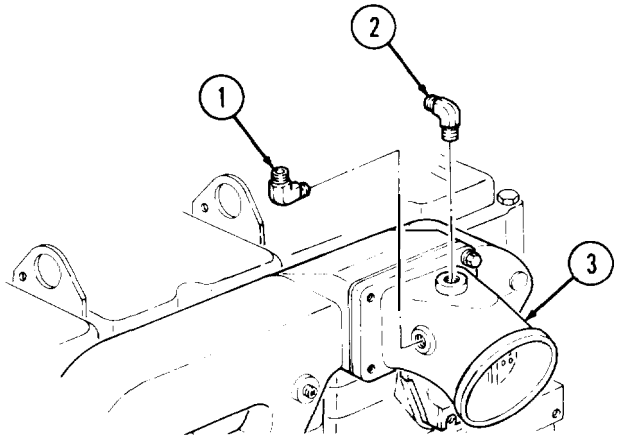

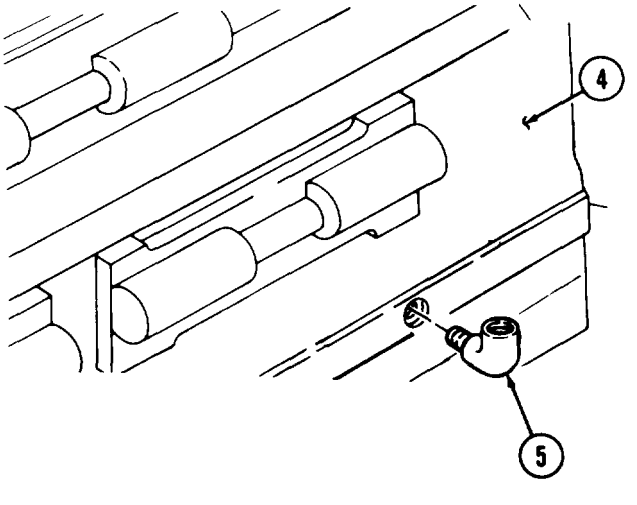

3-26. PREPARING REPLACEMENT ENGINE FOR INSTALLATION (Contd)

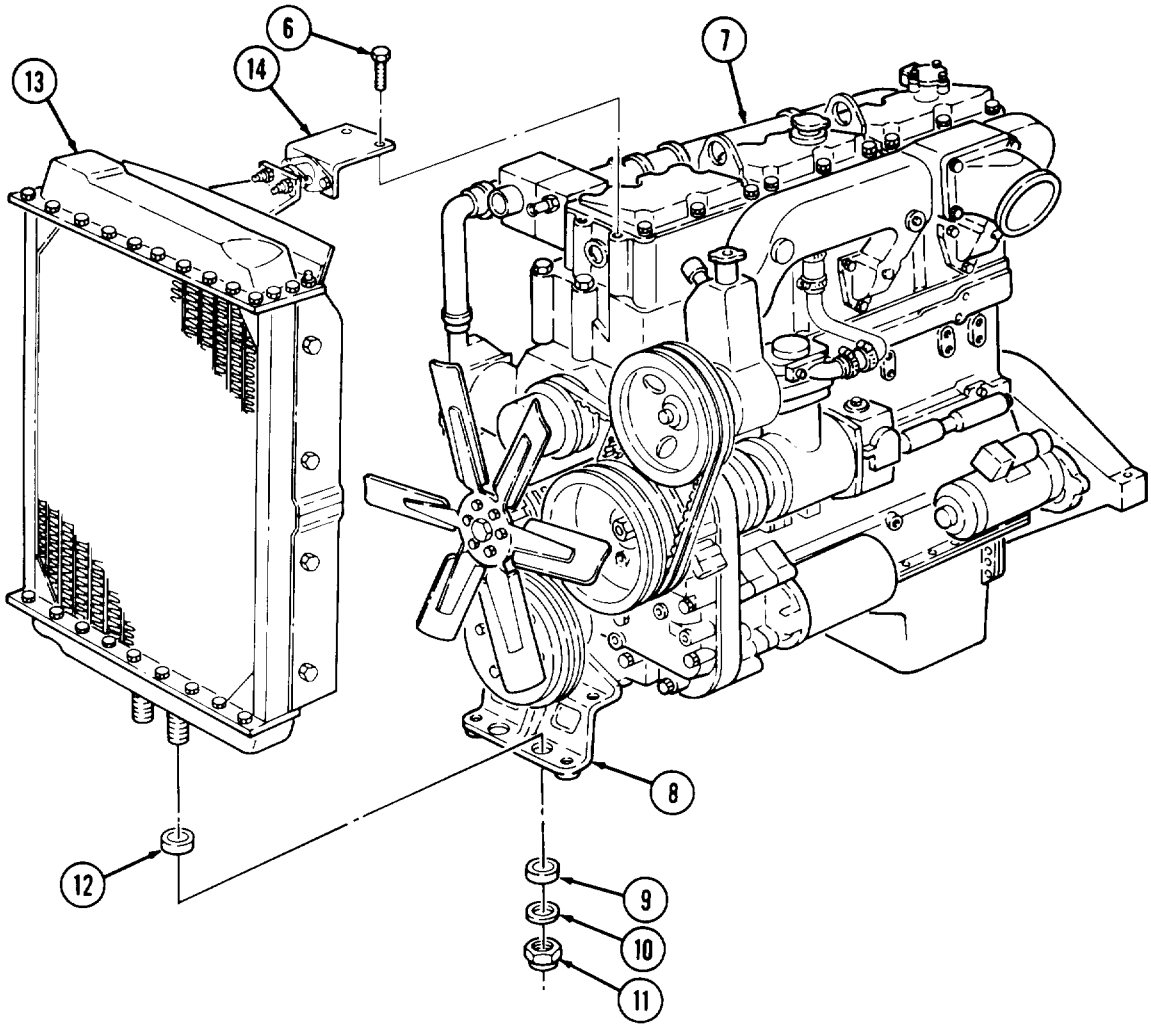

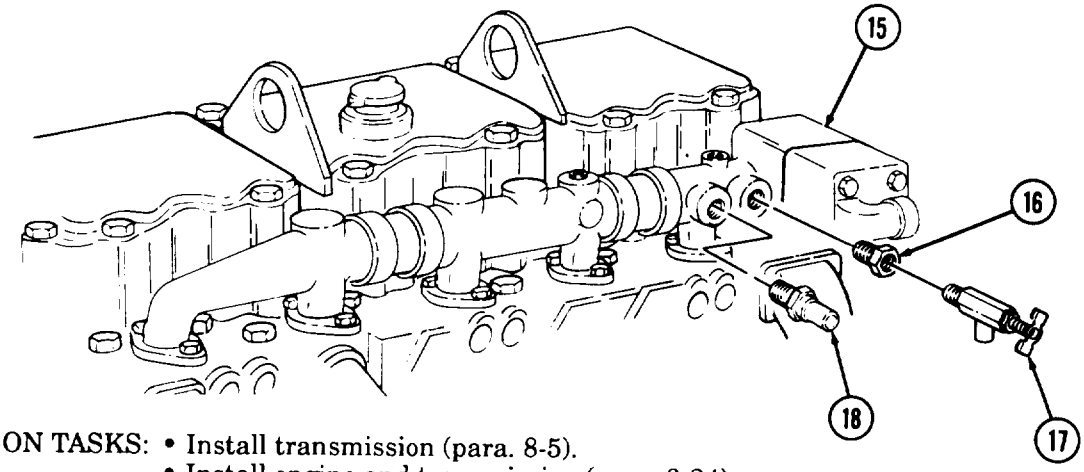

FOLLOW-ON TASKS: • Install transmission (para. 8-5).
• Install engine and transmission (para. 3-24).

3-27. STARTING REPAIRED OR REPLACED ENGINE

THIS TASK COVERS:

a. Priming Lubrication System
b. Out-of-Chassis Run-In
c. In-Chassis Run-In

INITIAL SETUP

APPLICABLE MODELS
All

TOOLS
Idle adjustment tool (Appendix B, Item 65)
Oil primary pump (Appendix B, Item 143)
Crimping tool (Appendix B, Item 128)

MATERIALS/PARTS
Seal (Appendix D, Item 411)

PERSONNEL REQUIRED
Two

REFERENCES (TM)
LO 9-2320-260-12
TM 9-2320-260-10
TM 9-2320-260-34P-1

SPECIAL ENVIRONMENT CONDITIONS
Perform this procedure in a well-ventilated work area.

GENERAL SAFETY INSTRUCTIONS
Ensure engine compartment is clear of tools and work material before starting engine.

a. Priming Lubrication System

CAUTION

Engine lubrication system cannot be primed through bypass filter. Insufficient lubrication will result, causing damage to engine.

1. Remove plug (4) from gearcase cover flange (3).
2. Connect oil priming pump to orifice (1) in front gearcase cover flange (3).
3. Prime engine (2) until pressure reaches 30 psi (207 kPa).

CAUTION

Do not crank engine continuously for more than thirty seconds. Wait two to five minutes before repeating procedure. Failure to do so may result in damage to starter motor.

4. Close fuel shutoff valve and crank engine (TM 9-2320-260-10) for fifteen seconds while maintaining 15 psi (103 kPa) pump pressure.
5. Disconnect oil priming pump and replace pipe plug (4) in gearcase cover flange (3).
6. Check oil level (LO 9-2320-260-12).

b. Out-of-Chassis Run-In

CAUTION

- If oil temperature rises sharply above 255°F (124°C), stop engine immediately and correct as necessary. Failure to do so may result in damage to equipment.
- If any leak or abnormal noise is noted, stop engine immediately and correct as necessary. Failure to do so may result in damage to equipment.

3-27. STARTING REPAIRED OR REPLACED ENGINE (Contd)

NOTE

Follow manufacturer's instructions for dynamometer use. Ensure dynamometer being used is torque rated at 685 lb-ft (929 N•m). Perform steps 1 through 3 if dynamometer is available.

1. Connect engine (2) to dynamometer.
2. Check engine (2) oil level (LO 9-2320-260-12).
3. Start and run engine (2) until oil temperature reaches 180°F (82°C).
4. Stop engine (2), inspect oil level, and check for leaks.

NOTE

Coolant should not exceed 195°F (91°C) or drop below 175°F (79°C) during engine load operation.

5. Restart and run engine (2) at 1575 rpm, 125 hp for fifteen minutes.
6. Run engine (2) at 2100 rpm, 188 hp for fifteen minutes.
7. Run engine (2) at 2100 rpm, 213 hp for fifteen minutes.
8. Run engine (2) at 2100 rpm, 225 hp for fifteen minutes.
9. Run engine (2) at 2100 rpm, 240 hp for five minutes.
10. Remove engine (2) load and idle until temperature begins to drop.
11. Stop engine (2) and inspect for leaks.
12. Check oil level (LO 9-2320-260-12).
13. Disconnect engine (2) from dynamometer.

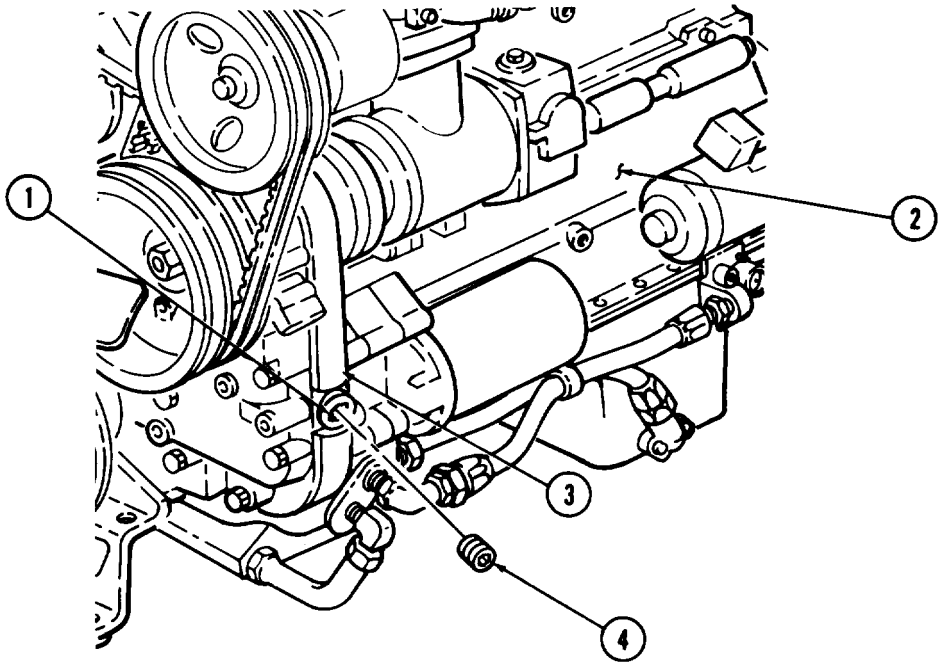

3-27. STARTING REPAIRED OR REPLACED ENGINE (Contd)

c. In-Chassis Run-In

1. Inspect oil and coolant levels (LO 9-2320-260-12).

WARNING

Ensure engine compartment is free of all tools and working materials before starting engine. Failure to do so may result in injury to personnel.

CAUTION

If any leaks, abnormal noises, or sudden oil pressure drop is observed, stop engine immediately and correct as necessary.

2. Start and idle engine (TM 9-2320-260-10) at 800-1000 rpm for five to ten minutes, observing oil pressure. If oil pressure drops below 10 psi (69 kPa) or rises sharply above 30 psi (207 kPa), stop engine (TM 9-2320-260-10) and correct as necessary. Refer to troubleshooting (para. 2-6).
3. Stop engine and check oil and coolant levels (LO 9-2320-260-12 and TM 9-2320-260-10).
4. Inspect for leaks. If leaks exist, correct as necessary.
5. Start and run engine (TM 9-2320-260-10) at 1/4 to 1/2 throttle until coolant temperature reaches 165°- 195°F (74°0-91°C).
6. Stop engine and check oil and coolant levels (LO 9-2320-260-12 and TM 9-2320-260-10).

NOTE

It may be necessary to block air flow to radiator.

7. Inspect for leaks. If leaks exist, correct as necessary.
8. Start and run engine at idle for five to ten minutes (TM 9-2320-260-10).

NOTE

- Engine idle speed check and adjustment cannot be made on a cold engine.
- Check that engine idle speed is 600-650 rpm; if it is not perform step 10.

9. Break special seal (5) and remove pipe plug (3) from governor spring pack cover (4).
10. Using idle adjustment tool, turn adjusting screw (6) clockwise to increase, or counterclockwise to decrease idle speed. Correct idle speed to 600-650 rpm.
11. Install pipe plug (3) in governor spring pack cover (4).
12. Thread seal wire (2) through pipe plug (3) and two hex head cover screws (1), and twist seal wire (2) until secure and crimp seal (5) with crimping tool.
13. Stop engine and check oil and coolant levels (LO 9-2320-260-12 and TM 9-2320-260-10).
14. Inspect for leaks. If leaks are found, correct as necessary.

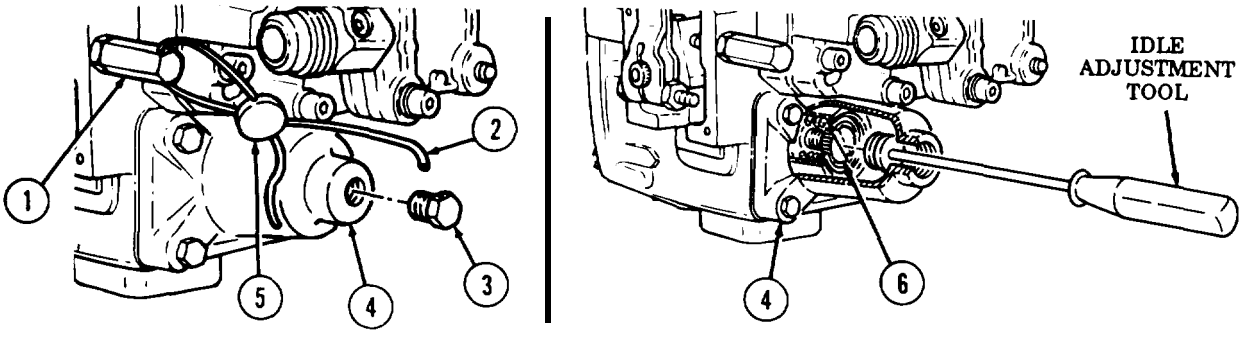

Section IV. ENGINE DISASSEMBLY INTO SUBASSEMBLIES

3-28. ENGINE DISASSEMBLY INTO SUBASSEMBLIES INDEX

PARA. NO.	TITLE	PAGE NO.
3-29.	Mounting Engine on Repair Stand	3-107
3-30.	Vibration Damper Removal	3-109
3-31.	Crankshaft Flange Removal	3-110
3-32.	Accessory Drive and Pulley Removal	3-111
3-33.	Front Gear Cover Maintenance	3-112
3-34.	Oil Pump Removal	3-115
3-35.	Intake Manifold Maintenance	3-116
3-36.	Lifting Brackets and Rocker Lever Housing Covers Removal	3-118
3-37.	Rocker Lever Housings and Push Tubes Removal	3-119
3-38.	Fuel Crossover Connectors Removal	3-120
3-39.	Crossheads Removal	3-121
3-40.	Cylinder Heads Removal	3-122
3-41.	Cam Followers Removal	3-123
3-42.	Flywheel and Clutch Removal	3-124
3-43.	Flywheel Housing Removal	3-125
3-44.	Camshaft Maintenance	3-126
3-45.	Rear Cover and Oil Seal Removal	3-129
3-46.	Oil Pan Removal	3-130
3-47.	Piston and Connecting Rod Maintenance	3-132
3-48.	Crankshaft. and Main Bearing Removal	3-134

3-29. MOUNTING ENGINE ON REPAIR STAND

THIS TASK COVERS:

Installation

INITIAL SETUP

APPLICABIE MODELS

All

TOOLS

General mechanic's tool kit (Appendix B, Item 1)
Sling (Appendix B, Item 142)
Lifting device
Engine mount adapters (Appendix B, Item 90)
Engine repair stand (Appendix B, Item 89)

PERSONNEL REQUIRED

Two

REFERENCES (TM)

TM 9-2320-260-20
TM 9-2320-260-34P-1

EQUIPMENT CONDITION

- Engine and transmission removed (para. 3-24).
- Engine access cover removed (TM 9-2320-260-20).
- Transmission removed (para. 8-5).
- Engine oil cooler removed (para. 3-12).
- Water header plates removed (para, 3-4).
- Radiator removed (TM 9-2320-260-20).
- Crankcase breather removed (TM 9-2320-260-20).
- Alternator and mounting bracket removed (TM 9-2320-260-20).
- Exhaust manifold removed (para. 3-11).
- Power steering pump removed (para. 12-8).

GENERAL SAFETY INSTRUCTIONS

All personnel must stand clear during lifting operations.

3-29. MOUNTING ENGINE ON REPAIR STAND (Contd)

Installation

NOTE

Assistant will help with this procedure.

1. Install rear engine mount adapter on rear water header (11) with five washers (8) and screws (7).
2. Install front engine mount adapter on front water header (2) with two washers (3) and screws (4).
3. Install chain on engine lifting brackets (1) and lifting device.

WARNING

All personnel must stand clear during lifting operations. A shifting or swinging load may cause injury to personnel.

4. Carefully lift, and position engine (10) against engine repair stand mounting plate.
5. Aline holes on engine repair stand mounting plate with holes on mounting adapters and engine access opening (9).
6. Install engine (10) on repair stand mounting plate with eight washers (5) and screws (6).
7. Remove lifting device and chain from engine lifting brackets (1).

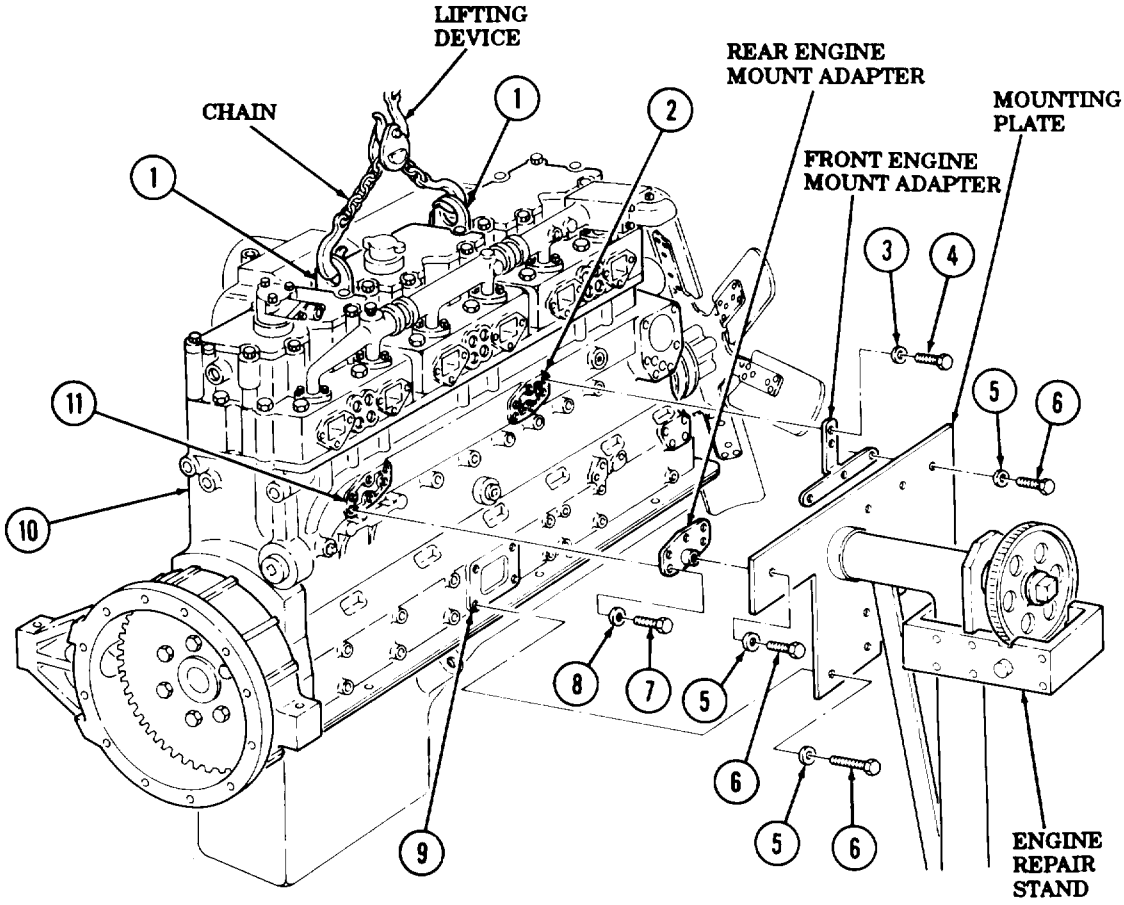

3-30. VIBRATION DAMPER REMOVAL

THIS TASK COVERS:

Removal

INITIAl SETUP

APPLICABLE MODELS
All

TOOLS
General mechanic's tool kit (Appendix B, Item 1)
Soft-head hammer (Appendix B, Item 47)

REFERENCES (TM)
TM 9-2320-260-20
TM 9-2320-260-34P-1

EQUIPMENT CONDITION
- Engine mounted on repair stand (para. 3-29).
- Fan blade removed (TM 9-2320-260-20).

Removal

NOTE

Check and record vibration damper runout and wobble (para. 3-5) prior to removal.

1. Remove six screws (3) and lockwashers (2) from vibration damper (1) and crankshaft flange (4). Discard lockwashers (2).
2. Using soft-head hammer, tap vibration damper (1) and remove from crankshaft flange (4).

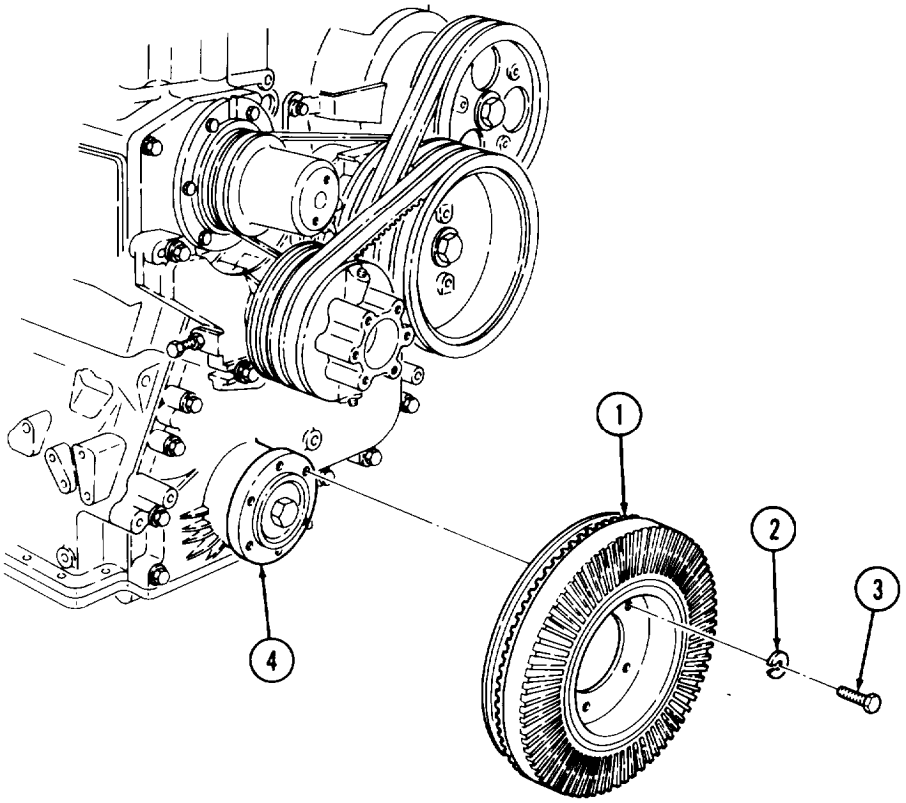

3-31. CRANKSHAFT FLANGE REMOVAL

THIS TASK COVERS:

Removal

INITIAL SETUP

APPLICABLE MODELS
All

SPECIAL TOOLS
Crankshaft flange puller (Appendix B, Item 67)

TOOLS
General mechanic's tool kit (Appendix B, Item 1)

TOOLS (Contd)
1-1/16-in. socket, 3/4-in. dr. (Appendix B, Item 68)
l-1/8-in. socket, 3/4-in. dr. (Appendix B, Item 37)

REFERENCES (TM)
TM 9-2320-260-34P-1

EQUIPMENT CONDITION
Vibration damper removed (para. 3-30).

Removal

NOTE

Check and record crankshaft flange runout and wobble (para. 3-6) prior to removal.

1. Remove screw (3) and retainer (2) from crankshaft flange (1).
2. Using crankshaft flange puller, remove crankshaft flange (1) from crankshaft (4).

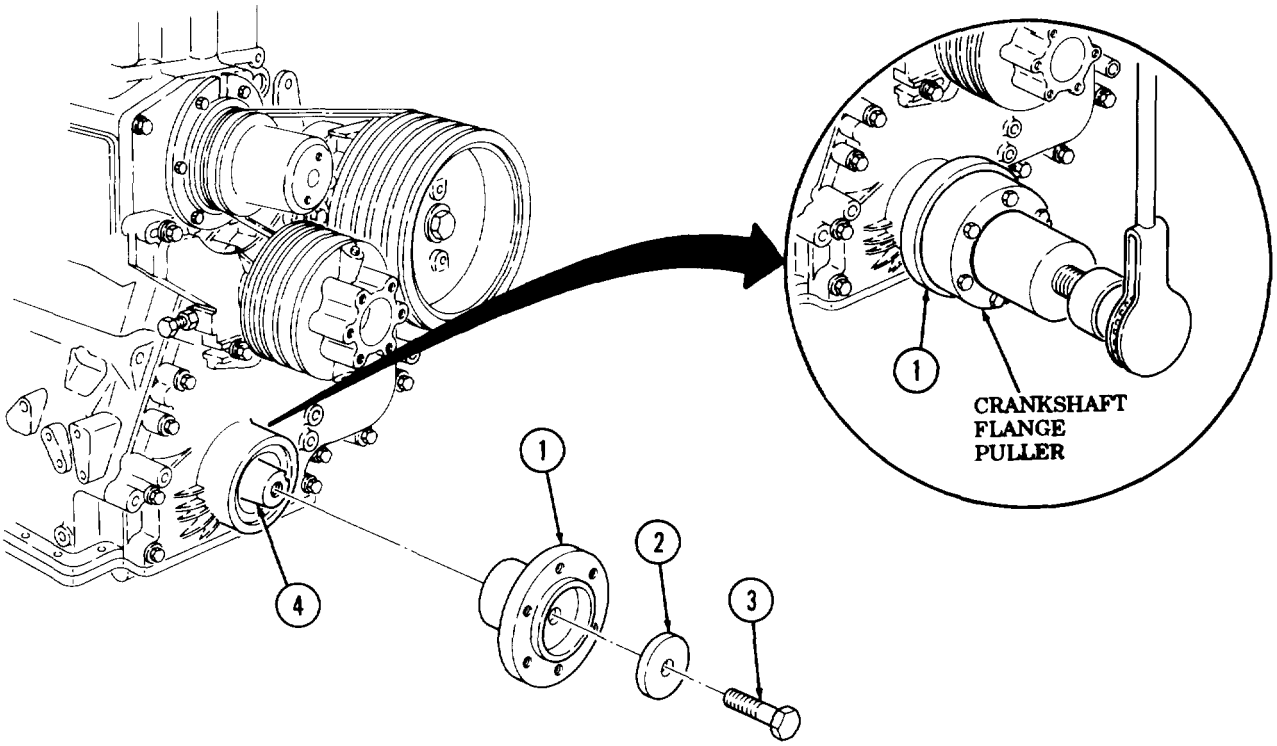

3-32. ACCESSORY DRIVE AND PULLEY REMOVAL

THIS TASK COVERS:

Removal

INITIAL SETUP

APPLICABLE MODELS
All

SPECIAL TOOLS
Universal puller kit (Appendix B, Item 75)

TOOLS
General mechanic's tool kit (Appendix B, Item 1)

REFERENCES (TM)
TM 9-2320-260-20
TM 9-2320-260-34P-1

EQUIPMENT CONDITION
- Engine mounted on repair stand (para. 3-29).
- Air compressor removed (para. 11-3).
- Fan blade removed (TM 9-2320-260-20).
- Water pump drivebelt removed (TM 9-2320-260-20).

Removal

1. Remove nut (2) and washer (3) from accessory driveshaft (7).
2. Using puller, remove accessory drive pulley (4), pin (1), pulley sleeve (5), and oil slinger (6) from accessory driveshaft (7). Discard pin (1).
3. Remove five screw-assembled lockwashers (9), accessory drive (10), and gasket (8) from cylinder block (11). Discard gasket (8) and screw-assembled lockwashers (9).

NOTE

For disassembly, cleaning, inspection, and assembly, refer to para. 3-9.

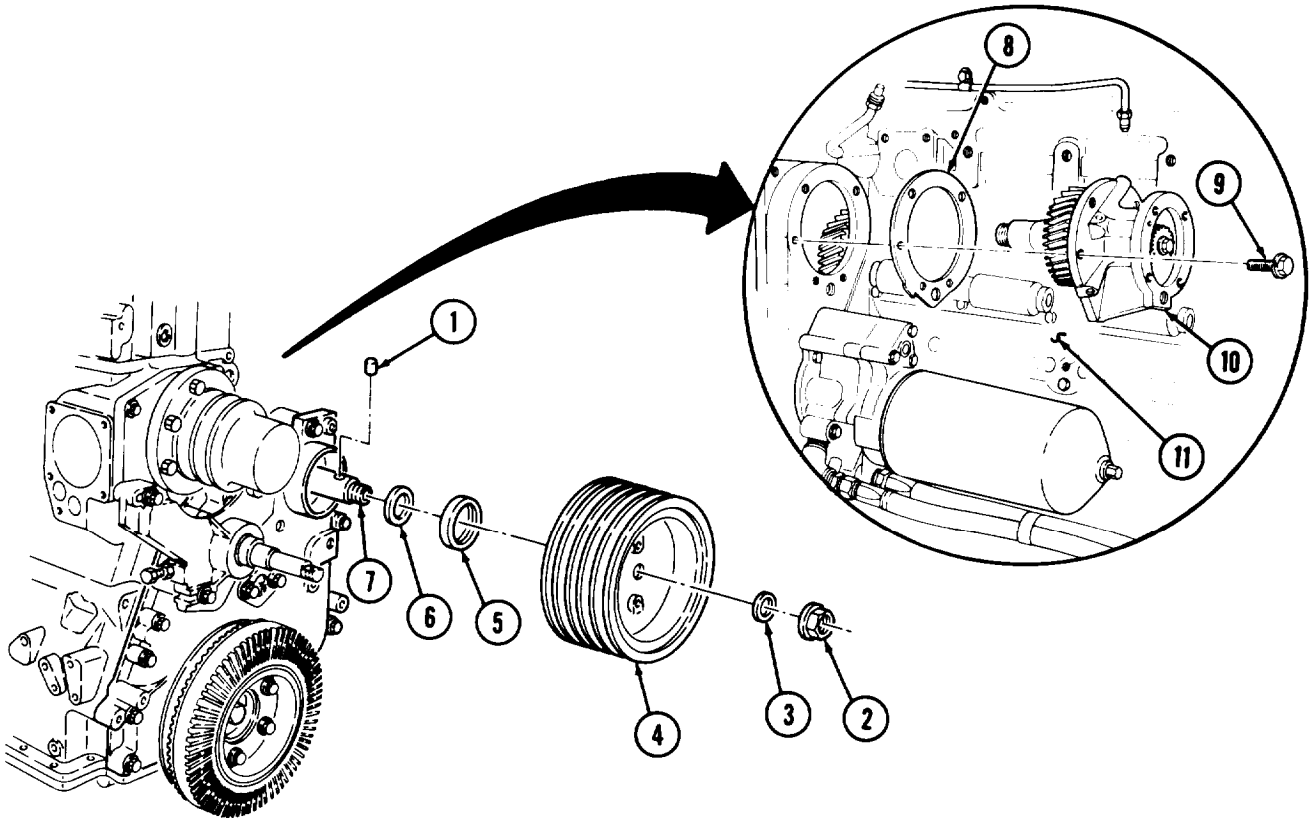

3-33. FRONT GEAR COVER MAINTENANCE

THIS TASK COVERS:

a. Removal
b. Disassembly
c. Cleaning and Inspection
d. Assembly

INITIAL SETUP

APPLICABLE MODELS
All

TOOLS
General mechanic's tool kit (Appendix B, Item 1)
Bushing installer (Appendix B, Item 91)
Soft-head hammer (Appendix B, Item 47)
Outside micrometer (Appendix B, Item 8)
Two dowel pins (Appendix E, Figure E-6)

MATERIALS/PARTS
Seal (Appendix D, Item 407)
Packing (Appendix D, Item 303)

MATERIALS/PARTS (Contd)
Seal (Appendix D, Item 416)
Antiseize tape (Appendix C, Item 50)

REFERENCES (TM)
TM 9-2320-260-20
TM 9-2320-260-34P-1

EQUIPMENT CONDITION
- Crankshaft flange removed (para. 3-31).
- Accessory drive and pulley removed (para. 3-32).
- Fan bracket and hub removed (TM 9-2320-260-20).

a. Removal

1. Remove four screws (6), lockwashers (5), and washers (4) from oil pan (2) and front gear cover (8). Discard lockwashers (5).

NOTE

Screws attaching front gear cover are different lengths and must be installed in their proper position. Tag screws for installation.

2. Remove fifteen screws (7), two screws (9), lockwashers (10), and washers (11) from front gear cover (8). Discard lockwashers (10).
3. Install two 4 in. (102 mm) dowel pins on each side of cylinder block (3) to support front gear cover (8) during removal.
4. Using softhead hammer, loosen and remove front gear cover (8) and gasket (1) from cylinder block (3). Discard gasket (1).

b. Disassembly

1. Remove seal (17) and sleeve bearing (16) from bore (14). Discard seal (17).
2. Remove sleeve bushing (23) and seal (24) from bore (25). Discard seal (24).
3. Remove two screws (18), camshaft cover (19), spacer plate (20), shim(s) (21), and packing (22) from boss (13). Discard packing (22).
4. Remove pipe plugs (12) and (15) from front gear cover (8).

c. Cleaning and Inspection

1. For general cleaning instructions, refer to para. 2-8.
2. For general inspection instructions, refer to para 2-9.

3-33. FRONT GEAR COVER MAINTENANCE (Contd)

3. Inspect sleeve bearing (16) for wear, breaks, cracks, and distortions. Replace sleeve bearing (16) if worn, broken, cracked, or distorted.
4. Inspect front gear cover (8) for warpage, breaks, cracks, and stripped threads in tapped holes. Replace front gear cover (8) if warped, broken, cracked, or threads are stripped.
5. Inspect bores (14) and (25) in front gear cover (8) for smoothness and out-of-roundness. Replace front gear cover (8) if bores (14) and (25) are rough or out-of-round.
6. Inspect sleeve bushing (23) for breaks, cracks, distortion, or excessive wear. Replace sleeve bushing (23) if broken, cracked, distorted, or excessively worn.
7. Inspect camshaft cover (19) for deep scores, scratches, cracks, breaks, or excessive wear. Replace camshaft cover (19) if deeply scored, scratched, cracked, broken, or excessively worn.

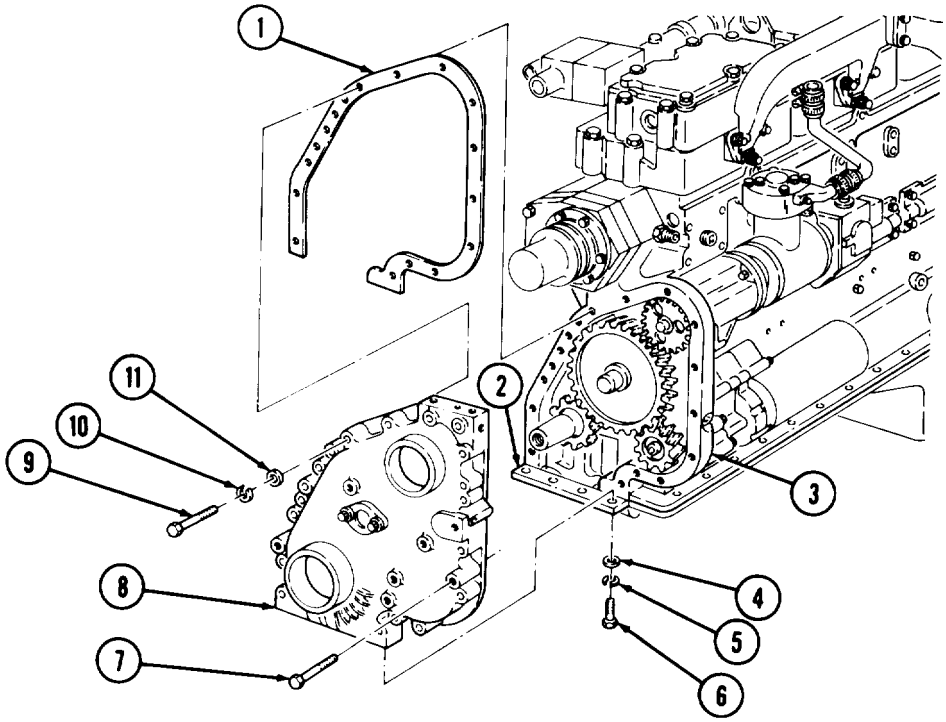

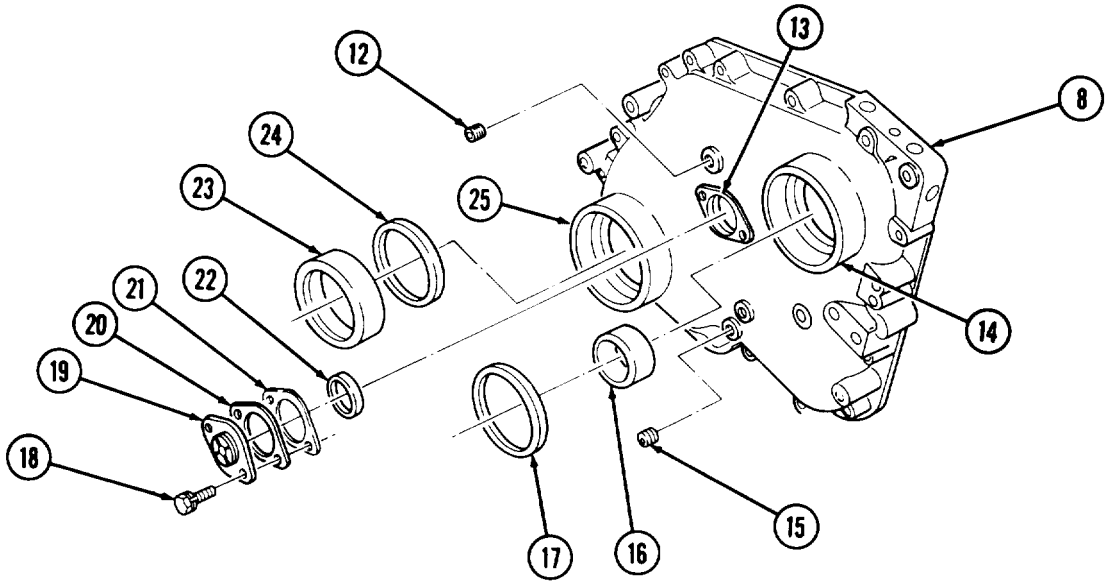

3-33. FRONT GEAR COVER MAINTENANCE (Contd)

d. Assembly

1. Wrap threads of pipe plugs (1) and (5) with antiseize tape and install on front gear cover (3).
2. Using bushing installer, install new seal (14) and sleeve bushing (13) in bore (15).
3. Install sleeve bearing (6) and new seal (7) in bore (4).
4. Install new packing (12), shim(s) (11), spacer plate (10), and camshaft cover (9) on boss (2) with two screws (8). Finger tighten screws (8).

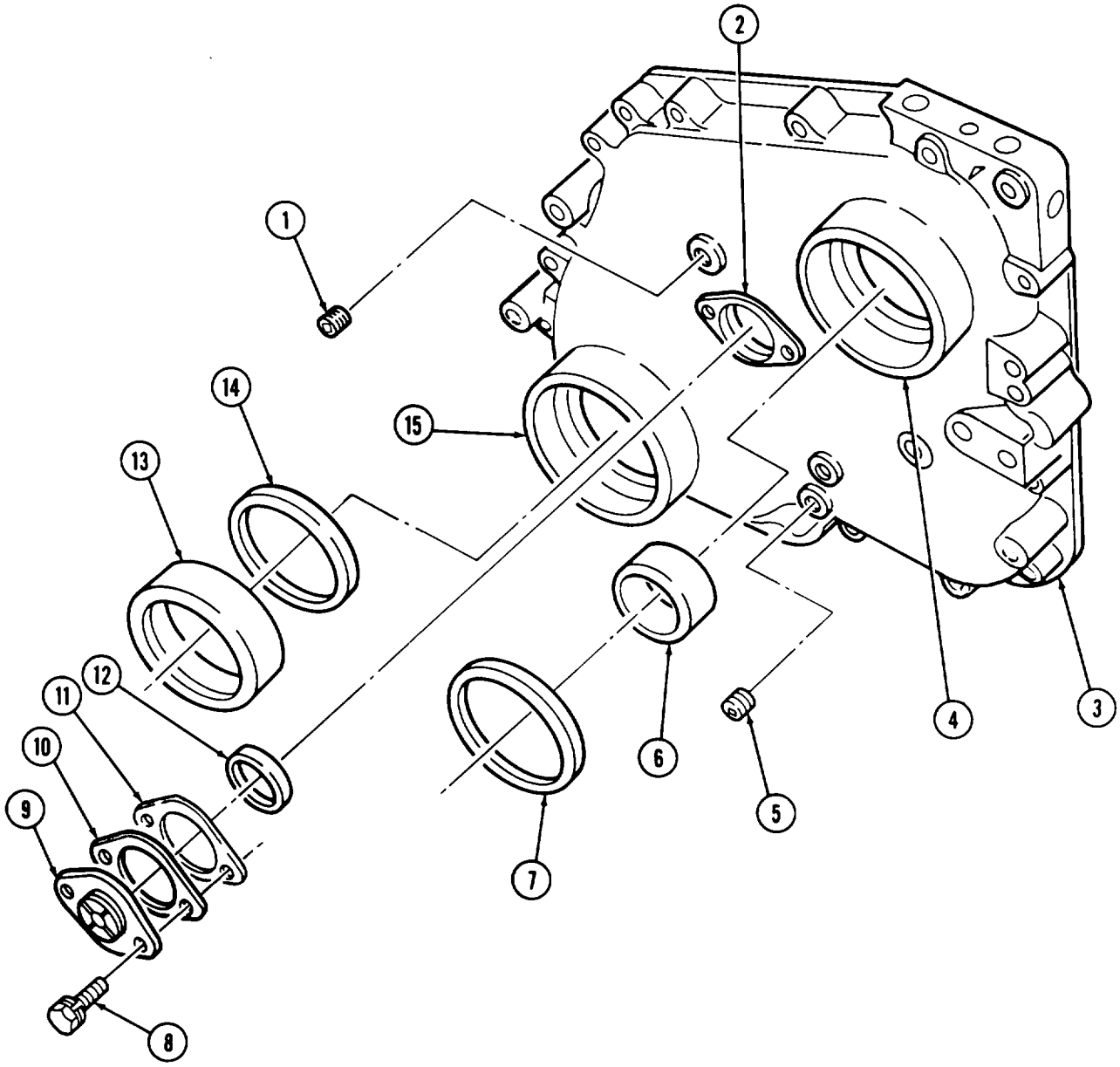

3-34. OIL PUMP REMOVAL

THIS TASK COVERS:

Removal

INITIAL SETUP

APPLICABLE MODELS

All

TOOLS

General mechanic's tool kit (Appendix B, Item 1)

REFERENCES (TM)

TM 9-2320-260-20
TM 9-2320-260-34P-1

EQUIPMENT CONDITION

- Engine mounted on repair stand (para. 3-29).
- Engine oil filter removed (TM 9-2320-260-20).

Removal

1. Rotate cylinder block (10) so oil pan (1) is on top.
2. Disconnect oil pump pickup hose (2) from oil pump (4).
3. Disconnect oil pump return hose (11) from oil pump (4).
4. Remove front sump tube (6) from oil pan (1) and oil pump (4).

NOTE

Tag screws for installation.

5. Remove two screws (8) from oil pump (4).
6. Remove screw-assembled washer (5), two screws (3), lockwashers (9), oil pump (4), and gasket (7) from cylinder block (10). Discard lockwashers (9) and gasket (7).

NOTE

For disassembly, cleaning, inspection, repair, and assembly, refer to para. 3-52.

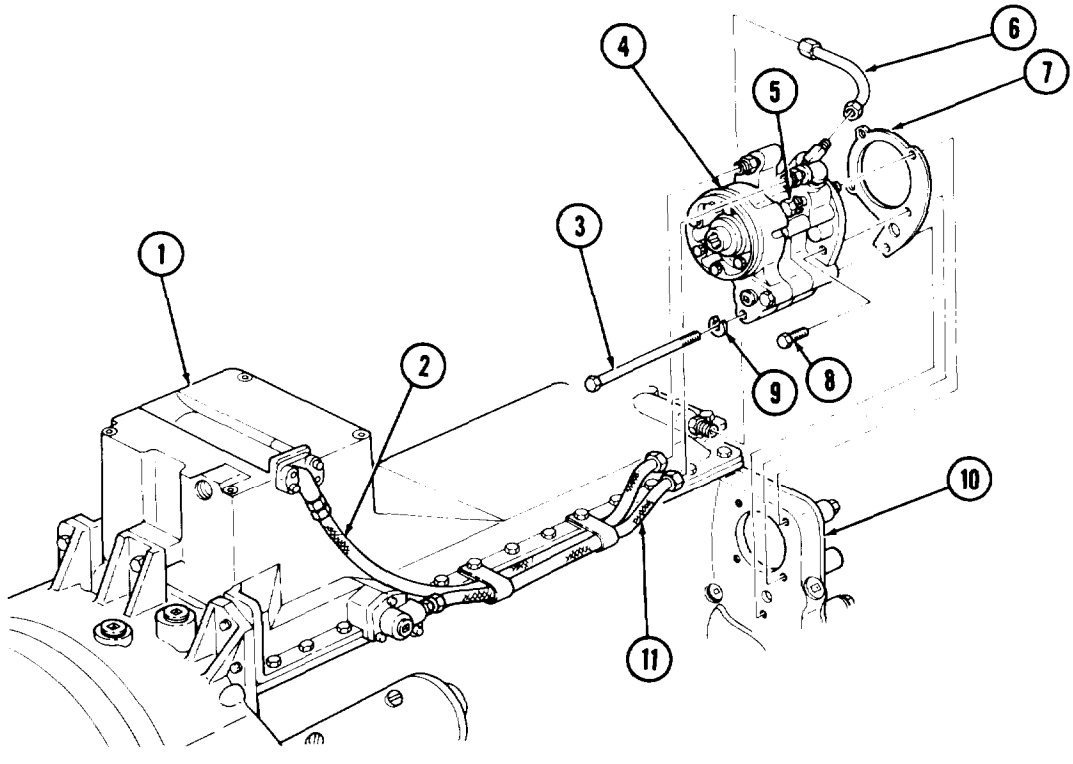

3-35. INTAKE MANIFOLD MAINTENANCE

THIS TASK COVERS:

a. Removal
b. Disassembly
c. Assembly

INITIAL SETUP

APPLICABLE MODELS
All

TOOLS
General mechanic's tool kit (Appendix B, Item 1)

MATERIAIS/PARTS
Gasket (Appendix D, Item 153)
Antiseize tape (Appendix C, Item 50)

REFERENCES (TM)
TM 9-2320-260-20
TM 9-2320-260-34P-1

EQUIPMENT CONDITION
- Engine mounted on repair stand (para. 3-29).
- Glow plug and preheater nozzle removed (TM 9-2320-260-20).

a. Removal

1. Loosen clamp (1) and disconnect hose (2) from intake manifold (5).
2. Remove nine screws (6), lockwashers (7), washers (8), fuel line clamps (9), intake manifold (5), and three gaskets (4) from cylinder heads (3). Discard gaskets (4) and lockwashers (7).

NOTE

On many late-model engines, lockwashers have been replaced by screw-assembled lockwashers.

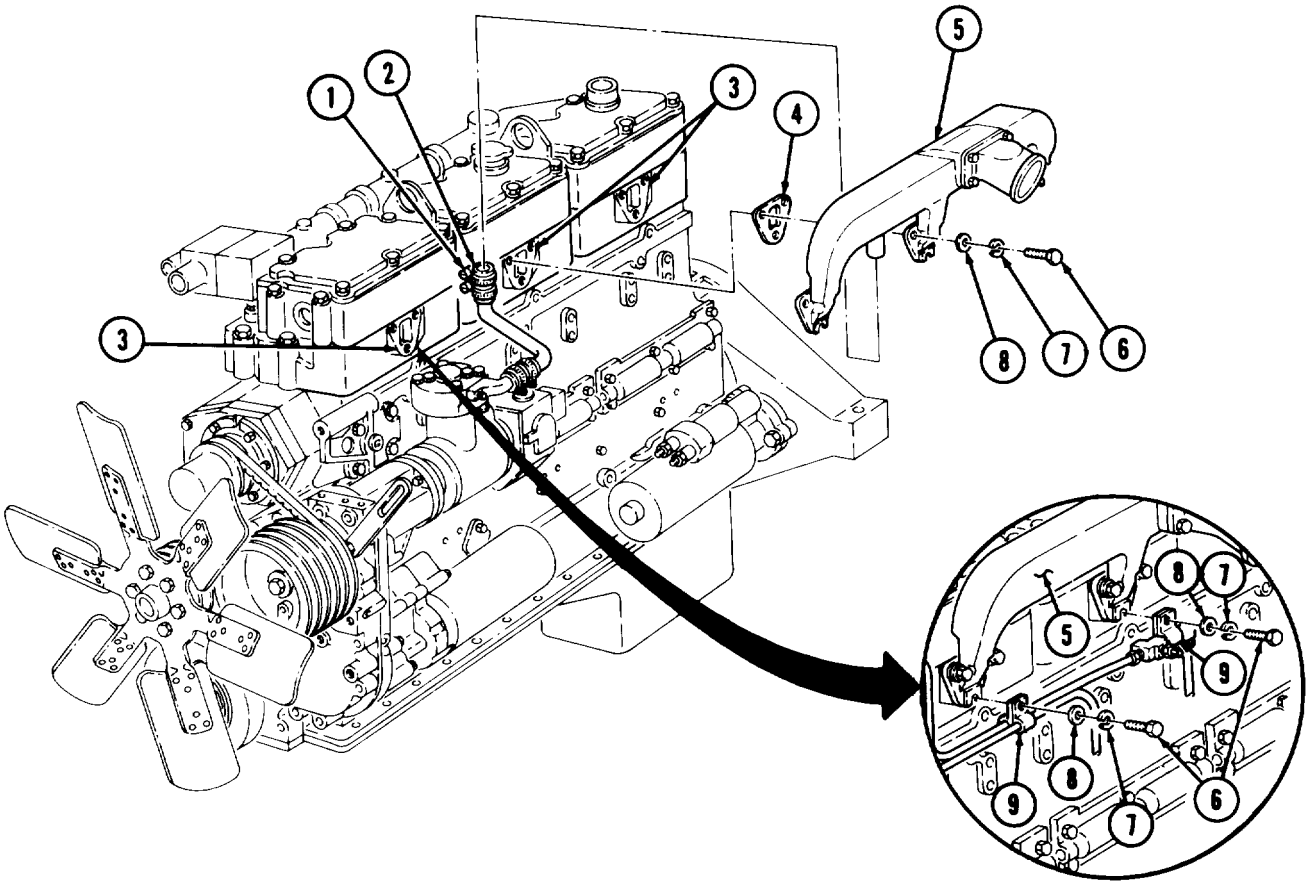

3-35. INTAKE MANIFOLD MAINTENANCE (Contd)

b. Disassembly

1. Remove elbow (17) from air intake connection (11).
2. Remove four screws (16), air intake connection (11), and gasket (10) from intake manifold (5). Discard gasket (10).
3. Remove pipe plug (19) from intake manifold (5).

c. Assembly

1. Install new gasket (10) and air intake connection (11) on intake manifold (5) with four screws (16).
2. Wrap threads of pipe plug (19) with antisieze tape and install on intake manifold (5).

NOTE

Perform steps 3 through 5 only if installing a new air intake connection.

3. Remove machine plug (14) and spacer ring (15) from air intake connection (11).
4. Remove machine plug (12) and gasket (13) from air intake connection (11).
5. Remove pipe plug (18) from air intake connection (11).
6. Install elbow (17) on air intake connection (11).

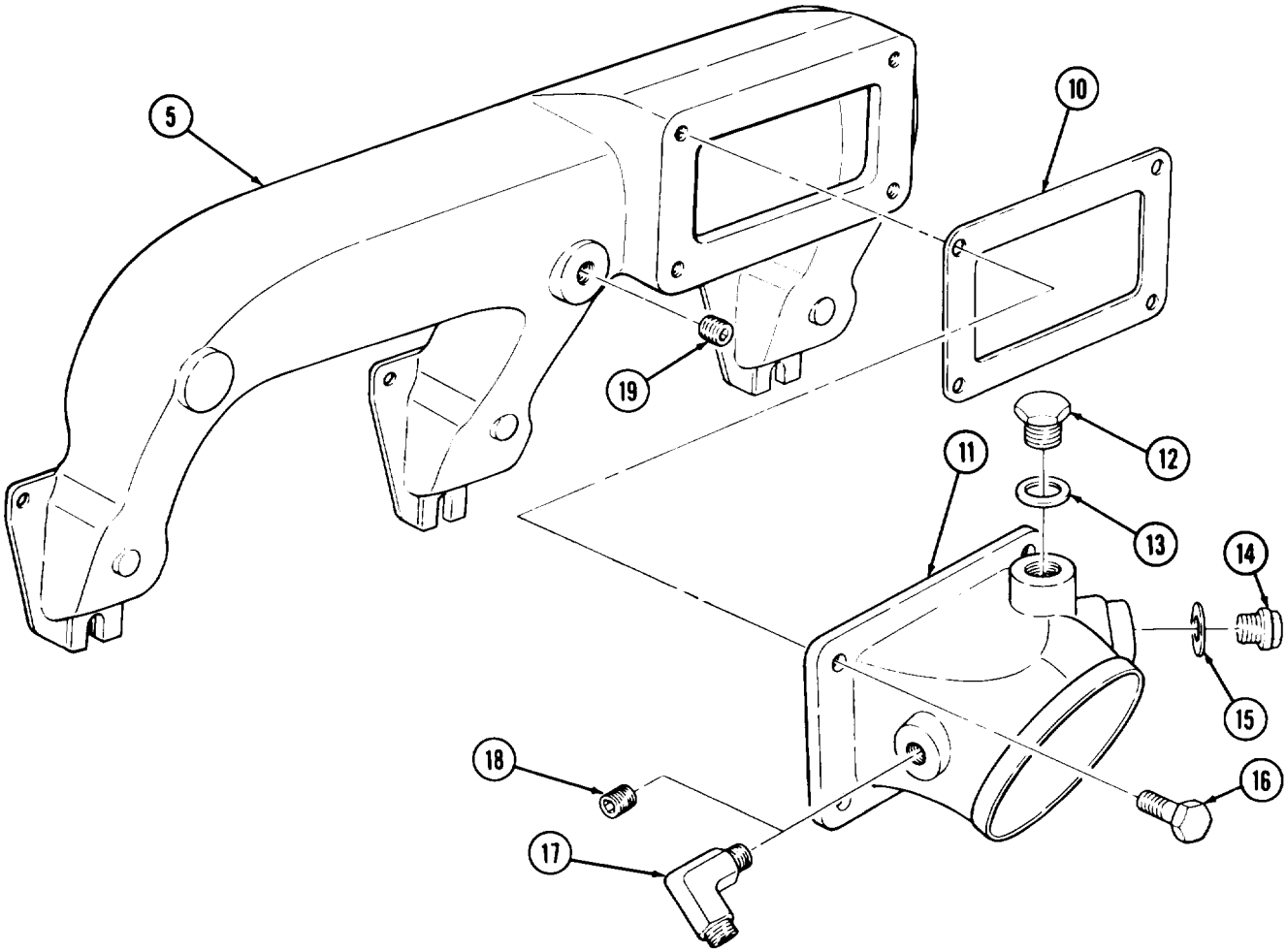

3-36. LIFTING BRACKETS AND ROCKER LEVER HOUSING COVERS REMOVAL

THIS TASK COVERS:

a. Lifting Bracket Removal **b. Rocker Lever Housing Cover Removal**

INITIAL SETUP

APPLICABIE MODELS
All

TOOLS
General mechanic's tool kit (Appendix B, Item 1)

REFERENCES (TM)
TM 9-2320-260-34P-1

EQUIPMENT CONDITION
Engine mounted on repair stand (para. 3-29).

a. Lifting Bracket Removal

NOTE

Both lifting brackets are removed the same. This procedure covers one lifting bracket.

Remove two screws (2), lockwashers (3), and lifting bracket (4) from rocker lever housings (5). Discard lockwashers (3).

b. Rocker Lever Housing Cover Removal

NOTE

All three rocker lever housing covers are removed the same. This procedure covers one rocker lever housing cover.

Remove five screws (1), ocker lever housing cover (6), and gasket (7) from rocker lever housing (5). Discard gasket (7).

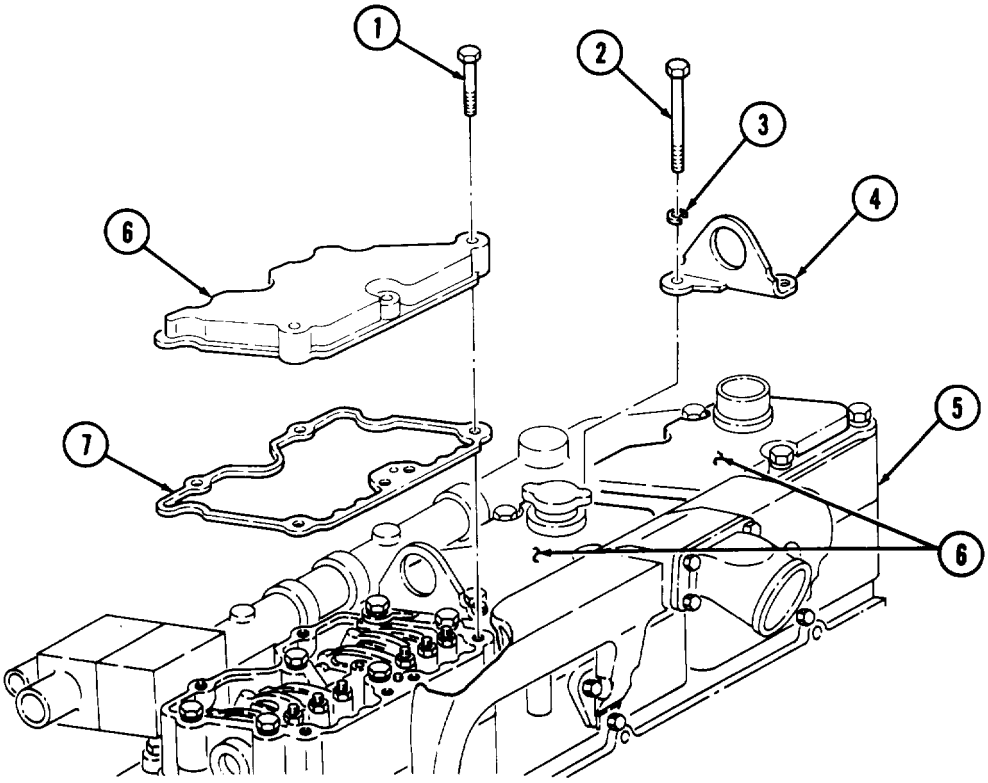

3-37. ROCKER LEVER HOUSINGS AND PUSH TUBES REMOVAL

THIS TASK COVERS:

Removal

INITIAL SETUP

APPLICABLE MODEIS
All

REFERENCES (TM)
TM 9-2320-260-34P-1

TOOLS
General mechanic's tool kit (Appendix B, Item 1)

EQUIPMENT CONDITION
Lifting brackets and rocker lever housing covers removed (para. 3-36).

Removal

NOTE

- All rocker lever housings are removed the same. This procedure covers one rocker lever housing.
- Rocker lever housings are installed with screw-assembled washers on late model engines.

1. Loosen six locknuts (4) and turn out six adjusting screws (3) two turns counterclockwise on six rocker levers (2).
2. Remove five screw-assembled washers (1), radiator bracket (9), rocker lever housing (8), and gasket (7) from cylinder head (6). Discard gasket (7).

CAUTION

Each cylinder has an exhaust push tube, intake push tube, and injector push tube. The injector push tube is the largest and seats in the cam follower socket. It is important that each push tube be tagged so they can be reinstalled in the same location. Failure to do so may result in damage to equipment.

3. Remove six push tubes (5) from cylinder head (6).

NOTE

For disassembly, cleaning, inspection, repair, and assembly of rocker lever housing, refer to para. 3-15.

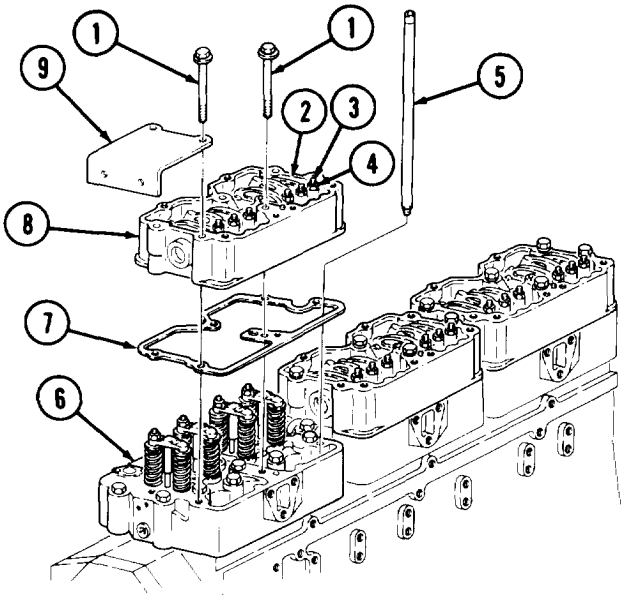

3-38. FUEL CROSSOVER CONNECTORS REMOVAL

THIS TASK COVERS:

Removal

INITIAL SETUP

APPLICABLE MODELS
All

TOOLS
General mechanic's tool kit (Appendix B, Item 1)

MATERIAL.S/PARTS
Cap and plug set (Appendix C, Item 6)

REFERENCES (TM)
TM 9-2320-260-34P-1

EQUIPMENT CONDITION
Engine mounted on repair stand (para. 3-29).

Removal

NOTE

All fuel crossover connectors are removed the same. This procedure covers removal of one fuel crossover connector.

1. Remove four screw-assembled lockwashers (1), fuel crossover connector (2), and four O-rings (5) from cylinder heads (3). Discard screw-assembled lockwashers (1) and O-rings (5).
2. Plug four fuel holes (4) in cylinder heads (3).

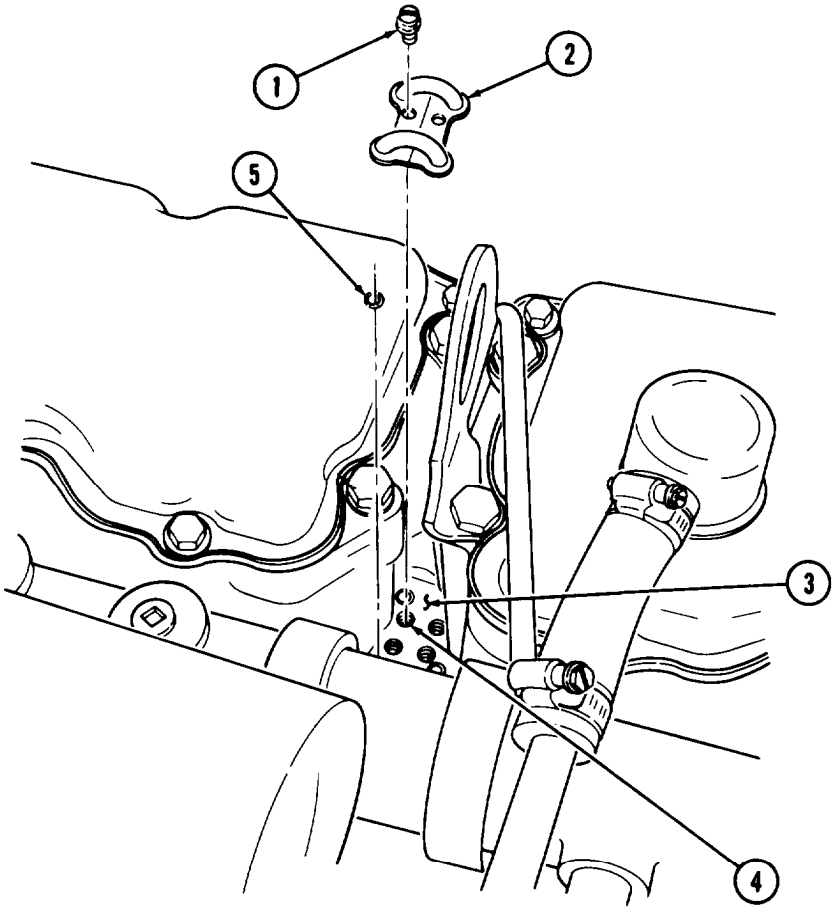

3-39. CROSSHEADS REMOVAL

THIS TASK COVERS:

Removal

INITIAL SETUP

APPLICABLE MODELS
All

REFERENCES (TM)
TM 9-2320-260-34P-1

TOOLS
General mechanic's tool kit (Appendix B, Item 1)

EQUIPMENT CONDITION
Rocker lever housings and push tubes removed (para. 3-37).

Removal

NOTE

All crossheads are removed the same. This procedure is for one crosshead.

Loosen twelve jamnuts (1), turn adjusting screw (2) counterclockwise, and remove crossheads (3) from guides (4).

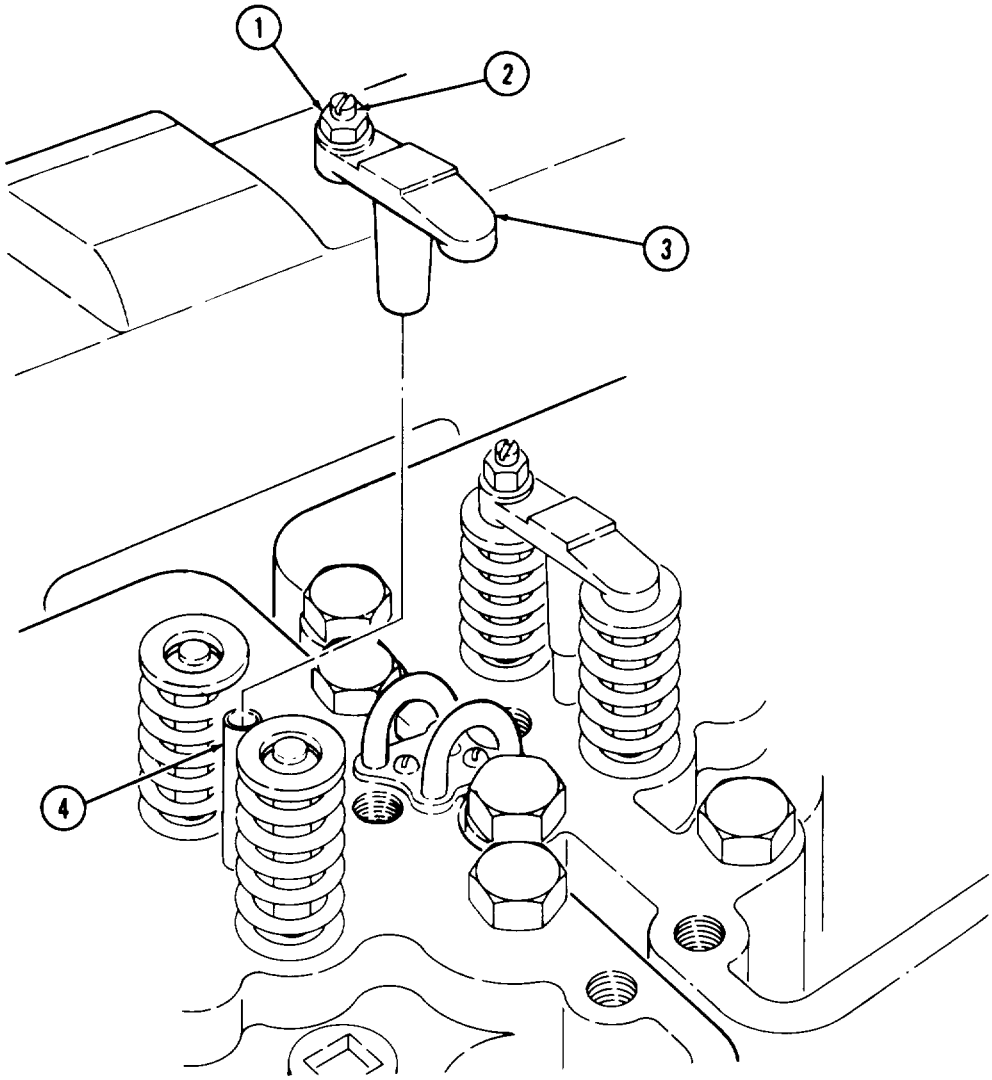

3-40. CYLINDER HEADS REMOVAL

THIS TASK COVERS:

Removal

INITIAL SHOP

APPLICABLE MODELS
All

TOOLS
General mechanic's tool kit (Appendix B, Item 1)

REFERENCES (TM)
TM 9-2320-260-34P-1

EQUIPMENT CONDITION
- Injectors removed (para. 5-6).
- Crossheads removed (para. 3-39).
- Fuel crossover connectors removed (para. 3-38).

Removal

NOTE

- All cylinder heads are removed the same. This procedure is for one cylinder head.
- Tag each cylinder head for installation.

1. Following cylinder head loosening sequence, remove twelve screws (1) and washers (2) from cylinder head (3).
2. Remove cylinder head (3) and gasket (4) from cylinder block (5). Discard gasket (4).

NOTE

For disassembly, cleaning, inspection, repair, and assembly, refer to para. 3-51.

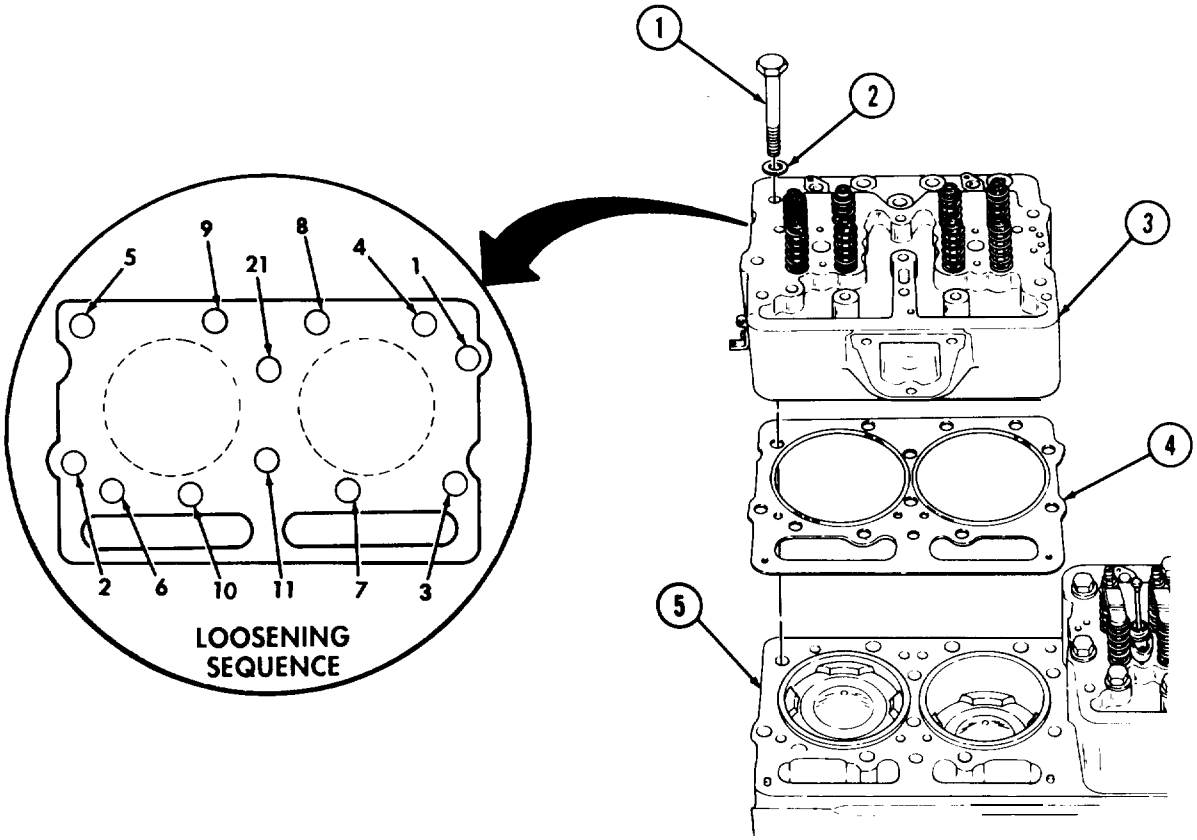

3-41. CAM FOLLOWERS REMOVAL

THIS TASK COVERS:

Removal

INITIAL SETUP

APPLICABLE MODELS
All

TOOLS
General mechanic's tool kit (Appendix B, Item 1)

REFERENCES (TM)
TM 9-2320-260-34P-1

EQUIPMENT CONDITION
- Accessory drive removed (para. 3-32).
- Rocker lever housings and push tubes removed (para. 3-37).

Removal

NOTE

- All cam followers are removed the same. This procedure is for one cam follower.
- Gasket thickness between cam follower housing and cylinder block controls injector timing. Measure and record thickness of each gasket before discarding.

1. Remove six screws (4) from housing (3).
2. Carefully pry housing (3) from two dowels (1) and remove housing (3), gasket (6), and cam follower (5) from cylinder block (2). Measure and record gasket (6) thickness. Discard gasket (6).

NOTE

For disassembly, cleaning, inspection, repair, and assembly, refer to para. 3-19.

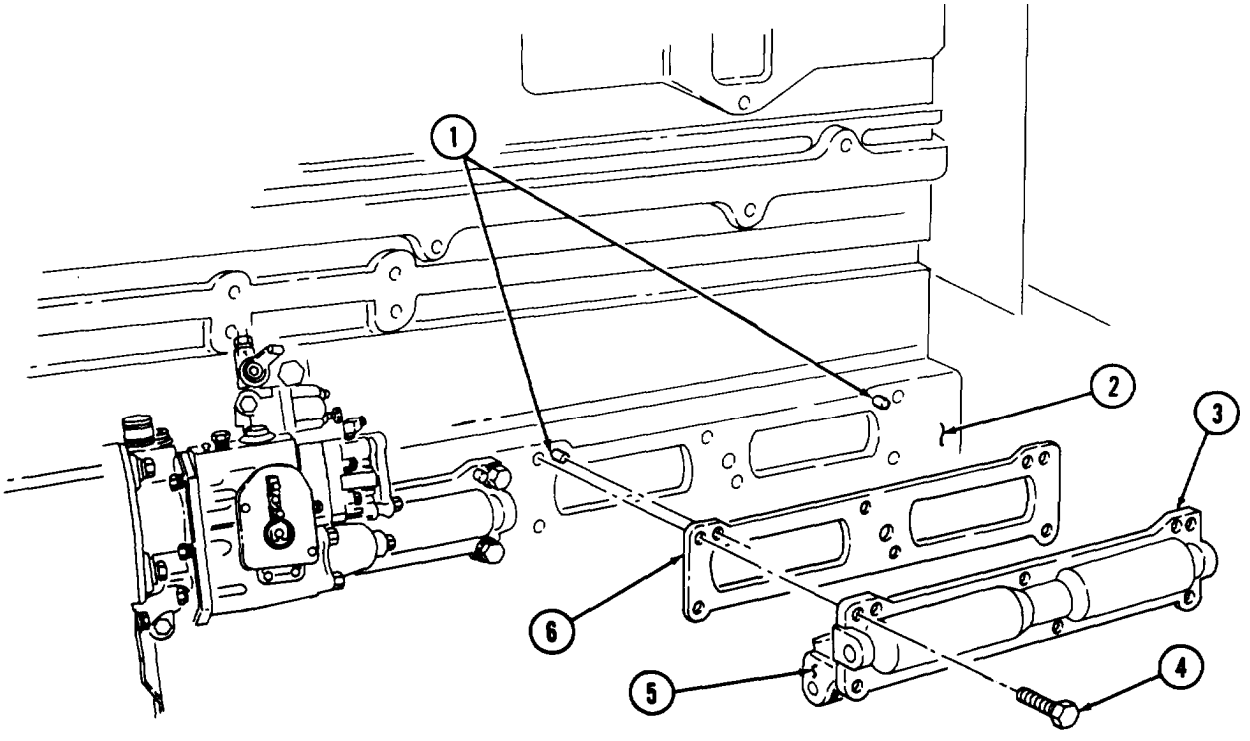

3-42. FLYWHEEL AND CLUTCH REMOVAL

THIS TASK COVERS:

Removal

INITIAL SETUP

APPLICABLE MODELS
All

TOOLS
General mechanic's tool kit (Appendix B, Item 1)
Two dowel pins (Appendix E, Figure E-1)

REFERENCES (TM)
TM 9-2320-260-34P-1

EQUIPMENT CONDITION
Engine mounted on repair stand (para. 3-29).

GENERAL SAFETY INSTRUCTIONS
Flywheel is heavy. Use care when removing flywheel.

Removal

1. Remove twelve screws (8), lockwashers (9), pressure plate (1), and clutch disk (2) from flywheel (5). Discard lockwashers (9).
2. Remove six screws (6) and washers (7) from flywheel (5).
3. Install two dowel pins (10) on crankshaft (3) to support flywheel (5) during removal.

WARNING

Flywheel is heavy. Use care when removing flywheel. Failure to do so may result in injury to personnel.

NOTE

Assistant will help with step 4.

4. Install two screws (11) in flywheel puller holes (4) and tighten screws (11) alternately to push flywheel (5) from crankshaft (3). Lift flywheel (5) from dowel pins (10).
5. Remove two dowel pins (10) from crankshaft (3).
6. Remove two screws (11) from flywheel puller holes (4).

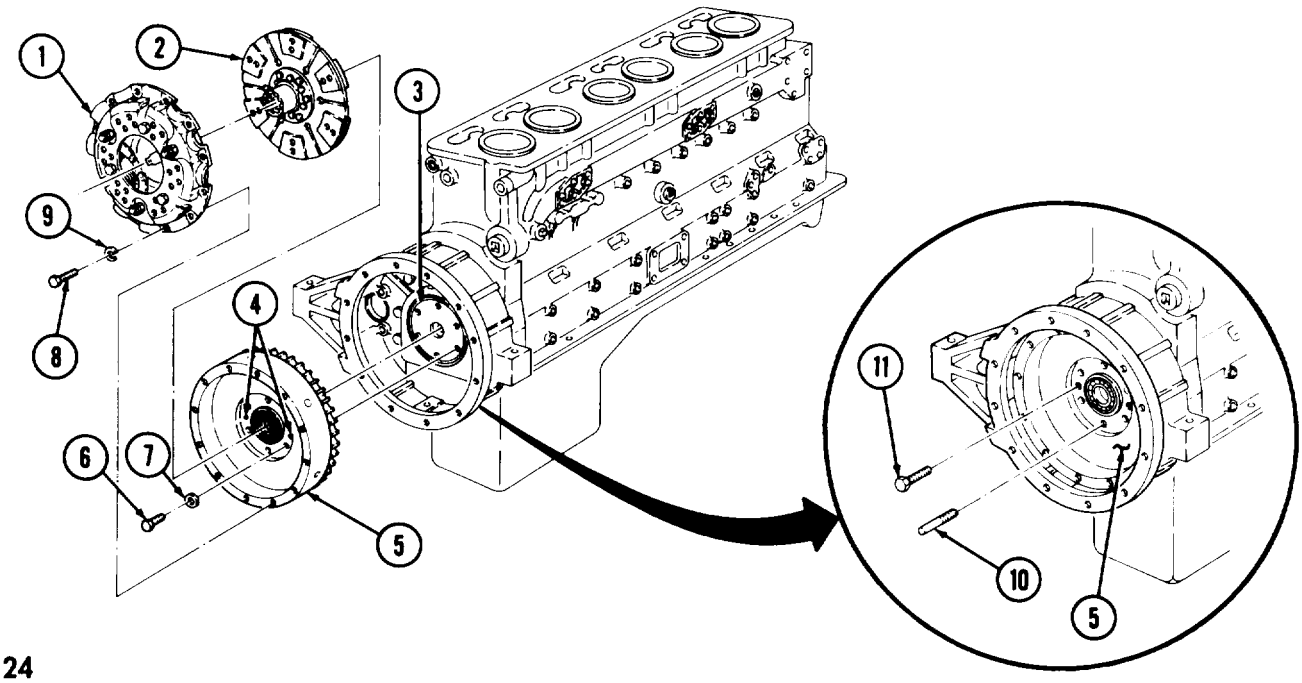

3-43. FLYWHEEL HOUSING REMOVAL

THIS TASK COVERS:

Removal

INITIAL SETUP

APPLICABLE MODELS
All

TOOLS
General mechanic's tool kit (Appendix B, Item 1)
Soft-head hammer (Appendix B, Item 47)

REFERENCES (TM)
TM 9-2320-260-34P-1

EQUIPMENT CONDITION
Flywheel and clutch removed (para. 3-42).

Removal

1. Remove seven screws (8), lockwashers (9), and washers (10) from flywheel housing (4) and oil pan (11). Discard lockwashers (9).
2. Remove nine screws (1), lockwashers (2), washers (3), and preformed packings (12) from flywheel housing (4) and cylinder block (7). Discard lockwashers (2) and preformed packings (12).
3. Using a soft-head hammer, tap flywheel housing (4) from two dowels (5) and remove flywheel housing (4) from cylinder block (7).
4. Remove gasket (6) from flywheel housing (4). Discard gasket (6).
5. Remove pipe plugs (13) and (14) from flywheel housing (4).
6. Remove two screws (17), access cover (16), and gasket (15) from flywheel housing (4). Discard gasket (15).
7. Remove dowels (5) from cylinder block (7) only if dowels (5) are cracked or bent.

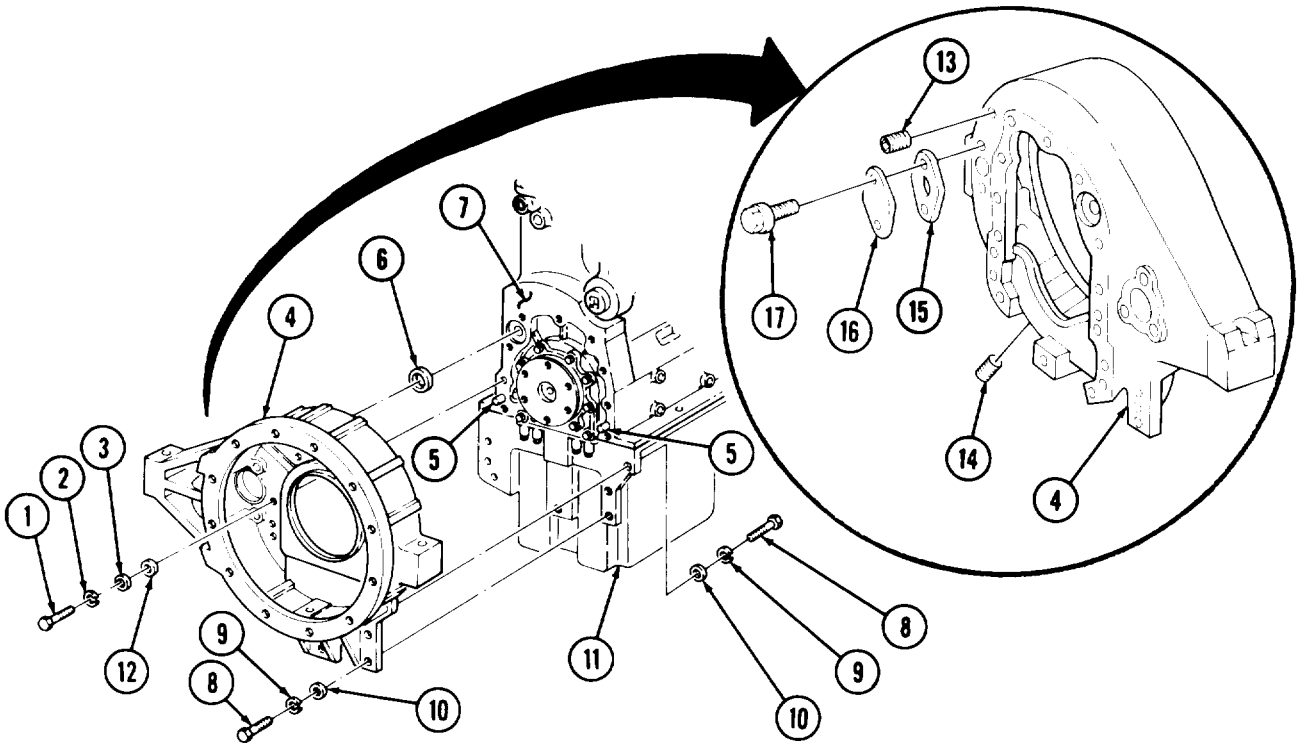

3-44. CAMSHAFT MAINTENANCE

THIS TASK COVERS:

a. Camshaft Gear Backlash Measurement
b. Removal
c. Disassembly
d. Cleaning and Inspection
e. Assembly
f. Camshaft Bushing Removal

INITIAL SETUP

APPLICABLE MODEIS
All

SPECIAL TOOLS
Universal puller kit (Appendix B, Item 75)

TOOLS
General mechanic's tool kit (Appendix B, Item 1)
Outside micrometer (Appendix B, Item 8)
Dial indicator (Appendix B, Item 11)
Cam bushing replacer (Appendix B, Item 86)

MATERIALS/PARTS
Woodruff key (Appendix D, Item **543)**
Antiseize tape (Appendix C, Item 50)

REFERENCES (TM)
TM 9-2320-260-34P-1

EQUIPMENT CONDITION
- Front gear cover removed (para. 3-33).
- Cam follower housing removed (para. 3-41).

a. Camshaft Gear Backlash Measurement

1. Attach dial indicator to cylinder block (1). Ensure plunger is resting on tooth of camshaft gear (2).
2. Rotate camshaft gear (2) clockwise as far as possible without crankshaft gear (3) turning.
3. Set dial indicator to zero.
4. Rotate camshaft gear (2) counterclockwise as far as possible without crankshaft gear (3) turning.
5. Read backlash measurement. Replace camshaft gear (2) (subtask c.) if backlash is greater than 0.020 in. (0.51 mm).
6. Remove dial indicator from cylinder block (1).

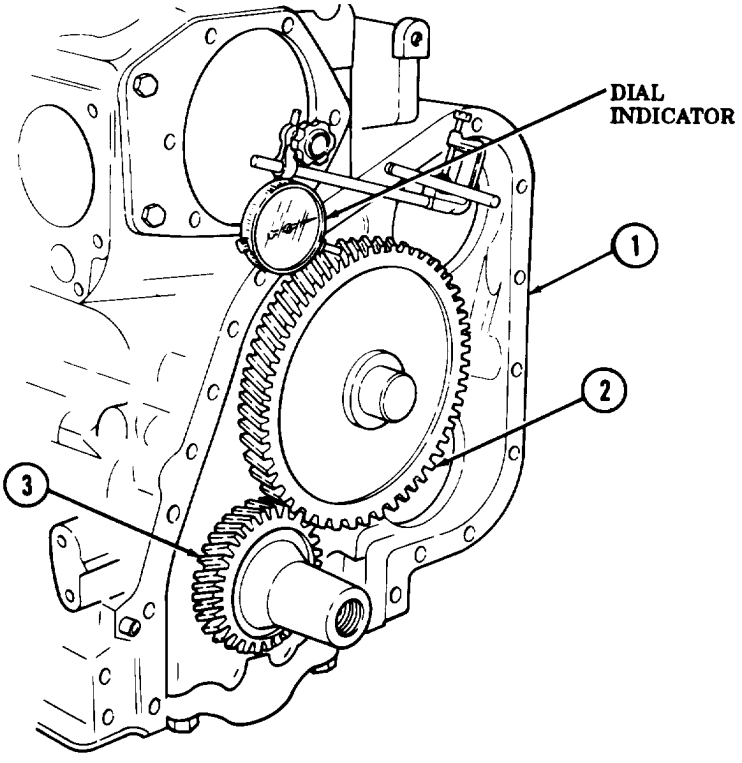

3-44. CAMSHAFT MAINTENANCE (Contd)

b. Removal

CAUTION

Use care when removing camshaft to avoid damage to camshaft and camshaft bearings.

Rotate camshaft gear (2) slightly while pulling camshaft (4) and remove camshaft (4) and thrust washer (6) from cylinder block (1).

c. Disassembly

1. Remove pipe plug (7) from camshaft (4).
2. Using puller, remove camshaft gear (2) from camshaft (4).
3. Remove woodruff key (8) from camshaft (4). Discard woodruff key (8).
4. Remove thrust washer (6) from camshaft (4).

d. Cleaning and Inspection

1. For general cleaning instructions, refer to para. 2-8.
2. For general inspection instructions, refer to para. 2-9.
3. Using micrometer, measure camshaft bearing journals (5). Replace camshaft (4) if bearing journals (5) are less than 1.996 in. (50.70 mm).
4. Using micrometer, measure thrust washer (6). Replace thrust washer (6) if thickness is less than 0.083 in. (2.11 mm).

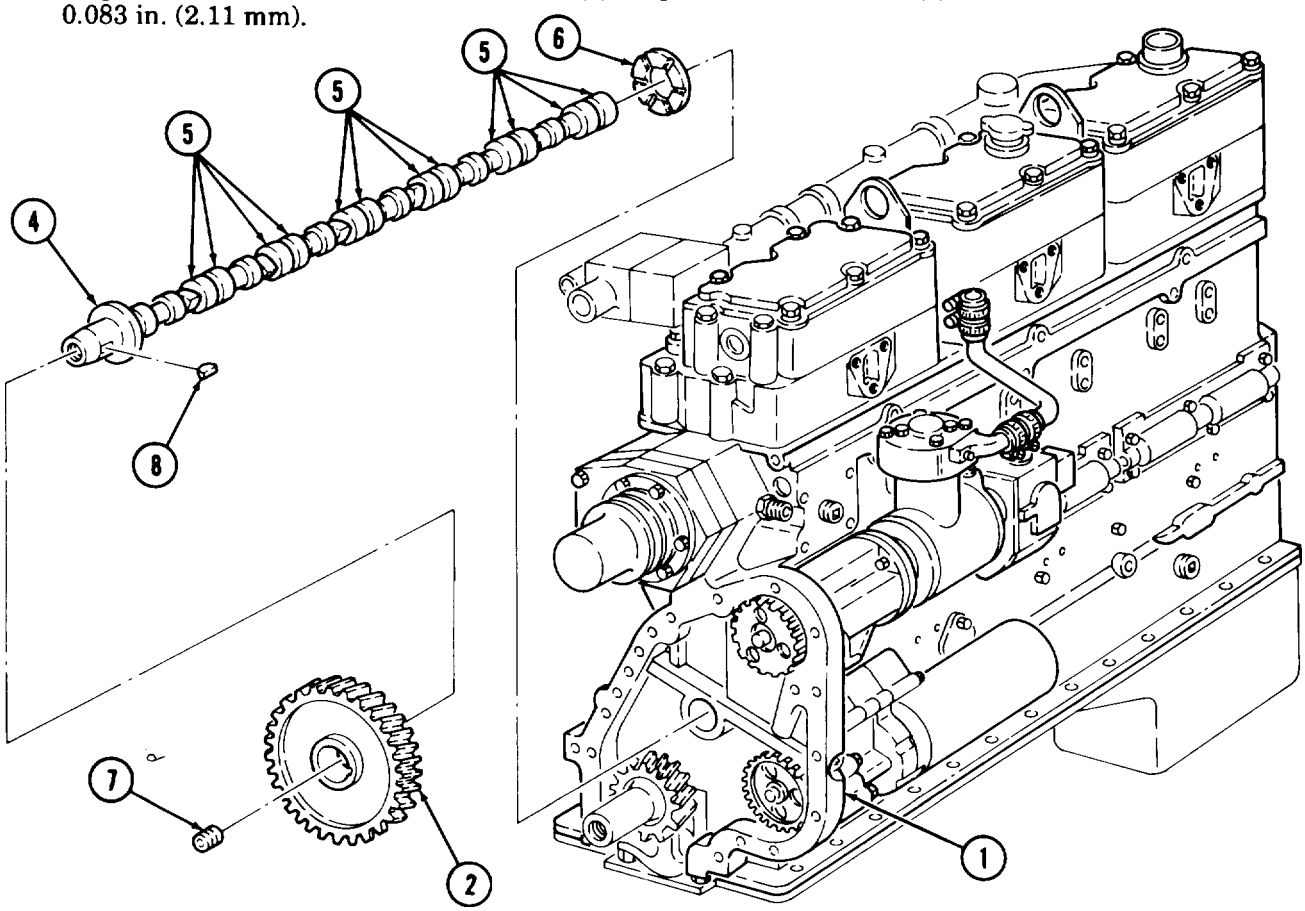

3-44. CAMSHAFT MAINTENANCE (Contd)

e. Assembly

1. Install thrust washer (3) on camshaft (2).
2. Install new woodruff key (4) on camshaft (2).
3. Install camshaft gear (1) on camshaft (2).
4. Wrap threads of pipe plug (5) with antiseize tape and install on cramshaft.

f. Camshaft Bushing Removal

Using cam bushing replacer, remove seven camshaft bushings (6) from camshaft bores (7).

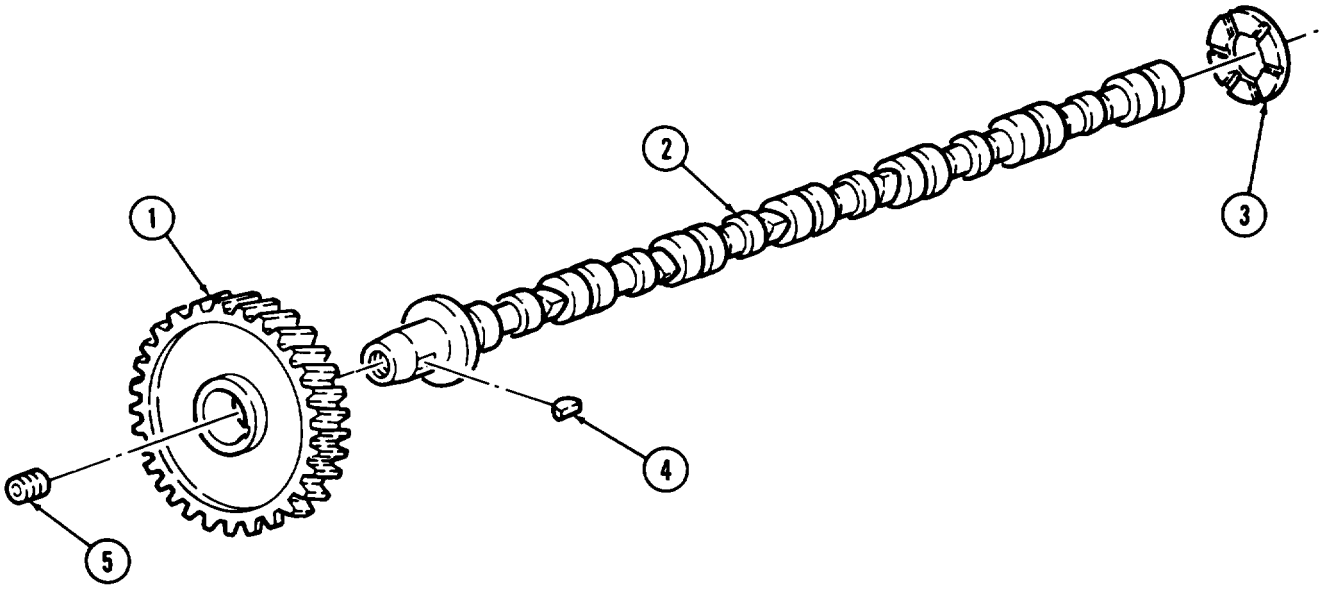

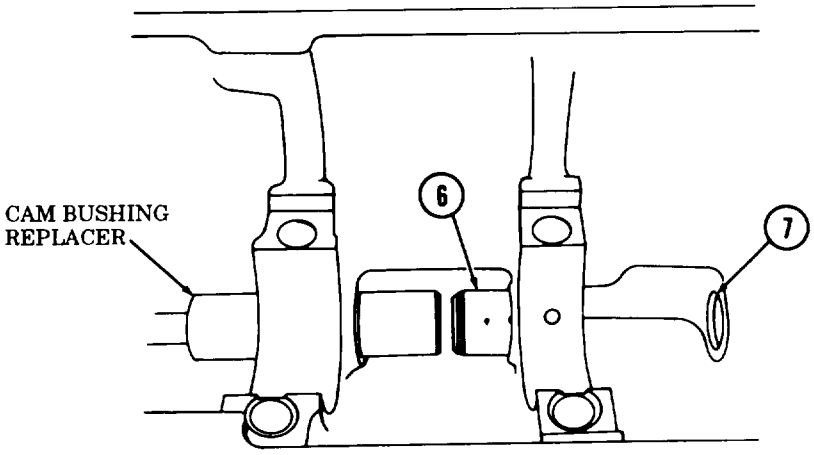

3-45. REAR COVER AND OIL SEAL REMOVAL

THIS TASK COVERS:

Removal

INITIAL SETUP

APPLICABLE MODEIS
All

TOOLS
General mechanic's tool kit (Appendix B, Item 1)

REFERENCES (TM)
TM 9-2320-260-34P-1

EQUIPMENT CONDITION
Flywheel housing removed (para. 3-43).

Removal

1. Remove four screws (5), lockwashers (4), and washers (3) from oil pan (2) and rear cover (9). Discard lockwashers (4).
2. Remove eight screws (8), rear cover (9), and gasket (10) from cylinder block (1). Discard gasket (10).
3. Remove O-ring (7) from rear cover (9). Discard O-ring (7).
4. Remove seal (6) from rear cover (9). Discard seal (6).

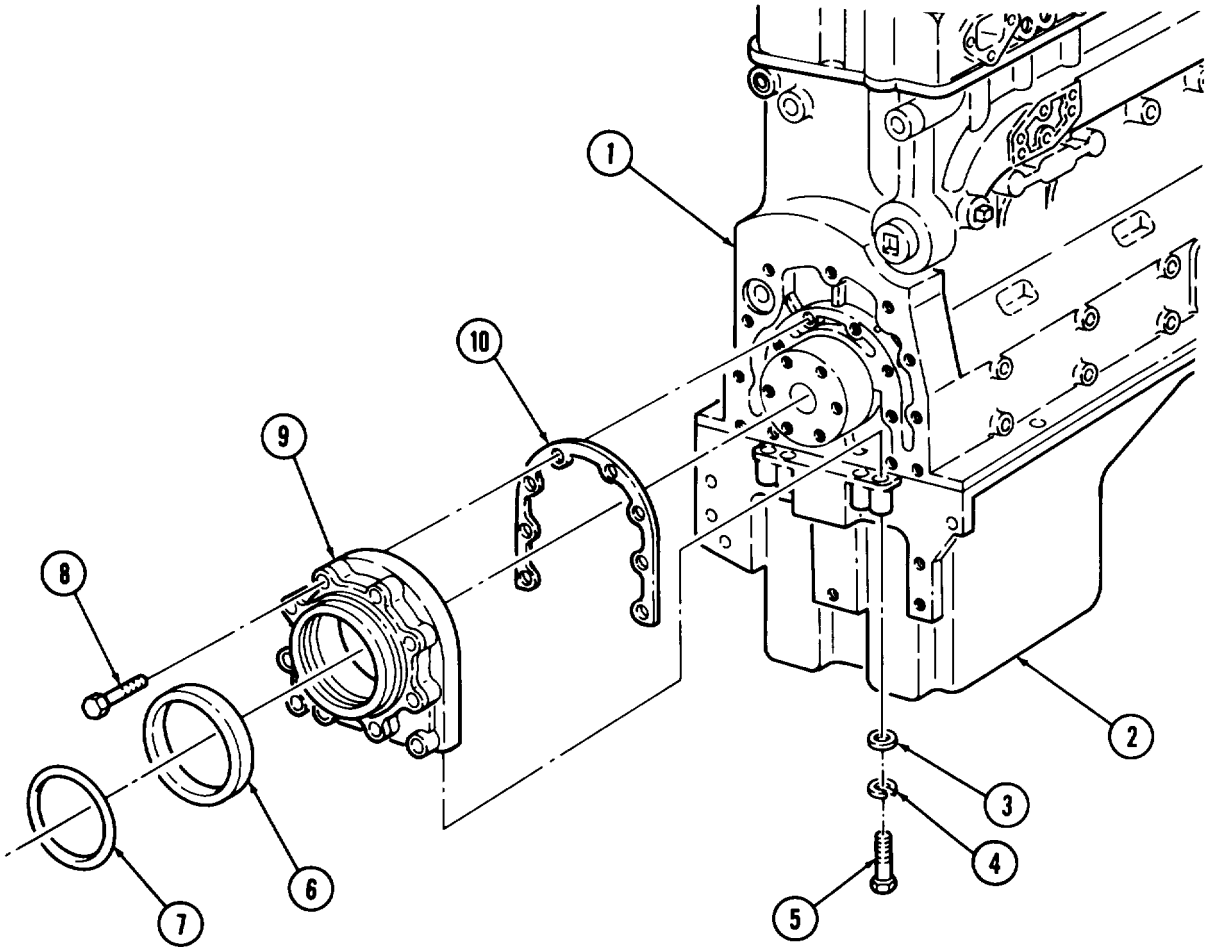

3-46. OIL PAN REMOVAL

THIS TASK COVERS:

Removal

INITIAL SETUP

APPLICABLE MODELS
All

TOOLS
General mechanic's tool kit
(Appendix B, Item 1)

REFERENCES (TM)
TM 9-2320-260-20
TM 9-2320-260-34P-1

EQUIPMENT CONDITION
- Engine mounted on repair stand (para. 3-29).
- Dipstick tube removed (TM 9-2320-260-20).

Removal

1. Rotate cylinder block (14) on repair stand so oil pan (8) faces upward.
2. Remove four screws (1), lockwashers (2), and washers (3) from oil pan (8) and cylinder block (14). Discard lockwashers (2).
3. Remove two screws (6), lockwashers (5), and washers (4) from flywheel housing (20) and oil pan (8). Discard two lockwashers (5).
4. Remove two screws (17), lockwashers (18), and washers (19) from flywheel housing (20) and oil pan **(8).** Discard lockwashers (18).
5. Remove four screws (9), lockwashers (10), and washers (11) from oil pan (8) and cylinder block (14). Discard lockwashers (10).
6. Disconnect oil pickup hose (21) and oil return hose (16) from suction flange (7) and aerator (22).
7. Disconnect front sump tube (15) from scavenger adapter (12).
8. Remove twenty-eight screw-assembled lockwashers (23), two clamps (24), oil pickup hose (21), oil return hose (16), oil pan (8), and gasket (13) from cylinder block (14). Discard gasket (13) and screw-assembled lockwashers (23).

NOTE

For disassembly, cleaning, inspection, and assembly, refer to para. 3-20.

3-46. OIL PAN REMOVAL (Contd)

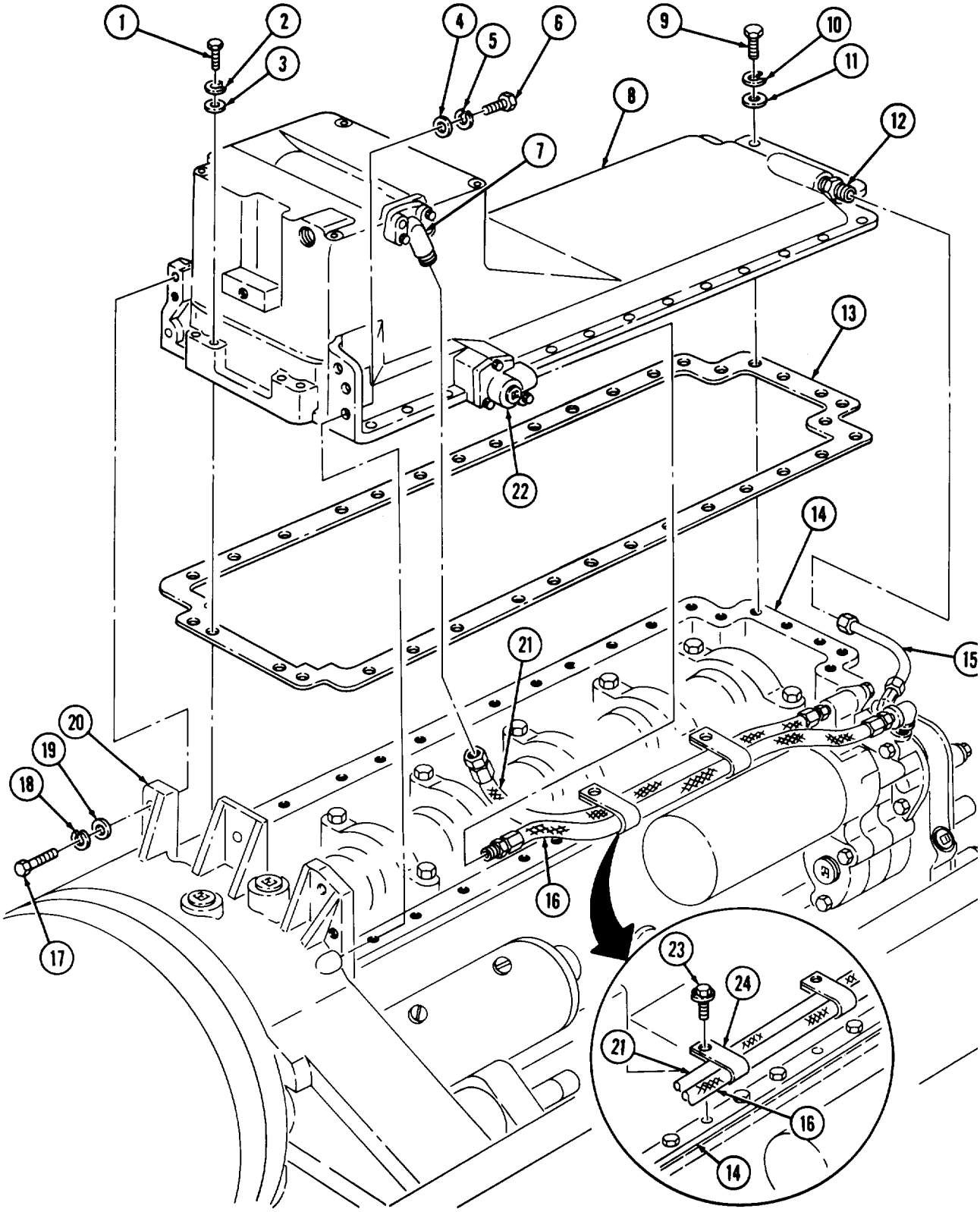

3-47. PISTON AND CONNECTING ROD MAINTENANCE

THIS TASK COVERS:

a. Removal **b. Disassembly**

INITIAL SETUP

APPLICABLE MODELS
All

TOOLS
General mechanic's tool kit (Appendix B, Item 1)
Arbor press (Appendix B, Item 7)
Wire brush (Appendix B, Item 107)
Piston ring expander (Appendix B, Item 114)

MATERIALS/PARTS
Emery cloth (Appendix C, Item 8)

REFERENCES (TM)
TM 9-2320-260-34P-1

EQUIPMENT CONDITION
- Oil pan removed (para. 3-46).
- Cylinder heads removed (para. 3-40).

a. Removal

NOTE

- Clean all carbon from upper inside wall of each cylinder liner with wire brush and emery cloth before removing connecting rods and pistons.
- Connecting rods and pistons are removed the same. This task covers the removal of one connecting rod and piston.

1. Remove two screws (12) and connecting rod cap (11) from connecting rod (6) and crankshaft journal (9).

CAUTION

Connecting rod caps are not interchangeable. Reassemble each connecting rod cap and connecting rod after disassembly. Tape connecting rod bearing shells together and label each pair by cylinder number for installation.

2. Remove bearing shell (10) from connecting rod cap (11).
3. Push connecting rod (6) and piston (2) from cylinder block (13) using hammer handle. Hold piston (2) to prevent damage from falling during removal.
4. Remove bearing shell (8) from connecting rod (6).

NOTE

Mark connecting rods, caps, and pistons with appropriate cylinder number. Mark side of connecting rod and cap facing camshaft.

b. Disassembly

1. Remove piston rings (1) from piston (2). Discard piston rings (1).
2. Remove two retaining rings (3) from piston (2).
3. Using arbor press, remove piston pin (4) from piston (2) and connecting rod (6).
4. Using arbor press, remove piston pin bushing (5) from connecting rod (6). Discard piston pin bushing (5).
5. Remove alinement pin (7) from connecting rod (6).

3-47. PISTON AND CONNECTING ROD MAINTENANCE (Contd)

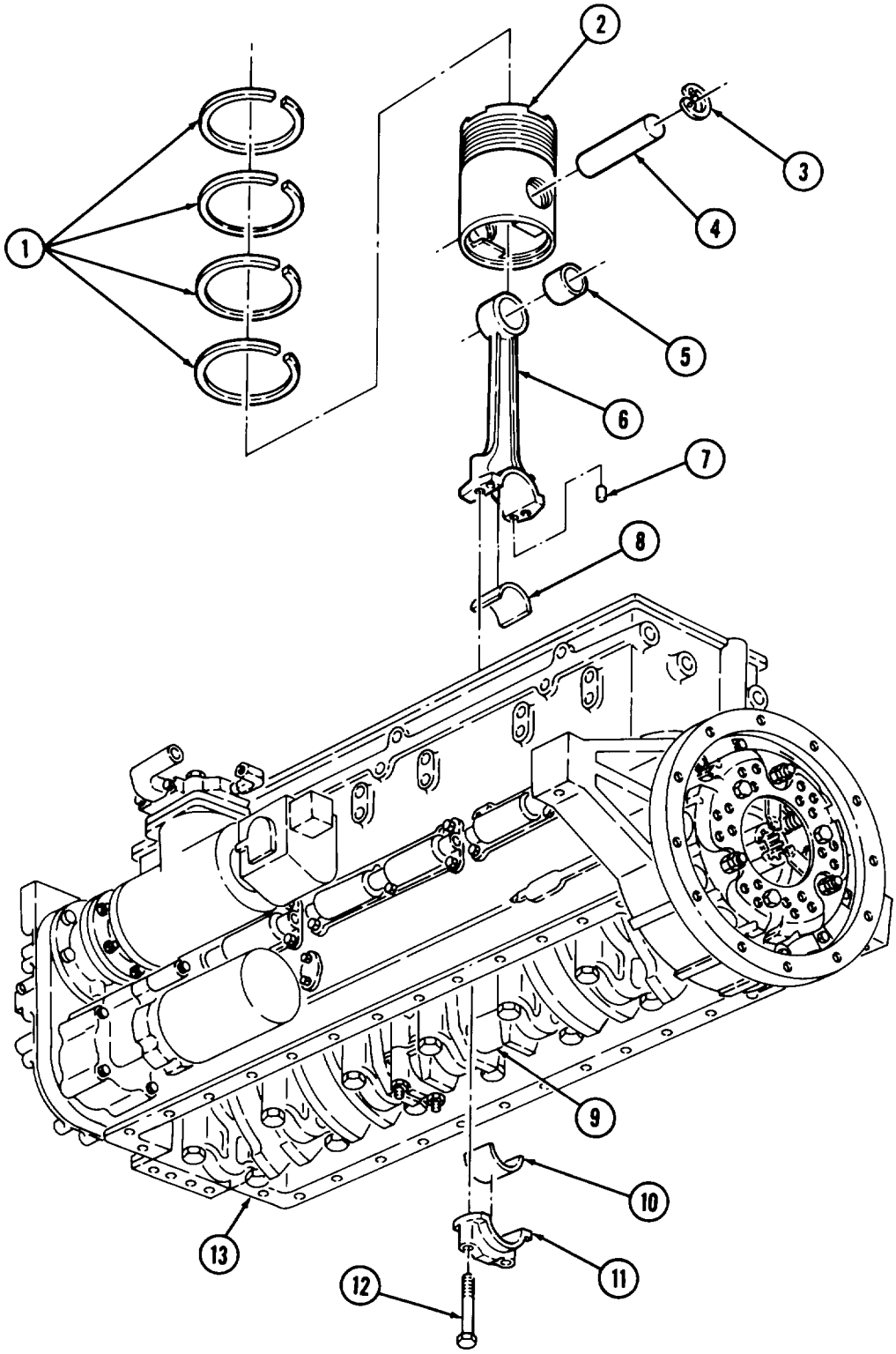

3-48. CRANKSHAFT AND MAIN BEARING REMOVAL

THIS TASK COVERS:

Removal

INITIAL SETUP

APPLICABLE MODELS
All

SPECIAL TOOLS
Universal puller kit (Appendix B, Item 75)

TOOLS
General mechanic's tool kit (Appendix B, Item 1)
Main bearing cap puller (Appendix B, Item 92)
Lifting straps (Appendix B, Item 155)
Lifting device

REFERENCES (TM)
TM 9-2320-260-34P-1

EQUIPMENT CONDITION
- Pistons and connecting rods removed (para. 3-47).
- Front gear cover removed (para. 3-33).

Removal

1. Bend down fourteen locktabs (2) and remove fourteen screws (1) and locktabs (2) from seven main bearing caps (10). Discard locktabs (2).

NOTE

- Main bearing caps are not interchangeable. Ensure all caps are marked for replacement in their original positions.
- Tape mating main bearing shells and thrust ring halves together and label each pair by cylinder number for later reference.

2. Using main bearing cap puller, pull seven main bearing caps (10) from cylinder block (8) and crankshaft (5).
3. Remove seven bearing shells (3) and two thrust ring halves (4) from crankshaft (5).
4. Using lifting device and lifting straps, remove crankshaft (5) from cylinder block (8).
5. Remove seven bearing shells (7) and two thrust ring halves (6) from cylinder block (8).
6. Remove seven ring dowels (9) from cylinder block (8).

NOTE

Perform step 7 and 8 only if crankshaft gear is damaged or excessively worn.

7. Using puller, remove gear (11) from crankshaft (5).
8. Remove woodruff key (12) from crankshaft (5). Discard woodruff key (12).

3-48. CRANKSHAFT AND MAIN BEARING REMOVAL (Contd)

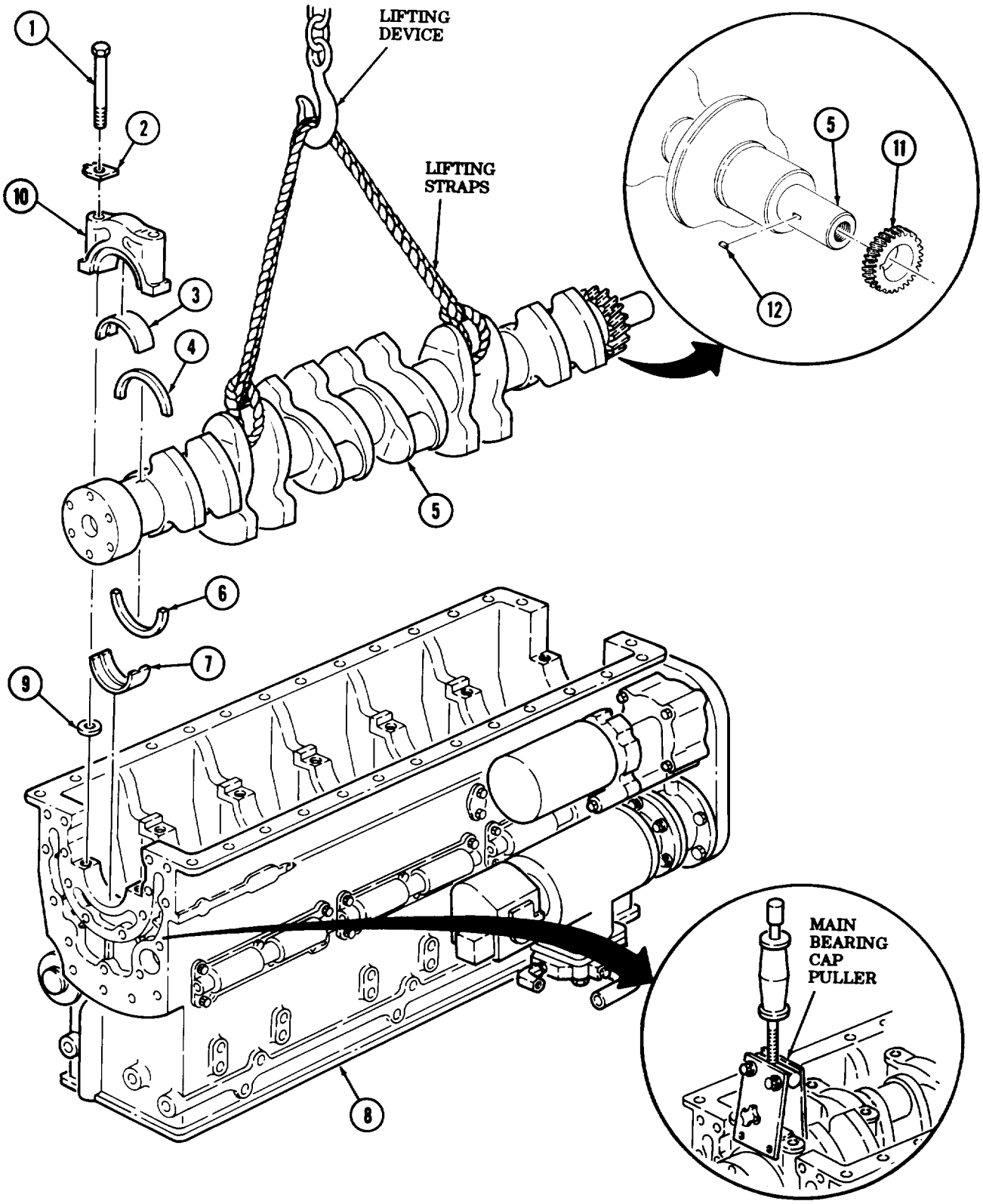

Section V. ENGINE REPAIR

3-49. ENGINE REPAIR MAINTENANCE INDEX

PARA. NO.	TITLE	PAGE NO.
3-50.	Cylinder Liners and Cylinder Block Maintenance	3-136
3-51.	Cylinder Head Repair	3-149
3-52.	Oil Pump Repair	3-168

3-50. CYLINDER LINERS AND CYLINDER BLOCK MAINTENANCE

THIS TASK COVERS:

a. Removal
b. Disassembly
c. Cleaning and Inspection
d. Assembly
e. Installation

INITIAL SETUP

APPLICABLE MODELS
All

TEST EQUIPMENT
Magnetic tester (Appendix B, Item 70)

TOOLS
General mechanic's tool kit (Appendix B, Item 1)
Cylinder liner puller (Appendix B, Item 76)
Cylinder liner driver (Appendix B, Item 77)
Cylinder liner clamp set (Appendix B, Item 13)
Gage block (Appendix B, Item 78)
Brush (Appendix B, Item 71)
Inside micrometer (Appendix B, Item 9)
Outside micrometer (Appendix B, Item 8)
Telescoping gage set (Appendix B, Item 74)
Depth micrometer (Appendix B, Item 16)

MATERIALS/PARTS
Cylinder liner packing set (Appendix D. Item 481)
Two expansion plugs (Appendix D, Item 323)

MATERIAIS/PARTS (Contd)
Liner shim set (Appendix D, Item 482)
Two lockwashers (Appendix D, Item 215)
Flange gasket (Appendix D, Item 65)
Detergent (Appendix C, Item 12)
Drycleaning solvent (Appendix C, Item 48)
Lubricating oil (Appendix C, Item 21)
Rags (Appendix C, Item 32)
Antiseize tape (Appendix C, Item 50)

REFERENCES (TM)
TM 9-2320-260-34P-1

EQUIPMENT CONDITION
Crankshaft and main bearing removed (para. 3-48).

GENERAL SAFETY INSTRUCTIONS
- Compressed air source will not exceed 30 psi (207 kPa).
- Eyeshields must be worn when cleaning with compressed air.
- Keep fire extinguisher nearby when using drycleaning solvent.

NOTE

- All six cylinder liners are removed the same. This procedure covers one cylinder liner.
- Tag all cylinder liners for installation.

a. Removal

Using cylinder liner puller, remove cylinder liner (1) from cylinder liner bore (2).

3-50. CYLINDER LINERS AND CYLINDER BLOCK MAINTENANCE (Contd)

b. Disassembly

NOTE

All six cylinder liners are disassembled the same. This procedure covers one cylinder liner.

1. Remove red O-ring (6), black O-ring (5), and crevice seal (4) from cylinder liner (1). Discard O-rings (6) and (5) and crevice seal (4).
2. Remove shim pack (3) from cylinder liner (1).

NOTE

- Tag cylinder liners and shim packs for installation into correct cylinder bore.
- Tag all cylinder liners with mating cylinder bore number for installation.

3. Place cylinder liner (1) and shim pack (3) on numbered rack.

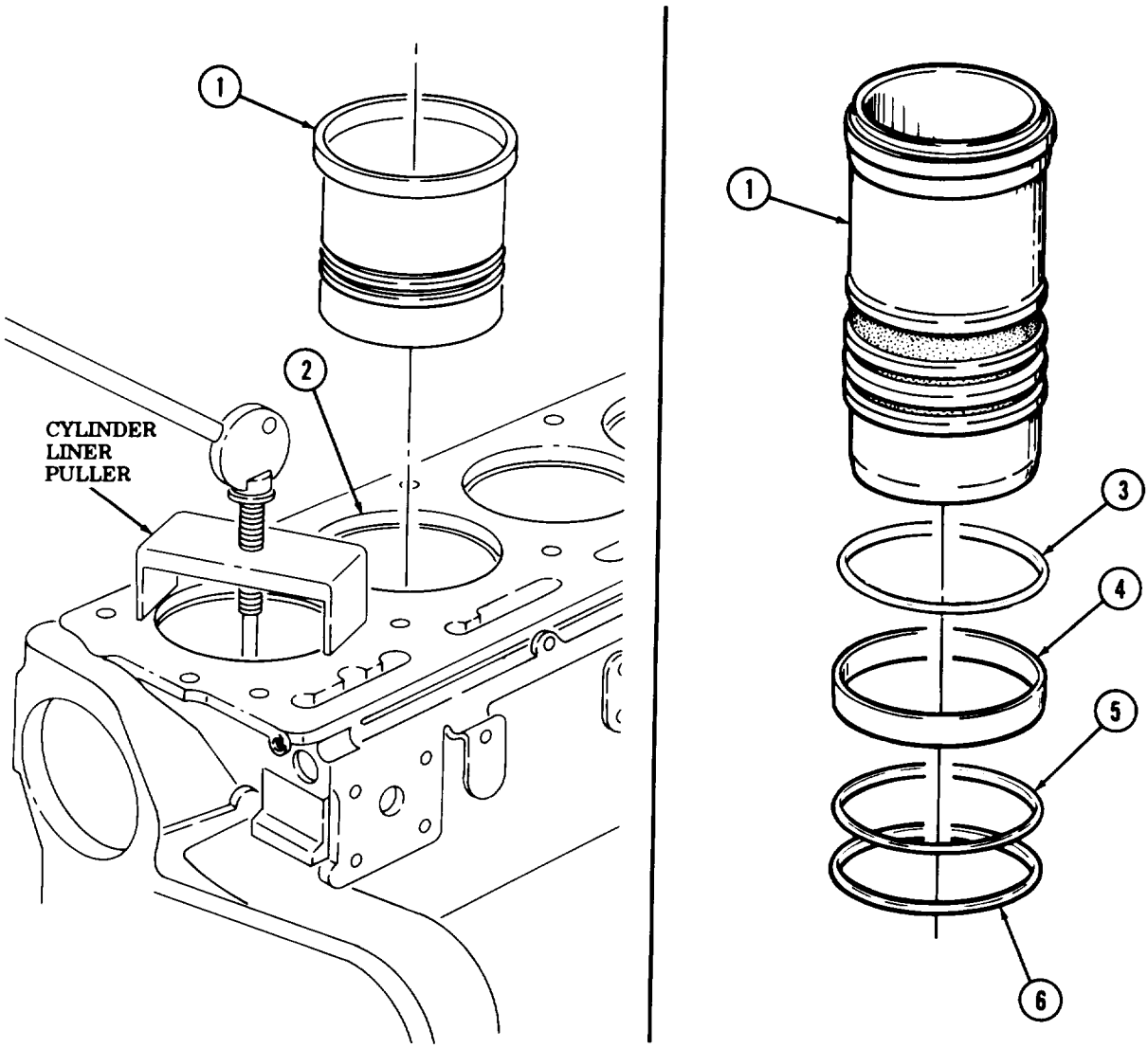

3-50. CYLINDER LINERS AND CYLINDER BLOCK MAINTENANCE (Contd)

4. Remove pipe plugs (2) and (3) and expansion plugs (4) and (6) from cylinder block (1), Discard expansion plugs (4) and (16).
5. Remove eight pipe plugs (5) from cylinder block (1).
6. Remove two screws (9), lockwashers (8), flange (7), and gasket (6) from cylinder block (1). Discard lockwashers (8) and gasket (6).
7. Remove pipe plugs (10) and (11) and washer (12) from cylinder block (1).
8. Remove three pipe plugs (13) from cylinder block (1).
9. Remove five pipe plugs (14) from cylinder block (1).
10. Remove pipe plug (15) from cylinder block (1).

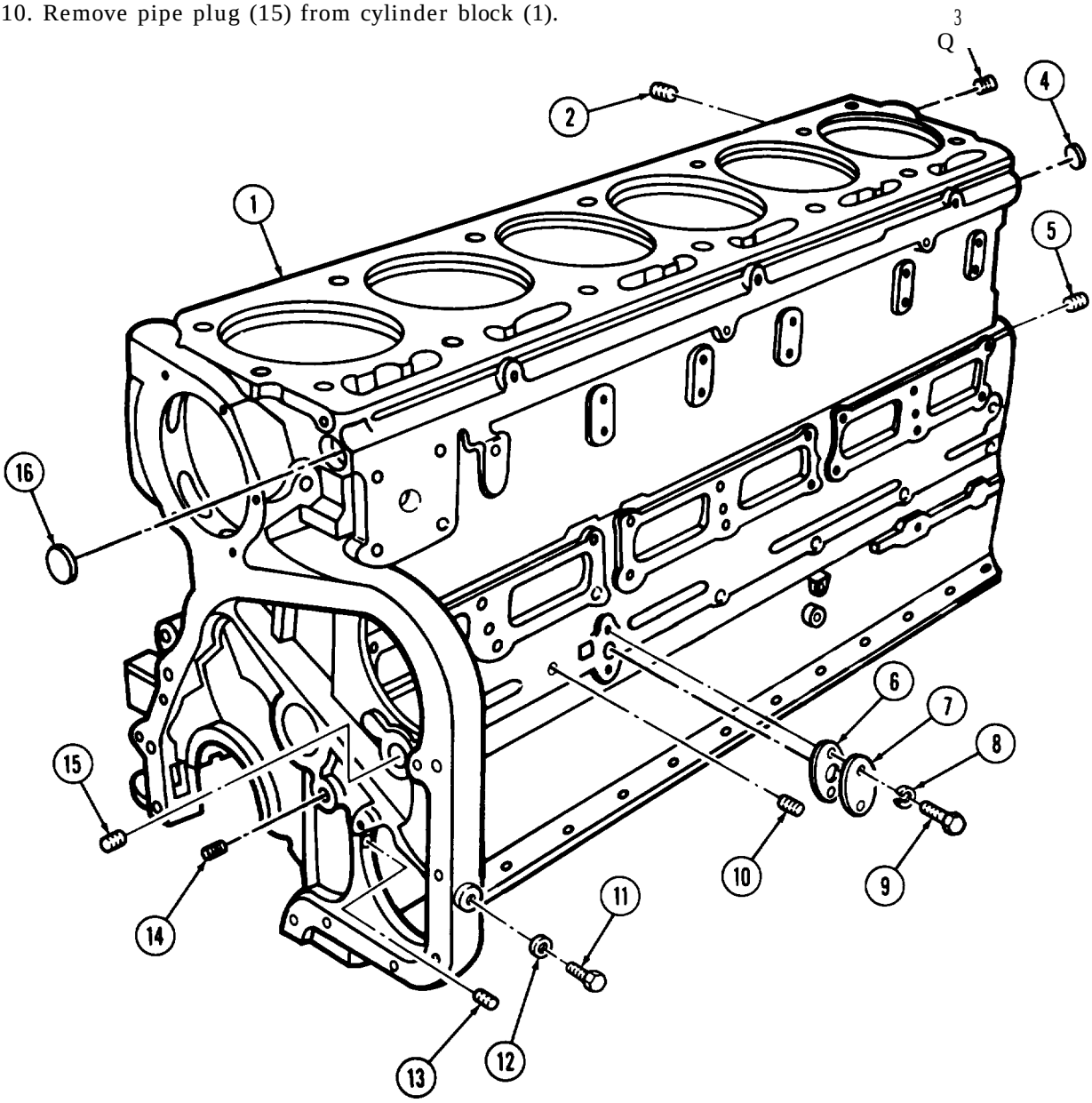

3-50. CYLINDER LINERS AND CYLINDER BLOCK MAINTENANCE (Contd)

c. Cleaning and Inspection

WARNING

Drycleaning solvent is flammable and will not be used near open flame. Use only in well-ventilated places. Failure to do so may result in injury to personnel.

1. For general cleaning instructions, refer to para. 2-8.
2. Using brushes, clean all oil passages (17).

WARNING

Compressed air source will not exceed 30 psi (207 kPa). When cleaning with compressed air, eyeshields must be worn. Failure to wear eyeshields may result in injury to personnel.

3. Clean all oil passages (17) with compressed air.

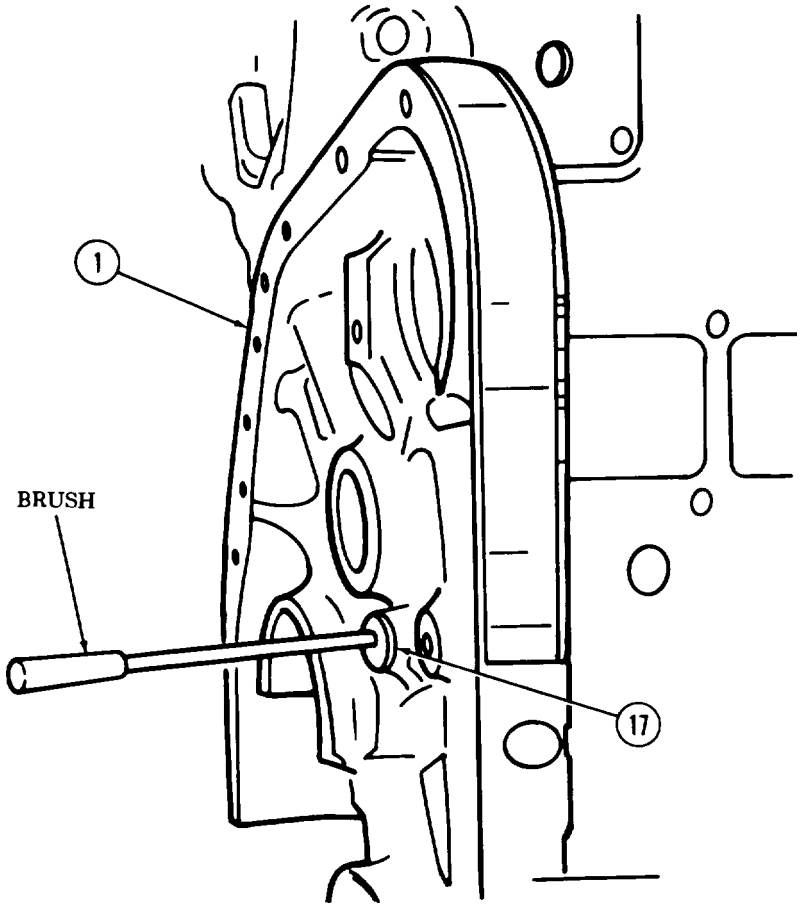

3-50. CYLINDER LINERS AND CYLINDER BLOCK MAINTENANCE (Contd)

WARNING

Compressed air source will not exceed 30 psi (207 kPa). When cleaning with compressed air, eyeshields must be worn. Failure to wear eyeshields may result in injury to personnel.

4. Clean water pump air bleed hole (1) in number one cylinder bore (2) with compressed air.
5. Blow all dirt and drycleaning solvent from screw holes (4) with compressed air.
6. Remove scale from liner counterbore ledge (3).
7. Clean carbon from lower liner bore (5).

NOTE

Cylinder block must be on flat surface or work bench for inspection.

8. Inspect cylinder block (7) (para. 2-9) for worn surfaces, pitting, corrosion, nicks, gouges, burrs, eroded water holes, damaged threads, distortion, and cracked areas. Replace cylinder block (7) if worn, pitted, corroded, or cracked.

NOTE

Ensure counterbore ledge is 90° to liner bore.

9. Measure counterbore (6) depth and diameter. Counterbore (6) diameter must be 6.5615-6.5635 in. (166.66-166.71 mm) (dimension “A”). Counterbore (6) depth must be 0.350-0.352 in. (8.89-8.94 mm) (dimension “B”). Replace cylinder block (7) or notify your supervisor for refinishing if depth or diameter exceeds limits.
10. Position telescoping gage on inner rim of counterbore (6).
11. Move gage around circumference of counterbore (6) taking readings at three intervals of 120°. The difference in readings is the distortion. If the distortion is greater than 0.0014 in. (0.0356 mm), replace cylinder block (7) or notify your supervisor for machining.
12. Using depth micrometer, measure counterbore (6) depth in several places. The difference in readings is the distortion. If the distortion is greater than 0.001 in. (0.025 mm), replace cylinder block (7) or notify your supervisor for machining,
13. Inspect counterbore (6) for flat, level surface. If counterbore (6) slants downward toward center of cylinder liner (2), replace cylinder block (7) or notify your supervisor for machining.

NOTE

- Cylinder liners must protrude 0.003-0.006 in. (0.076-0.152 mm) above cylinder block.
- Shims are used to compensate for counterbore depth wear.

14. Using outside micrometer, measure outside flange (10) of cylinder liner (8). Do not include bead (9) in measurement. Record measurement.
15. Using gage block, measure depth of counterbore ledge (3). Record measurement.
16. Subtract measurement of counterbore ledge (3) from measurement of outside flange (10). Determine shim thickness necessary to obtain 0.003-0.006 in. (0.076-0.152 mm) protrusion of cylinder liner (8). Record shim thickness.

3-50. CYLINDER LINERS AND CYLINDER BLOCK MAINTENANCE (Contd)

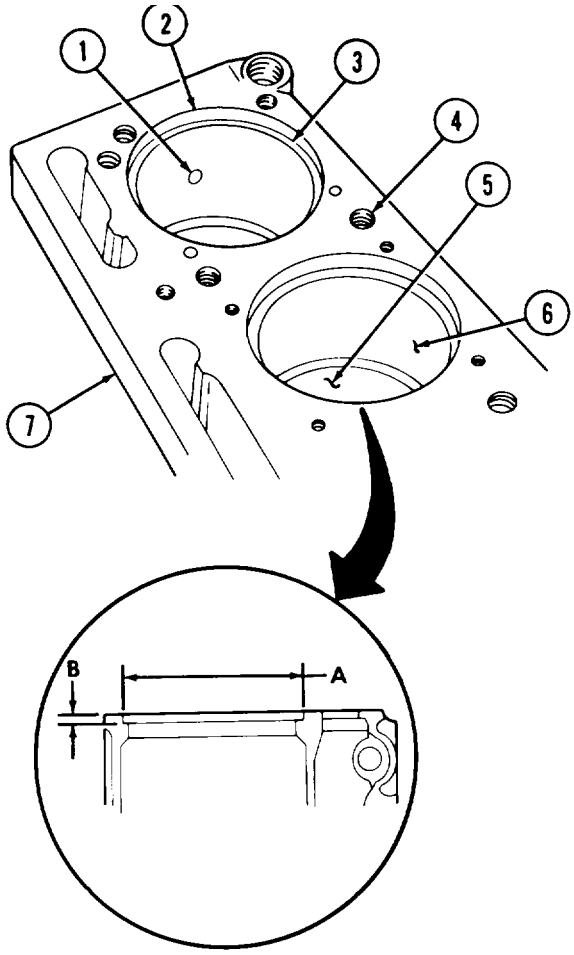

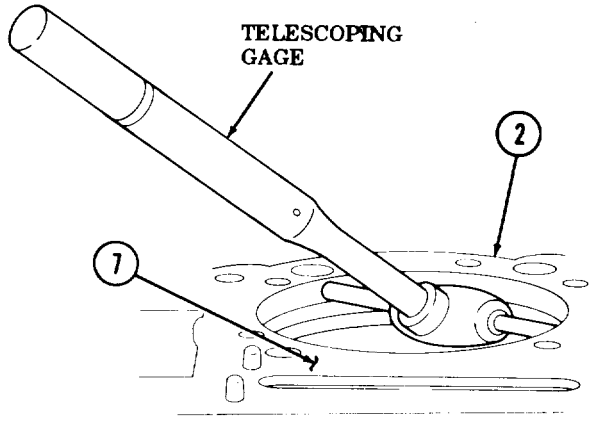

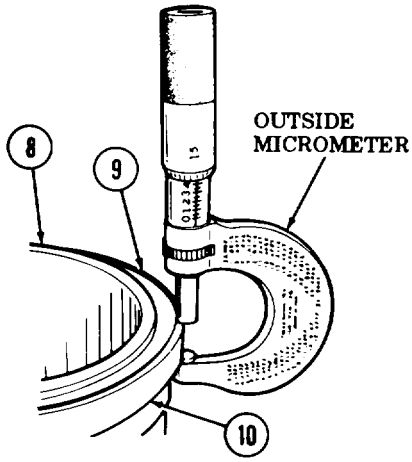

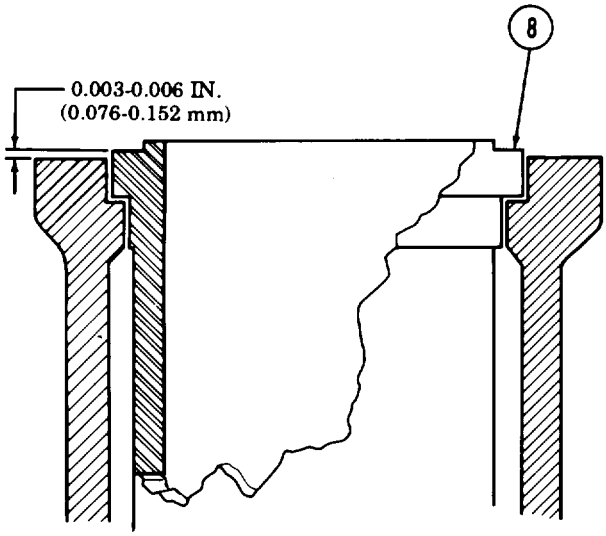

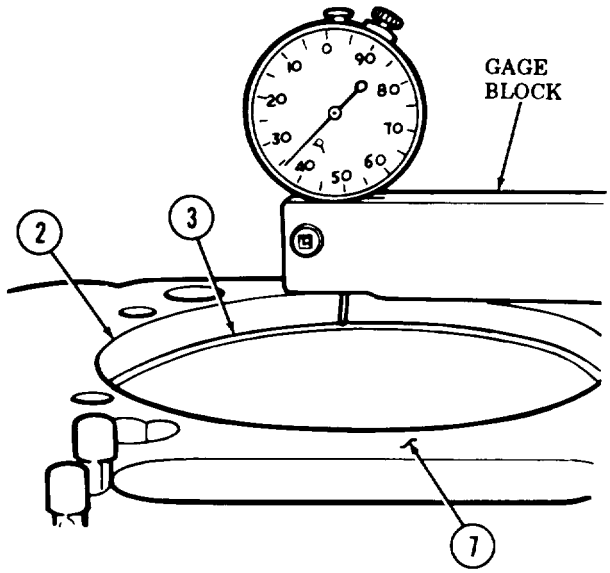

3-50. CYLINDER LINERS AND CYLINDER BLOCK MAINTENANCE (Contd)

17. Install cylinder liner (2) in cylinder block (1).
18. Install clamps (5) on cylinder block (1) with two washers (4) and cylinder head screws (3). Tighten cylinder head screws (3) 50 lb-ft (68 N•m).
19. Measure clearance between lower cylinder liner (2) and cylinder block (1) with feeler gage. Clearance should be 0.002-0.006 in. (0.051-0.152 mm). If clearance exceeds limits, remove cylinder liner (2) and replace cylinder block (1) or notify your supervisor for machining.
20. Remove two cylinder head screws (3), washers (4), and clamps (5) from cylinder block (1).
21. Remove cylinder liner (2) from cylinder block (1).
22. Using telescoping gage, measure lower inside diameter of cylinder liner (2). Inside diameter should be 6.124-6.126 in. (155.55-155.60 mm). If inside diameter is not within limits, replace cylinder block (1) or notify your supervisor for machining.
23. Install main bearing caps (6) on cylinder block (1) without crankshaft or bearing shells (para. 3-48).
24. Using telescoping gage, measure inside diameter of main bearing bore (7) horizontally, vertically, and diagonally. Main bearing bore (7) diameter should not exceed 4.75 in. (120.65 mm).
25. If main bearing bore (7) diameter exceeds 4.75 in. (120.65 mm), replace main bearing cap (6) and remeasure inside diameter of main bearing bore (7). If measurement still exceeds 4.75 in. (120.65 mm), replace cylinder block (1).
26. Remove main bearing caps (6) from cylinder block (1) (para. 3-48).

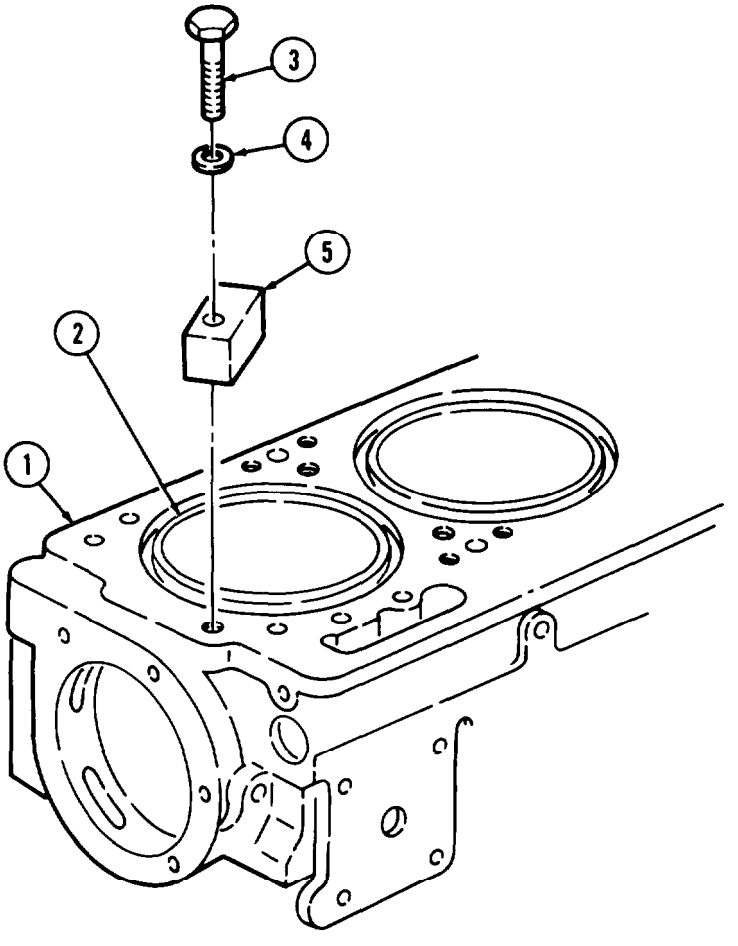

3-50. CYLINDER LINERS AND CYLINDER BLOCK MAINTENANCE (Contd)

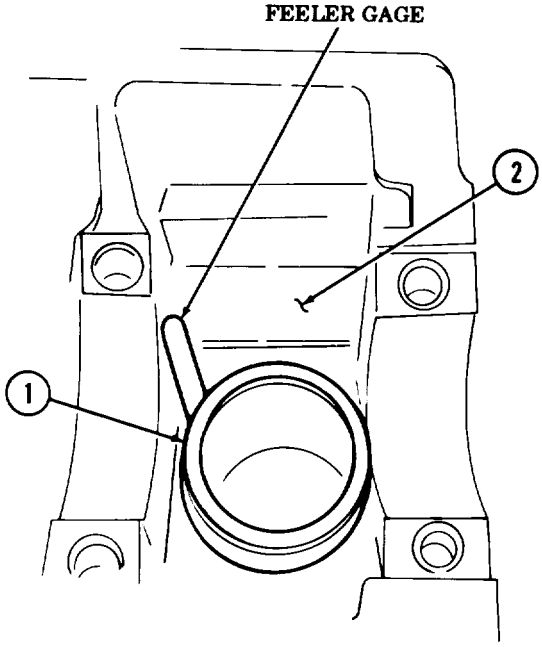

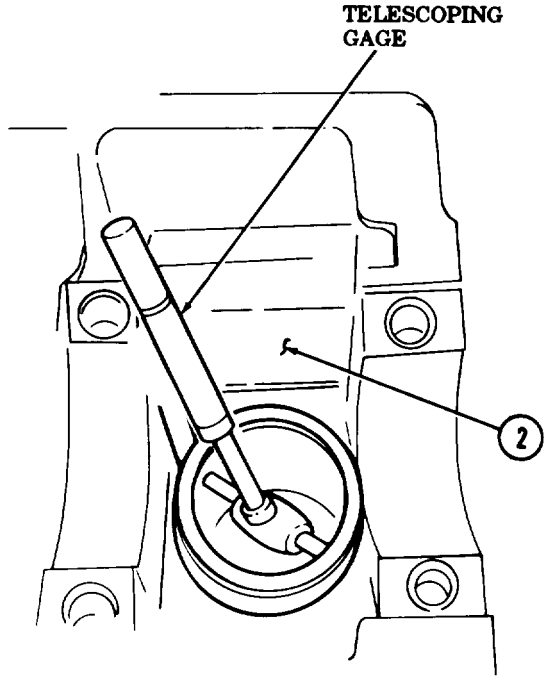

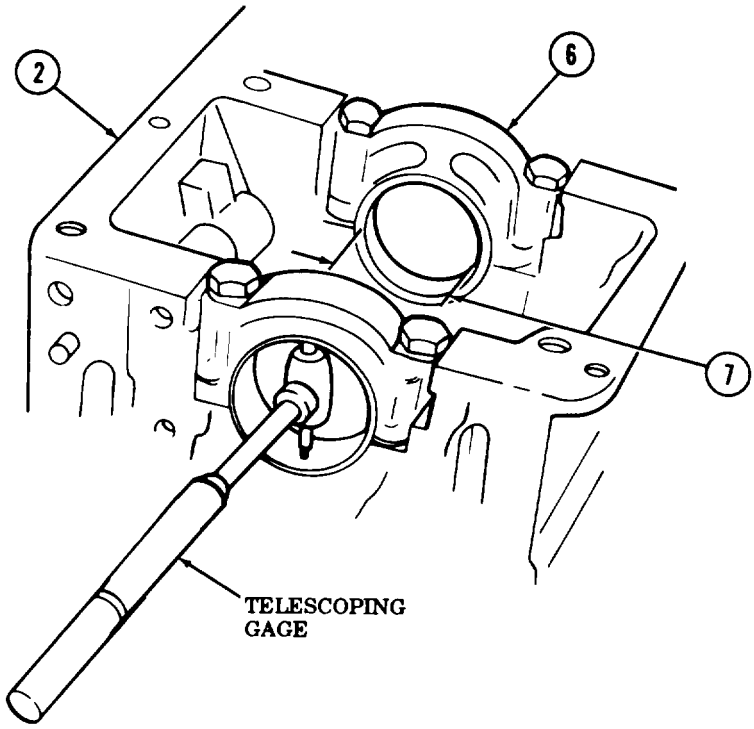

3-50. CYLINDER LINERS AND CYLINDER BLOCK MAINTENANCE (Contd)

NOTE

Pipe plugs, cap plugs, and suction flange plate are installed at this time to keep passages clean. Wrap male pipe threads with antiseize tape to prevent leakage.

27. Install pipe plugs (2), (3), and new expansion plugs (4) and (16) on cylinder block (1). Tighten pipe plugs (2) and (3) 45-55 lb-ft (61-75 N•m).
28. Install eight pipe plugs (5) on cylinder block (1).
29. Install new gasket (6), and flange (7) on cylinder block (1) with two new lockwashers (8) and screws (9).
30. Install washer (12) and pipe plugs (11) and (10) on cylinder block (1).
31. Install three pipe plugs (13) on cylinder block (1). Tighten pipe plug (13) 15-20 lb-ft (20-27 N•m).
32. Install five pipe plugs (14) on cylinder block (1). Tighten pipe plugs (14) 35-45 lb-ft (47-61 N•m).
33. Install pipe plug (15) on cylinder block (1). Tighten pipe plug (15) 15-20 lb-ft (20-27 N-m).

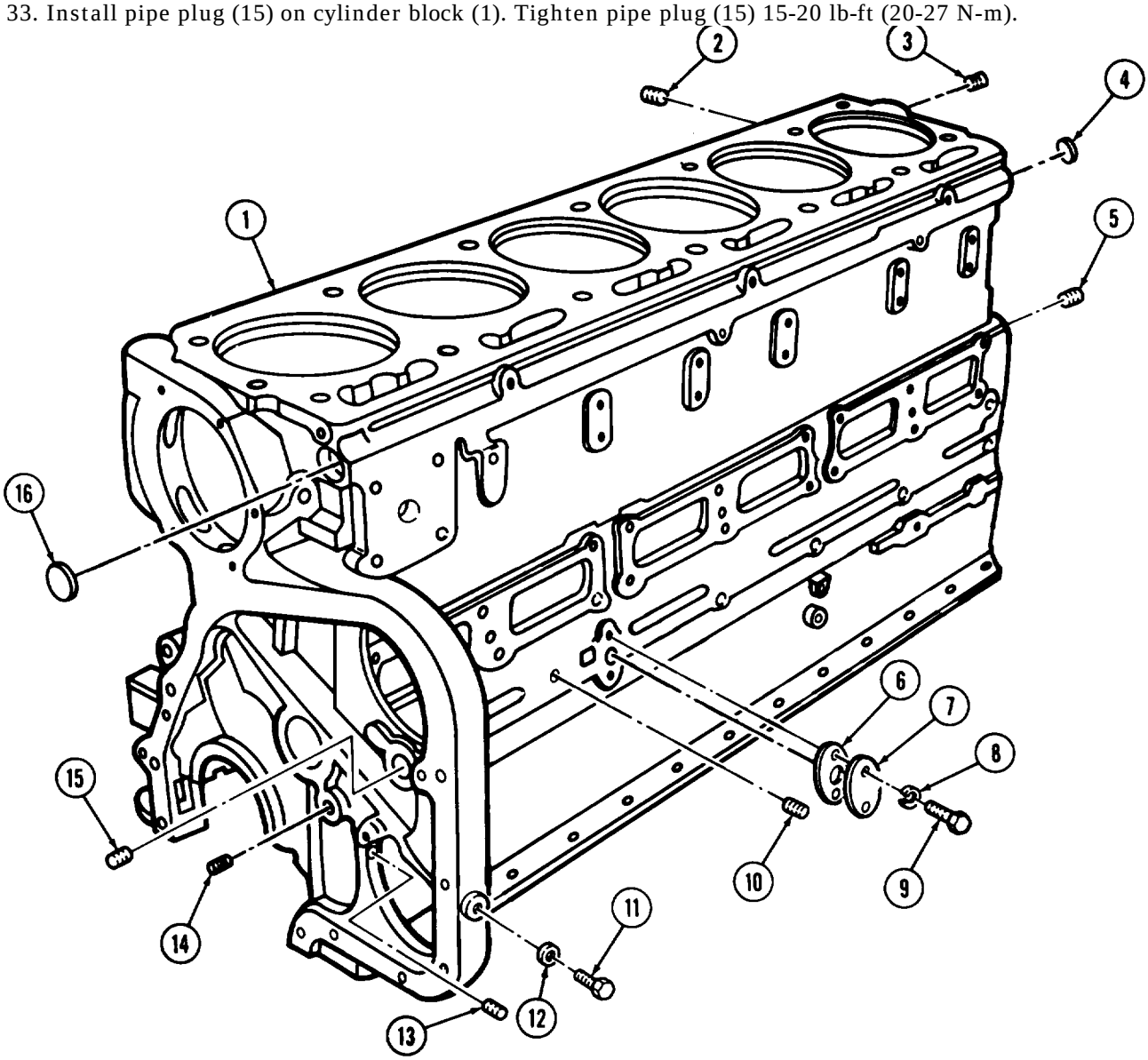

3-50. CYLINDER LINERS AND CYLINDER BLOCK MAINTENANCE (Contd)

NOTE

- Most attempts to hone or deglaze cylinder liners provide worse results than leaving them "as is." Experience and laboratory results indicate that liners do not need to be honed or deglazed to provide proper ring setting.
- It is recommended that cylinder liners be inspected before cleaning so defects can be clearly noted.
- Inspect cylinder liners closely for any of the metal conditions illustrated. If one liner has failed. then other liners in the same engine are likely to have early signs of the same type failure.

34. Inspect inside of cylinder liner (17) for scoring or grooving. Tag cylinder liner (17) for replacement if inside of cylinder liner is scored or grooved.
35. Using magnetic tester, inspect cylinder liner (17) for cracks. Tag cylinder liner (17) for replacement if cracked.
36. Inspect outside of cylinder liner (17) for pits, erosions, eroded surfaces, or fretting of surfaces. Tag cylinder liner (17) for replacement if pitted, eroded, or fretted.

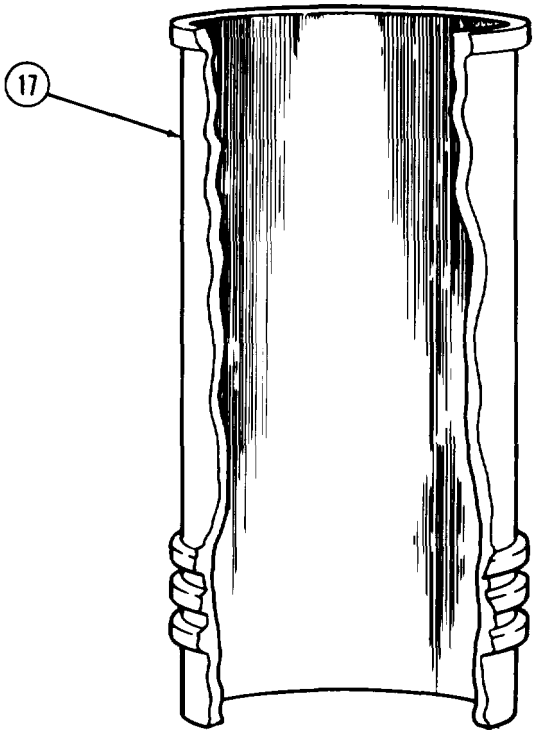

3-50. CYLINDER LINERS AND CYLINDER BLOCK MAINTENANCE (Contd)

NOTE

Do not use wire brush to clean cylinder liners.

37. Steam clean cylinder liner (1) or wash in hot water and detergent to remove rust, scales, and corrosion. Tag cylinder liner (1) for replacement if excessively rusted or corroded.

WARNING

Compressed air source will not exceed 30 psi (207 kPa). When cleaning with compressed air, eyeshields must be worn. Failure to wear eyeshields may result in injury to personnel.

38. Blow cylinder liner(s) (1) dry with compressed air.
39. Coat liner (1) generously with clean engine oil and let stand 5-10 minutes. Wipe dry. Repeat application of oil and wiping until black or grey residue no longer appears on towel.

NOTE

Cylinder liners must be checked at 60°-70° F (16°-21° C). New cylinder liners with lubrite finish may be 0.0002-0.0006 in. (0.0051-0.0152 mm) smaller than indicated due to lubrite coating.

40. Using telescoping gage, measure liner bore (2). Tag cylinder liner (1) for replacement if measurement exceeds 5.5050 in. (139.827 mm).

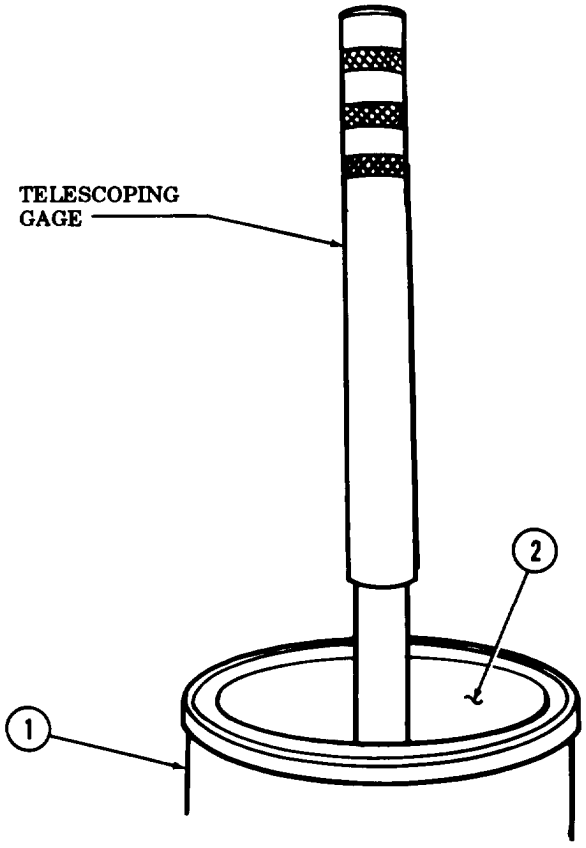

3-50. CYLINDER LINERS AND CYLINDER BLOCK MAINTENANCE (Contd)

d. Assembly

NOTE

Ensure all parts are clean and cylinder bore, counterbore, and lower bore are lubricated with clean engine oil before assembly.

1. Install new crevice seal (8) in crevice seal groove (10).
2. Install new black O-ring (7) in top O-ring groove (9).
3. Install new red O-ring (6) in bottom O-ring groove (4).

e. Installation

1. Apply clean coat of engine oil to crevice seal (8) and O-rings (7) and (6).

NOTE

When installing cylinder liner be sure not to dislodge O-rings and crevice seals.

2. Install shims (11), if necessary (steps 14-16, subtask c.), and cylinder liner (1) into cylinder block (5). Using cylinder liner driver and cylinder liner clamp set, install cylinder liner (1) until liner flange (3) is seated then clamp in place.

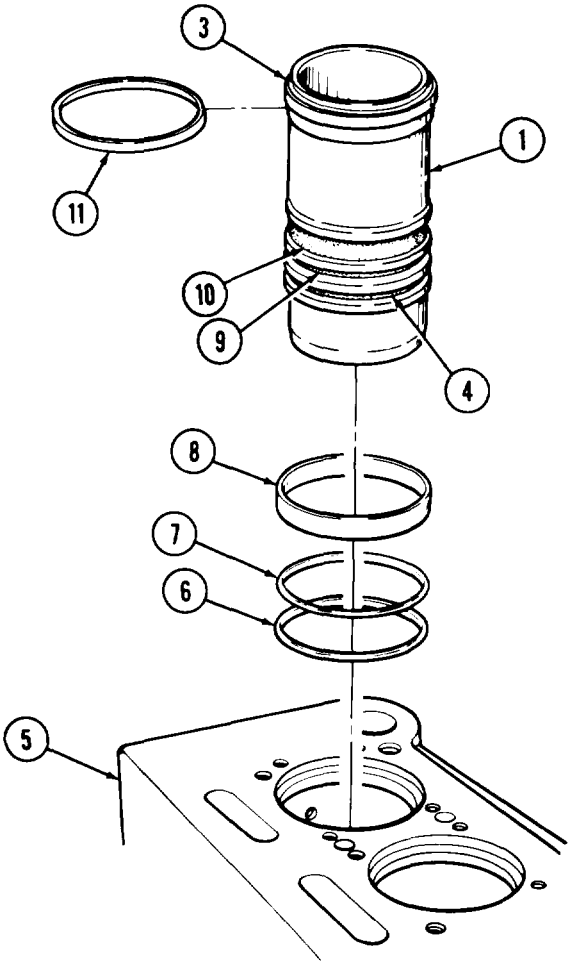

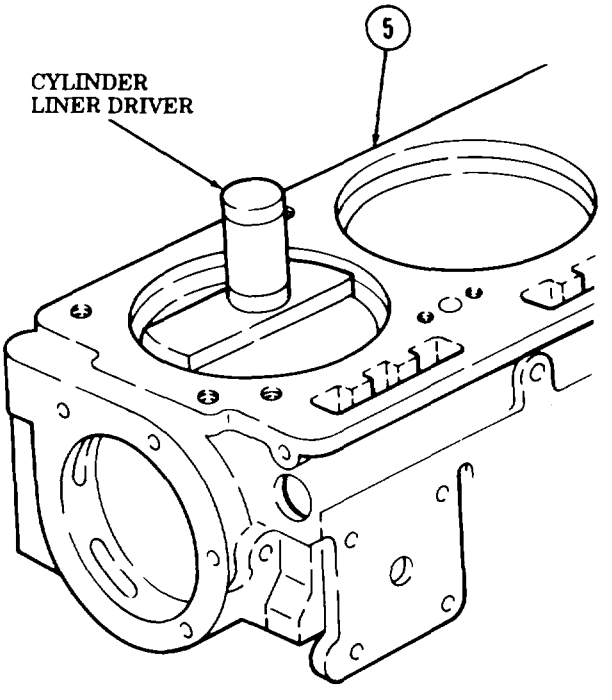

3-50. CYLINDER LINERS AND CYLINDER BLOCK MAINTENANCE (Contd)

NOTE

When performing step 3, if liner is more than 0.002 in. (0.051 mm) out-of-round in lower bore O-ring area, remove liner and check for cause of distortion. It is permissible to have 0.003 in. (0.076 mm) out-of-round at the top 1 in. (25.4 mm) of liner bore.

3. Position gage block on cylinder liner (1) and measure protrusion above cylinder block (2), If protrusion is not 0.003-0.006 in. (0.076-0.152 mm), add or remove shims.
4. Position telescoping gage in cylinder liner (1) and measure at several points within range of piston travel for out-of-round condition. If cylinder liner (1) is out-of-round, replace cylinder liner (1) (subtasks a. and e.).

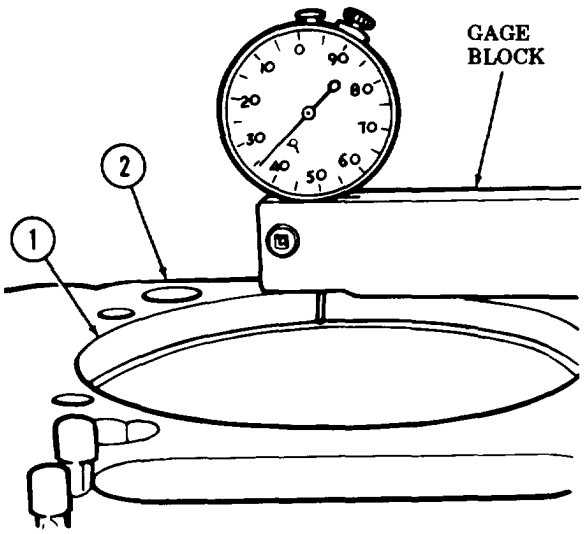

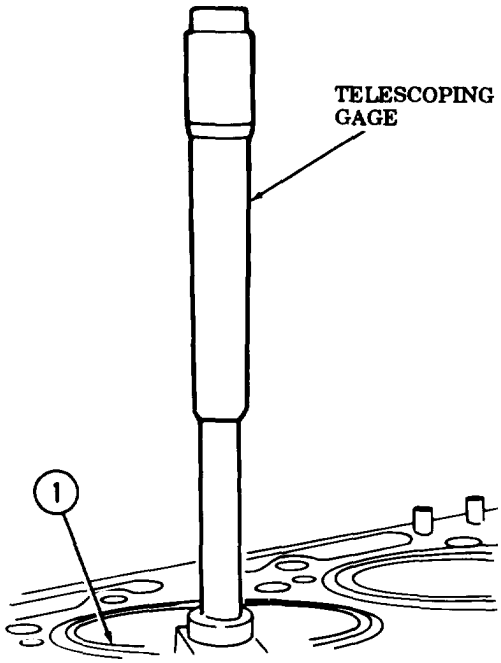

FOLLOW-ON TASK: Install crankshaft and main bearings (para. 3-54).

3-51. CYLINDER HEAD REPAIR

THIS TASK COVERS:

a. Disassembly
b. Cleaning
c. Inspection
d. Assembly

INITIAL SETUP

APPLICABLE MODELS
All

TEST EQUIPMENT
Portable magnetic tester (Appendix B, Item 70)
Vacuum tester (Appendix B, Item 82)

SPECIAL TOOLS
Air pressure gage (Appendix B, Item 73)

TOOLS
General mechanic's tool kit (Appendix B, Item 1)
Spring tester (Appendix B, Item 10)
Cleaning brush (Appendix B, Item 72)
Straightedge (Appendix B, Item 69)
Outside micrometer (Appendix B, Item 8)
Torque wrench, 1/2 in. dr. (Appendix B, Item 3)
Valve spring compressor (Appendix B, Item 81)
Soft-head hammer (Appendix B, Item 47)
Valve guide arbor (Appendix B, Item 44)
Valve guide driver (Appendix B, Item 79)
Gage block (Appendix B, Item 78)
Valve pin extractor (Appendix B, Item 80)
Guide head spacer (Appendix B, Item 36)

MATERIALS/PARTS
Two screw-assembled lockwashers (Appendix D, Item 383)
Six freeze plugs (Appendix D, Items 324)
Two freeze plugs (Appendix D, Item 325)
Freeze plug (Appendix D, Item 326)
Sixteen half-keepers (Appendix D, Item 163)
Two O-rings (Appendix D, Item 270)
Lubricating oil (Appendix C, Item 21)
Crocus cloth (Appendix C, Item 53)
Prussian blue (Appendix C, Item 26)
Sealing compound (Appendix C, Item 44)

PERSONNEL REQUIRED
Two

REFERENCES (TM)
TM 9-247
TM 9-2320-260-34P-1

EQUIPMENT CONDITION
Cylinder heads removed (para. 3-40).

GENERAL SAFETY CONDITION
- Use care when removing half-keepers from valves.
- Wear eye protection when replacing valves.

3-51. CYLINDER HEAD REPAIR (Contd)

a. Disassembly

WARNING

Valves under spring tension. Use care when removing from valves. Failure to do so may cause injury to personnel.

NOTE

Tag springs for installation

1. Using valve spring compressor, remove sixteen half-keepers (1), eight upper spring guides (7), valve springs (6), and lower spring guides (5) from valve guides (2). Discard half-keepers (1).
2. Remove eight valves (3) from cylinder head (4) and place on numbered valve board for inspection.

NOTE

Perform step 3 for number 3 head.

3. Remove two screw-assembled lockwashers (9), plate (10), and two O-rings (11) from fuel crossover connection (12). Discard O-rings (11) and screw-assembled lockwashers (9).
4. Remove four pipe plugs (16) from cylinder head (4).
5. Remove four freeze plugs (14) from cylinder head (4). Discard freeze plugs (14).
6. Remove two freeze plugs (13) from front and rear face of cylinder head (4). Discard freeze plugs (13).
7. Remove two freeze plugs (8) from top of cylinder head (4). Discard freeze plugs (8).
8. Remove freeze plug (15) from front face of cylinder head (4). Discard freeze plug (15).

b. Cleaning

1. For general cleaning instructions, refer to TM 9-247.

CAUTION

Do not use disc sander to polish cylinder heads. Serious damage to gasket sealing surfaces may result.

2. Using brush, remove all gasket remains and carbon deposits from mating surfaces. Inspect cylinder head (4) (para. 2-9).

3-51. CYLINDER HEAD REPAIR (Contd)

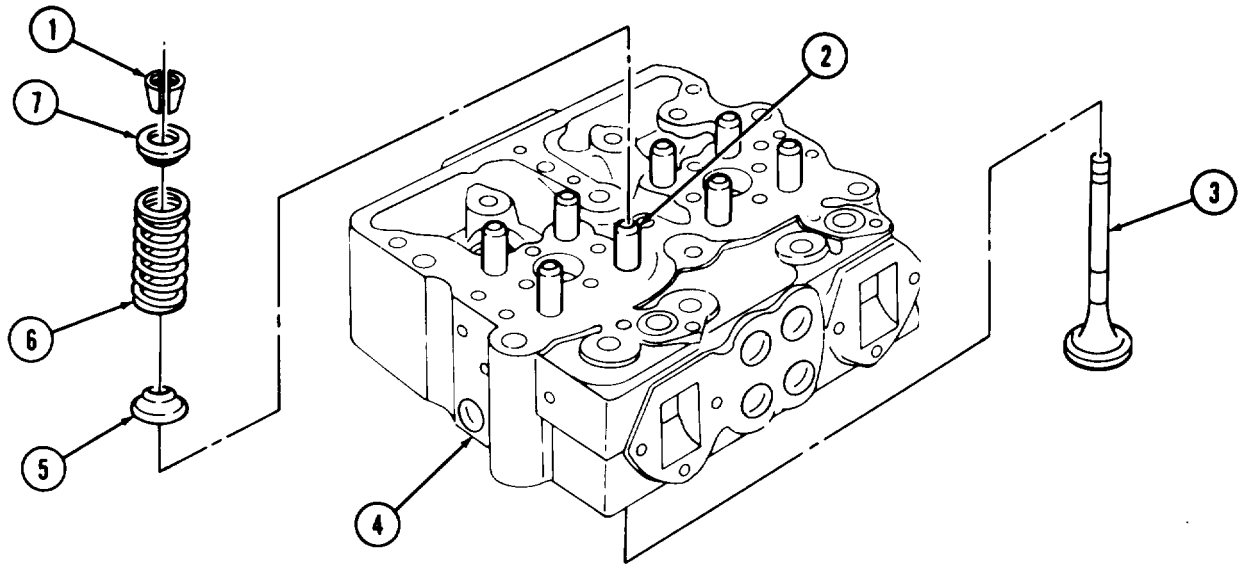

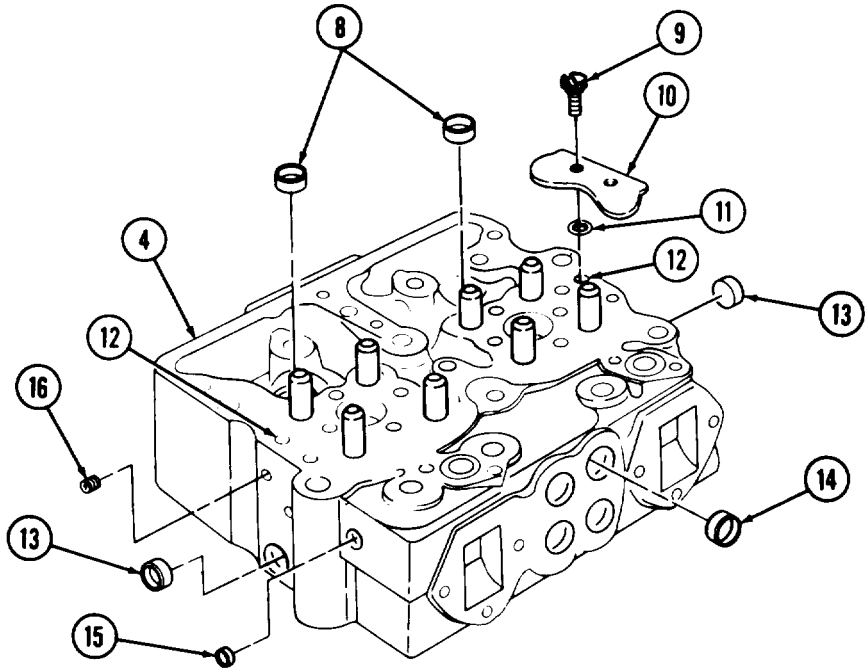

3-51. CYLINDER HEAD REPAIR (Contd)

c. Inspection

1. Install four pipe plugs (11) in front and rear face of cylinder head (1).

NOTE

Apply sealing compound to outer diameter of freeze plugs before installation.

2. Install new freeze plug (10) in front face of cylinder head (1).
3. Install two new new freeze plugs (2) in top of cylinder head (1).
4. Install two new freeze plugs (7) in front and rear face of cylinder head (1).
5. Install four new freeze plugs (9) between exhaust ports (8) on cylinder head (1).

NOTE

Perform step 6 for number 3 cylinder head.

6. Install two new O-rings (5) and plate (4) on fuel crossover connection (6) with two new screw-assembled lockwashers (3).

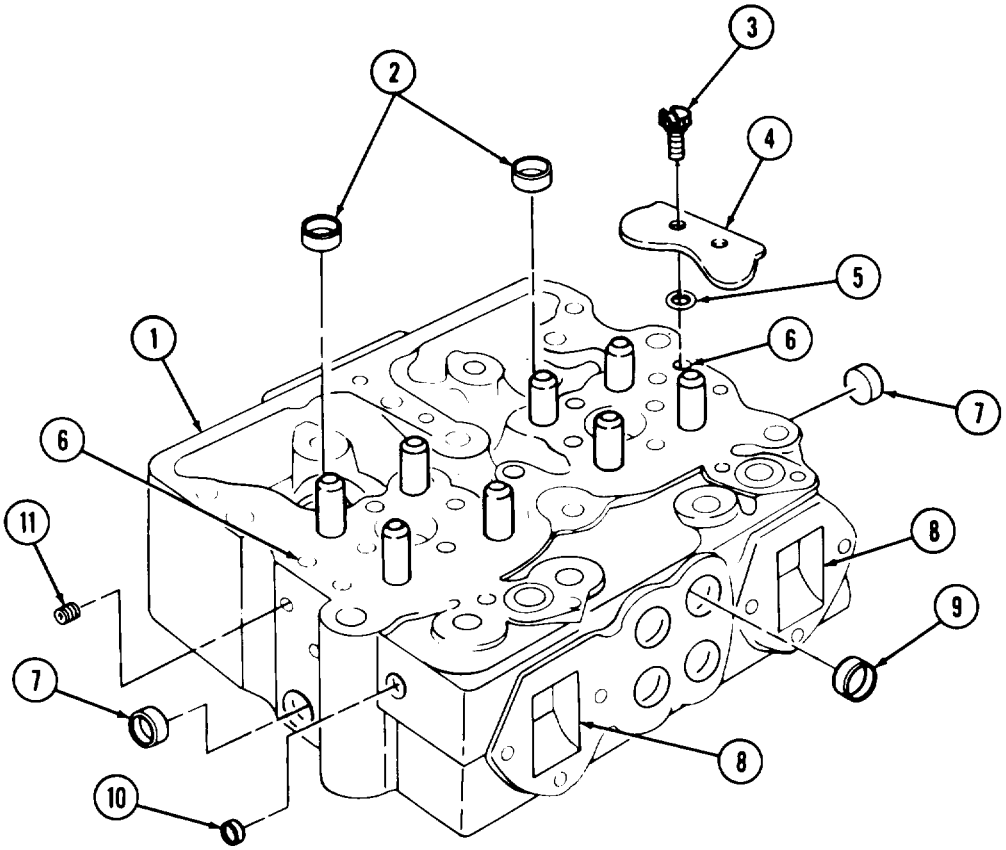

3-51. CYLINDER HEAD REPAIR (Contd)

NOTE

Instructions for use of portable magnetic tester are included with the tester.

7. Using portable magnetic tester, inspect valve seats (12) and injector ports (13) for cracks. Replace cylinder head (1) if valve seats (12) are cracked.

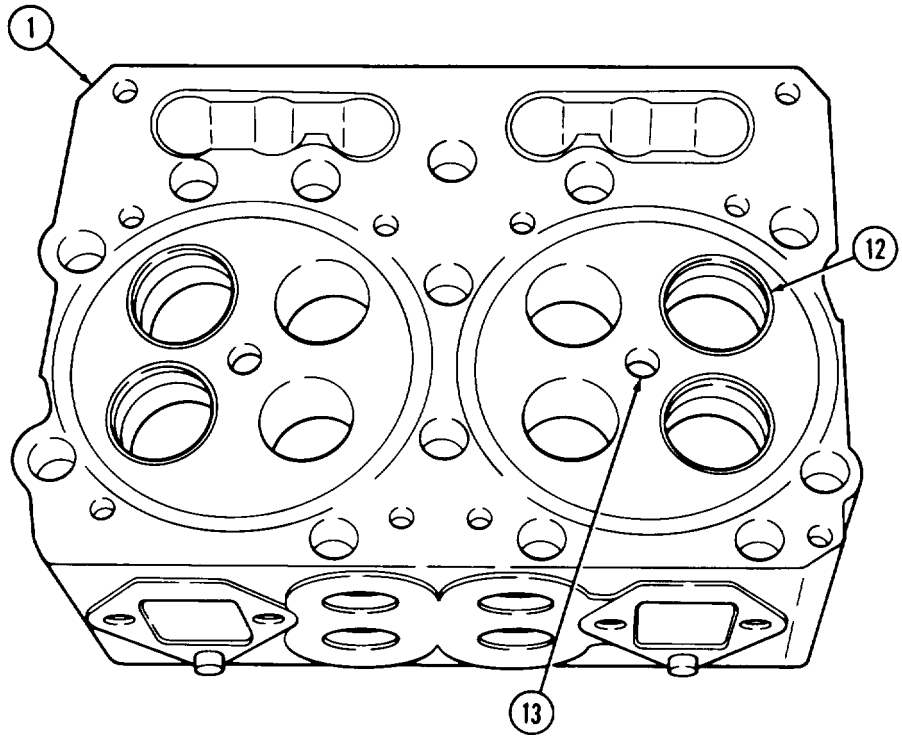

3-51. CYLINDER HEAD REPAIR (Contd)

8. Inspect valve seats (4) and injector ports (5) for hot spots. Replace cylinder head (1) if hot spots are found.
9. Inspect water passage holes (2) for pits and scratches. If pits and scratches are less that 0.003 in. (0.076 mm) remove with crocus cloth. Replace cylinder head (1) if pits and scratches are more than 0.003 in. (0.076 mm) deep in the area 0.0625-0.156 in. (1.588-3.962 mm) from edge of water passage hole (2).
10. Using straightedge and feeler gage, inspect cylinder head surface (3) for warpage. Replace cylinder head (1) if warped surface exceeds 0.002 in. (0.051 mm).

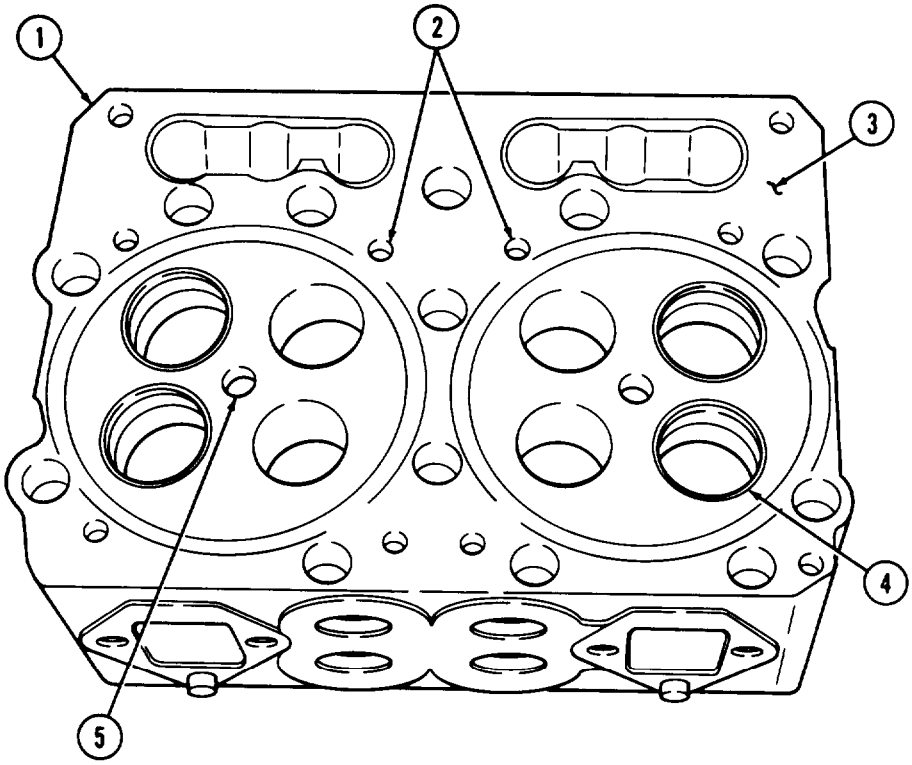

3-51. CYLINDER HEAD REPAIR (Contd)

11. Inspect for looseness by tapping around surface of valve seat insert (6). Replace valve seat insert (6) if bouncing occurs when tapped (para. 3-78).
12. Measure width (7) on valve seat insert (6). Mark valve seat inserts (6) for replacement if width (7) exceeds 0.125 in. (3.18 mm) at any one point and cannot be narrowed during regrinding (para. 3-80).

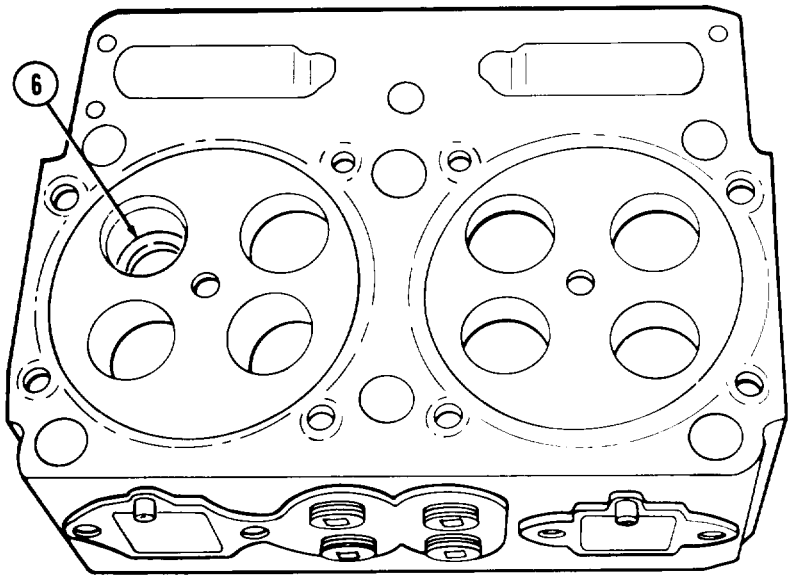

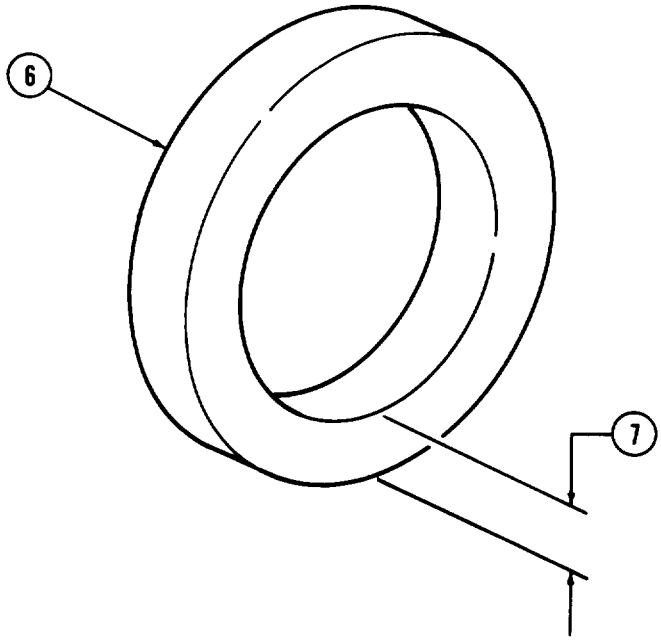

3-51. CYLINDER HEAD REPAIR (Contd)

13. Inspect valve seat insert (2) for cracks (1). Replace valve seat insert (2) if cracked (para. 3-78).
14. Inspect valve seat insert (2) for burns. Replace or resurface valve seat insert (2) if burned (para. 3-78).
15. Inspect injector sleeves (3) (para. 2-9).
16. Inspect injector cup seat area (4) for scratches with a bright light. Replace injector sleeve (3) if scratched (para. 3-79).

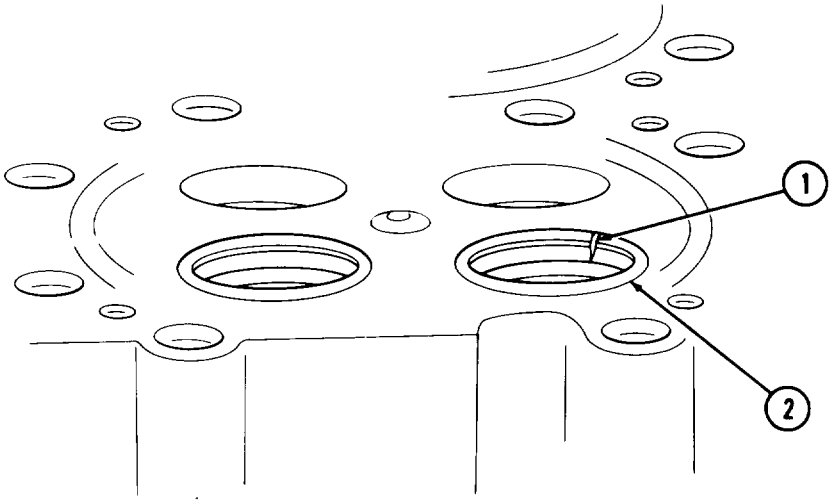

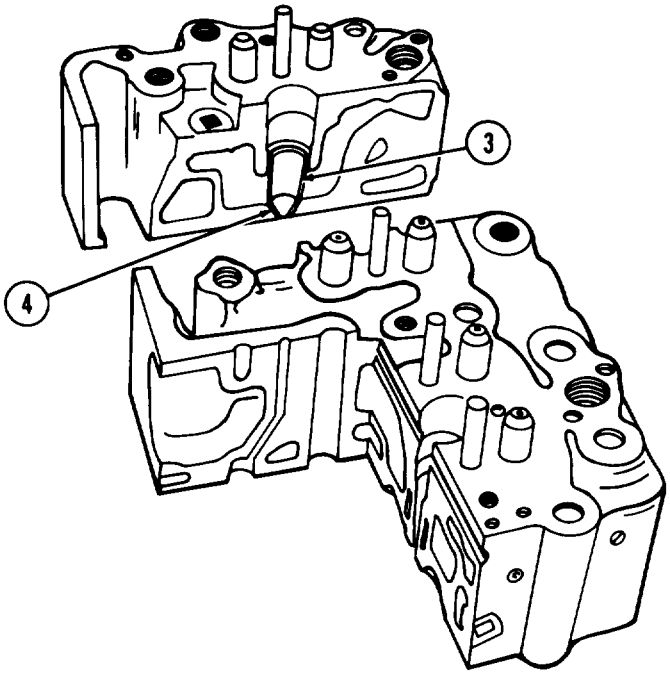

3-51. CYLINDER HEAD REPAIR (Contd)

17. Coat injector cup (10) with prussian blue.

NOTE

Top stop fuel injectors used after engine serial number 11246663.

18. Install fuel injector (8) into cylinder head (7) with washer (9), clamp (6), and two screws (5). Tighten alternately in 4 lb-ft (5 N•m) steps to 10-12 lb-ft (14-16 N•m).
19. Remove two screws (5), clamp (6), washer (9), and injector (8) from cylinder head (7).
20. Inspect seat pattern in bottom of injector sleeve (3) and sleeve seating area (12).
21. Blue band (11) on injector sleeve (3) in sleeve seating area (12) must be 0.060 in. (1.52 mm) minimum width and be located approximately 0.469 in. (11.91 mm) from bottom of cylinder head (7) surface. Replace injector sleeve (3) if seating pattern does not meet specifications (para. 3-79).

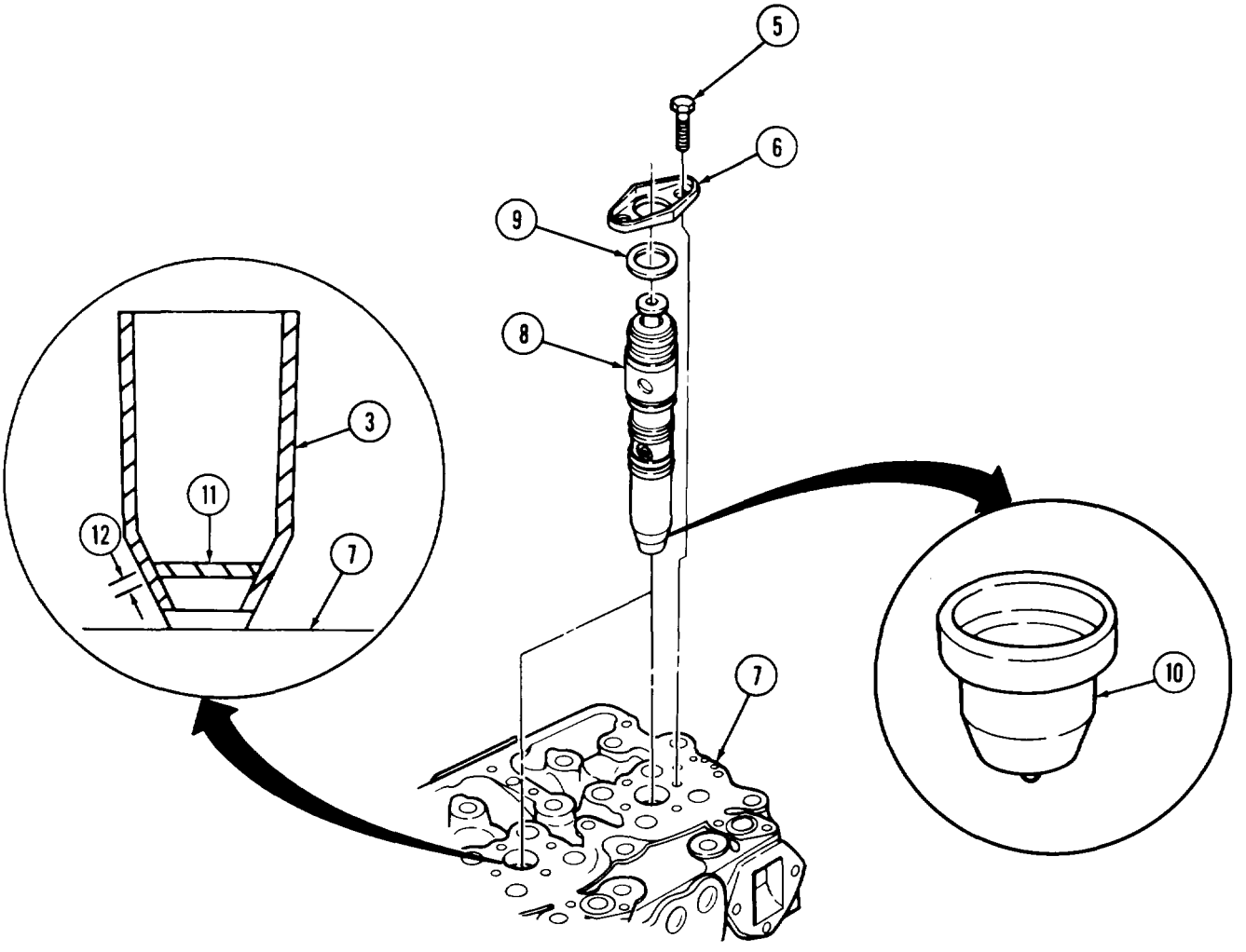

3-51. CYLINDER HEAD REPAIR (Contd)

NOTE

Top stop fuel injectors used after engine serial number 11246663.

22. Install fuel injector (4) on cylinder head (3) with washer (5), clamp (2), and two screws (1). Tighten two screws (1) alternately in 4 lb-ft (5 N•m) steps to 10-12 lb-ft (14-16 N•m).
23. Measure protrusion on injector tip (7) with gage block. Replace injector sleeve (6) if protrusion does not measure 0.060-0.070 in. (1.52- 1.78 mm) (para. 3-79).

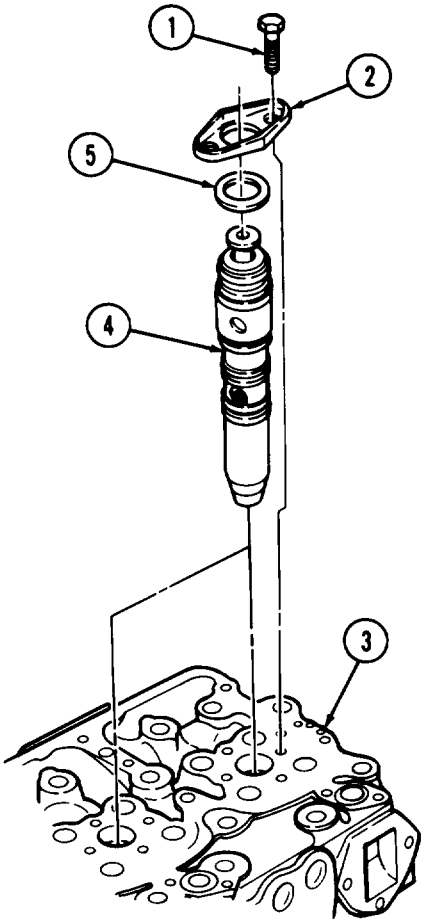

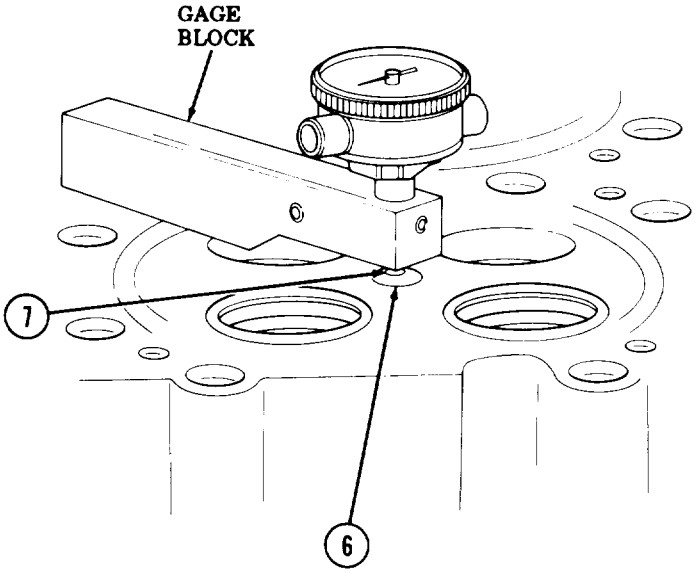

3-51. CYLINDER HEAD REPAIR (Contd)

24. Pressure test inlet fuel passage (9) and outlet fuel passage (8) for leakage or cracks in steps 25 through 32.
25. Install two new O-rings (12) and plate (11) on cylinder head (3) with two new screw-assembled lock-washers (10).
26. Install pipe adapter, pipe extension, and air pressure gage on outlet fuel passage (8).
27. Install air hose adapter, air pressure control valve, and air hose on inlet fuel passage (9).
28. Open air pressure control valve until air pressure gage reads between 80-100 psi (552-690 kPa), then close.
29. Replace cylinder head (3) if air pressure on pressure gage drops in less than fifteen seconds.
30. Remove air pressure gage, pipe extension, and pipe adapter from cylinder head (3).
31. Remove air hose, air pressure control valve, and air hose adapter from cylinder head (3).
32. Install all pipe plugs in fuel passages of cylinder head (3).

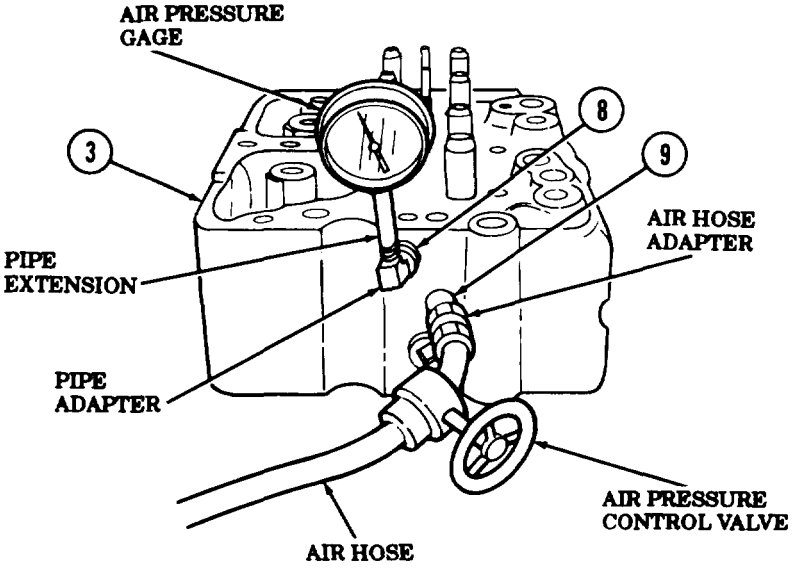

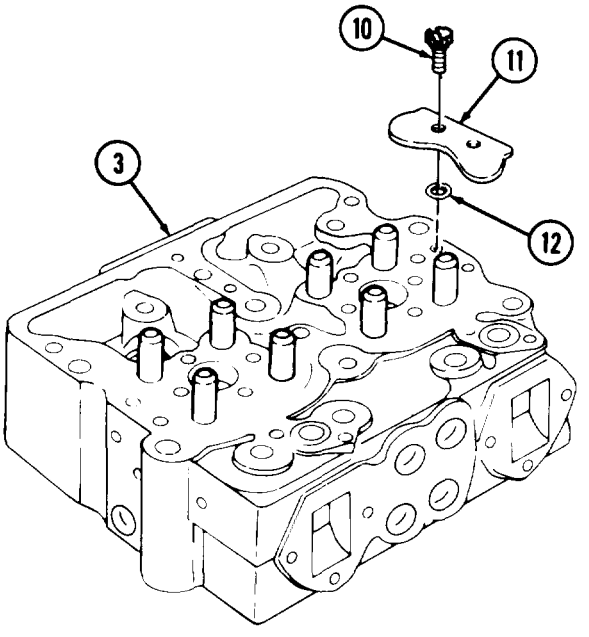

3-51. CYLINDER HEAD REPAIR (Contd)

33. Inspect four crosshead guides (1) for cracks, splits, or excessive wear. Replace crosshead guides (1) if cracked, split, or excessively worn.
34. Measure outside diameter of four crosshead guides (1). Mark crosshead guide(s) (1) for replacement if outside diameter is less than 0.432 in. (10.97 mm).
35. Measure height of crosshead guides (1). Mark crosshead guide(s) (1) for replacement if height is not 1.860-1.880 in. (47.24-47.75 mm).
36. Inspect valve crossheads (2). Replace valve crosshead(s) (2) if defective.
37. Inspect adjusting screw threads (6) for damage. Replace valve crosshead(s) (2) if threads (6) are damaged.
38. Inspect rocker lever contact area (3) for wear. Replace valve crosshead(s) (2) if rocker lever contact area (3) is worn.
39. Set small bore gage at 0.4402 in. (11.181 mm) and attempt to insert into bore (5). Replace valve crosshead (2) if bore gage goes into bore (5).
40. Inspect bore (5) for roundness by gaging at several points 90° apart. Replace valve crosshead (2) if bore (5) is not round.
41. Replace valve crosshead (2) if counterbore depth (4) is not 0.1200-0.1400 in. (3.048-3.556 mm).

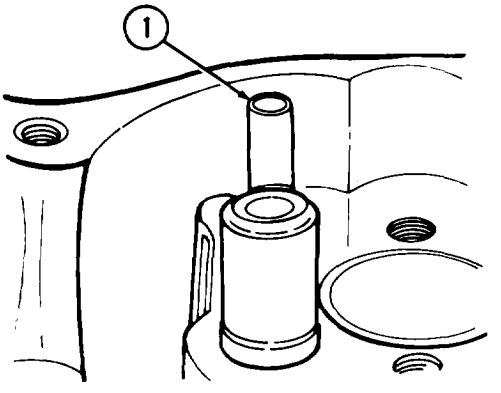

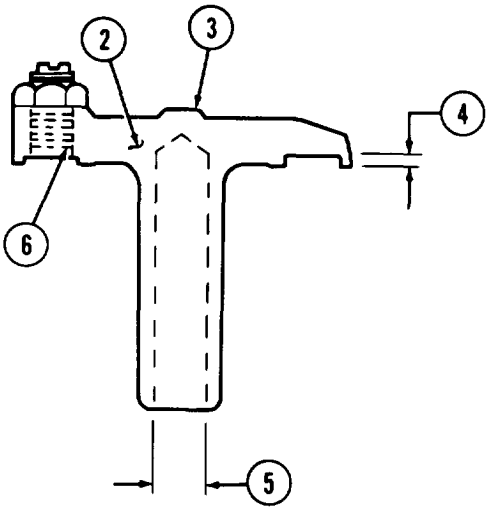

3-51. CYLINDER HEAD REPAIR (Contd)

42. Inspect eight valve guides (7) for chips, cracks, burrs, or broken out sections. Mark valve guides (7) for replacement if chipped, cracked, burred, or broken.
43. Measure protrusion height (9) of valve guide(s) (7). Mark valve guide(s) (7) for replacement if protrusion height (9) is not 1.270-1.280 in. (32.26-32.51 mm) above cylinder head surface (10).
44. Attempt to insert small bore gage, set at 0.4552 in. (11.562 mm), into valve guide bore (8). Mark valve guide(s) (7) for replacement if bore gage goes into bore.
45. Inspect valve head (15) on valves (13) for cracks, warpage, pits, burns, or cupping. Replace valve(s) (13) if cracked, warped, pitted, burned, or cupped.
46. Measure rim (14) thickness on valves (13). Replace valve(s) (13) if rim (14) thickness is less than 0.105 in. (2.67 mm).
47. Using new keeper (16), inspect grooves (12) for wear. Replace valve(s) (13) if new keepers (16) fit loosely in grooves (12).
48. Inspect valve (13) stem for cracks, scoring, and galling. Replace valve(s) (13) if stem is cracked, scored, or galled.
49. Measure outside diameter (11) on valve (13) stem. Replace valve(s) (13) if stem outside diameter (11) is less than 0.449 in. (11.40 mm).

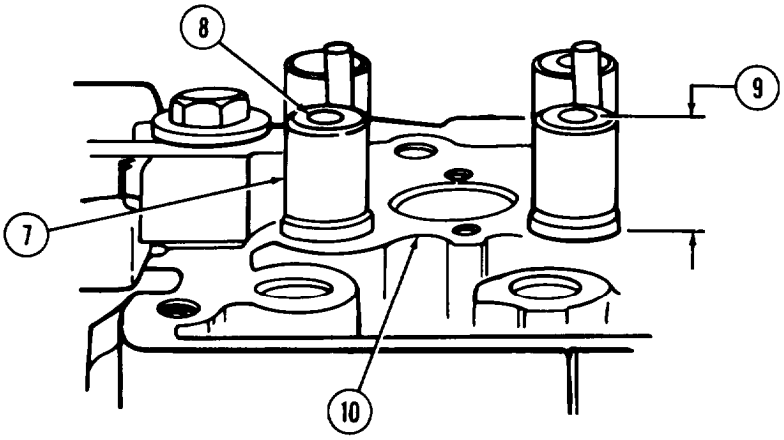

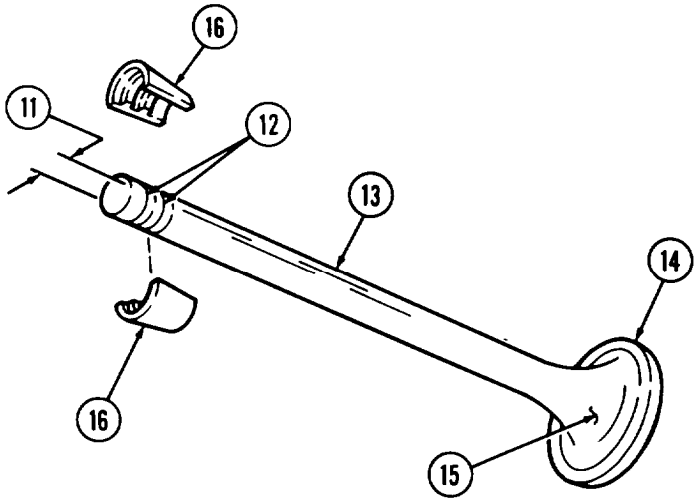

3-51. CYLINDER HEAD REPAIR (Contd)

CAUTION

Intermixing of old and new valve springs and valve guides in any one cylinder head is permissible only if a specific crosshead has two of the same type guides and springs installed under it.

50. Inspect valve springs (1) for distortions and cracked or collapsed coils. Replace valve springs (1) if distorted or if coils are cracked or collapsed.

NOTE

Valve springs come in two sizes. The shorter valve spring is referred to here as No. 1 and the longer valve spring is referred to as No. 2.

51. Measure valve spring No. 1 free length. Free length should be 2.29 in. (58.2 mm). Measure valve spring No. 2 free length. Free length should be 2.69 in. (68.3 mm). Replace valve spring No. 1 or No. 2 if free length is incorrect.

52. Using spring tester, inspect valve spring (1) by checking the load when valve spring (1) is compressed. Replace valve spring No. 1 if spring does not give a load test of at least 150 lb (667 N) when compressed to 1.77 in. (45 mm). Replace valve spring No. 2 if spring does not give a load test of at least 143 lb (636 N) when compressed to 1.72 in. (43.7 mm).

d. Assembly

NOTE

- Perform steps 1 through 6 only if inspection requires replacement.
- Use repaired and inspection approved cylinder heads only.

1. Using hammer and punch, remove worn valve guide(s) (3) from underside of cylinder head (2). Discard valve guide(s).
2. Using valve guide driver and valve guide arbor, install new valve guide(s) (3) on cylinder head (2).
3. Using valve pin extractor, remove defective crosshead guide(s) (4) from cylinder head (2). Discard crosshead guide(s) (4).
4. Clean hole in crosshead guide (4) (para. 2-8).
5. Using guide head spacer, install new crosshead guide(s) (4) on cylinder head (2).
6. Measure height of crosshead guide(s) (4). Assembled height must be 1.860-1.880 in. (47.24-47.75 mm).

3-51. CYLINDER HEAD REPAIR (Contd)

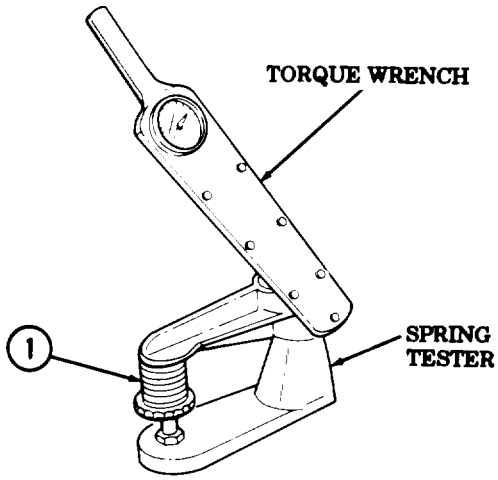

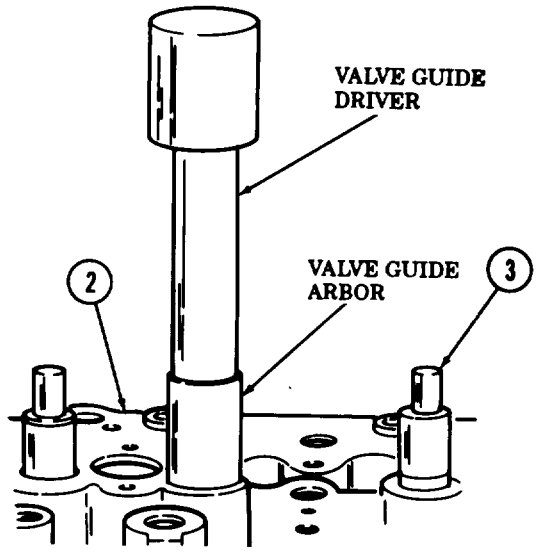

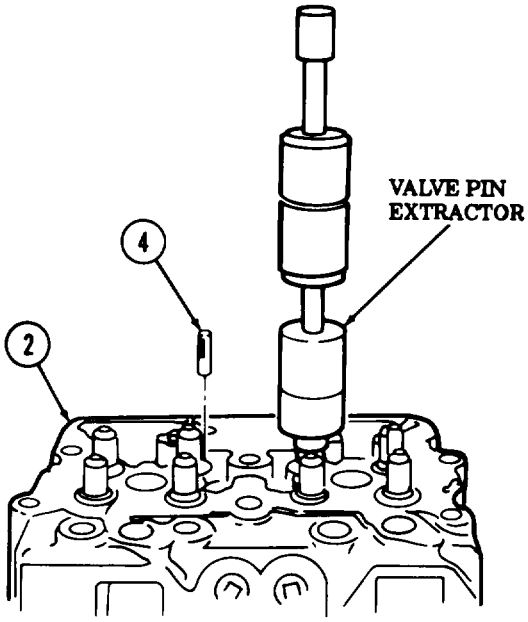

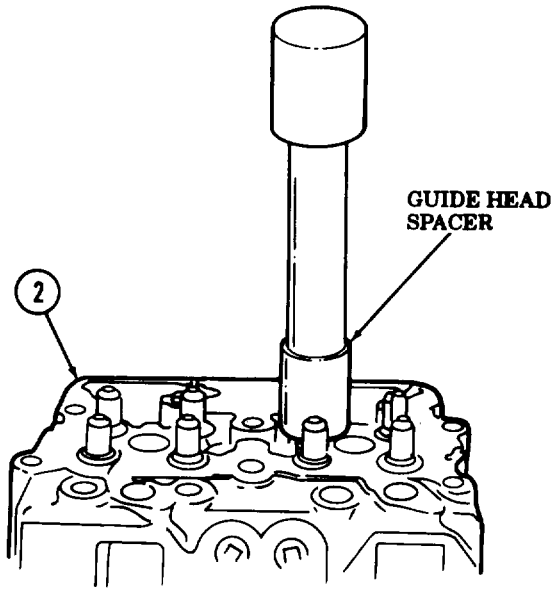

3-51. CYLINDER HEAD REPAIR (Contd)

CAUTION

Position cylinder head on a clean wooden bench or protective surface with intake port face down. Failure to do so may result in damage to cylinder head.

NOTE

Valves must be installed in original locations on cylinder head.

7. Ensure cylinder head (7) is clean (para. 2-8).
8. Dip valve stems (1) in clean lubricating oil.
9. Install valve stems (1) through valve guides (5) from face side (6) of cylinder head (7). Ensure each valve (3) is correctly seated.
10. Position cylinder head (7) face down on workbench with all valves (3) installed.

NOTE

- P/N 128879 spring guide cannot be used with P/N 211999 valve spring. Use P/N 170296 spring guide for both P/N valve springs 211999 and 178869.
- Reground valve heads seat deeper in cylinder head allowing valve springs to extend beyond length limits of 2.250 in. (57.150 mm). Use spacers up to 0.0625 in. (1.588 mm) to reduce valve spring to proper height. A maximum of two 0.0313 in. (0.794 mm) spacers may be used. Do not use spacers to compensate for weak springs.

11. Install eight lower spring guides (8) on valve guides (5) and seat to cylinder head (7).

CAUTION

Do not mix intake and exhaust springs. Intake springs are longer. Mixing springs may result in damage to equipment.

12. Install eight valve springs (9) on lower spring guides (8).
13. Install eight upper spring guides (10) over valve stems (1) on top of valve springs (9).

WARNING

Use caution when compressing valve springs. Wear eye protection at all times when installing valves. Failure to do so may cause injury to personnel.

14. Using spring compressor, compress each valve spring (9) until grooves (2) on valve (3) are exposed.
15. While compressed, install two new half-keepers (4) into grooves (2) of each valve (3). Slowly release spring compressor.

3-51. CYLINDER HEAD REPAIR (Contd)

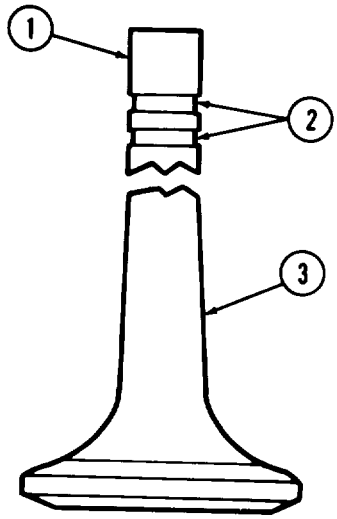

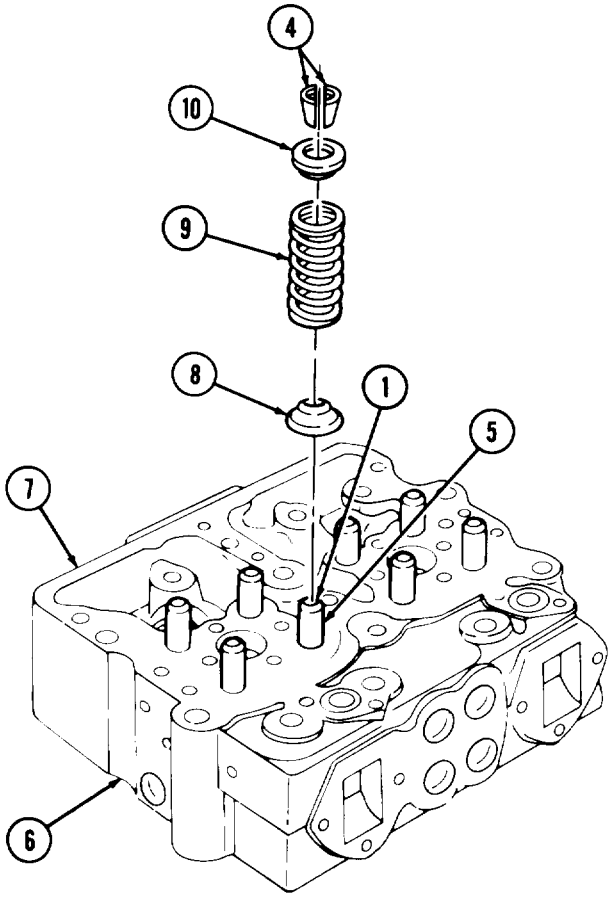

3-51. CYLINDER HEAD REPAIR (Contd)

NOTE

Operating instructions are provided with vacuum tester.

16. Vacuum test intake and exhaust valves (2) for proper valve seating.

NOTE

- Valves and valve seats must be dry.
- Use correct size vacuum cup when testing valves.

17. Hold vacuum cup over head of valve (2), and seat flat on cylinder head surface (1) surrounding valve.
18. Turn tester shutoff valve to open position and hold push button down until indicator hand on vacuum gage stops climbing – between 18-25 in. (457-635 mm) of mercury (Hg).
19. Close tester shutoff valve and release push button.
20. Begin timing indicator hand at 18 in. (457 mm) of mercury (Hg) on vacuum gage. Stop timing indicator hand at 8 in. (203 mm) of mercury (Hg). Valve (2) seating is satisfactory if timing is longer than 10 seconds.
21. Tap stem and end of valves (2) with soft-head hammer if time is less than 10 seconds. Retest by repeating steps 16 through 20.
22. Inspect for loose connections and leakage in vacuum hose if valve (2) seating is still unsatisfactory.
23. Tighten any loose connections on vacuum hose and repeat steps 16 through 20.
24. Regrind valves before retesting if test fails (para. 3-77).

3-51. CYLINDER HEAD REPAIR (Contd)

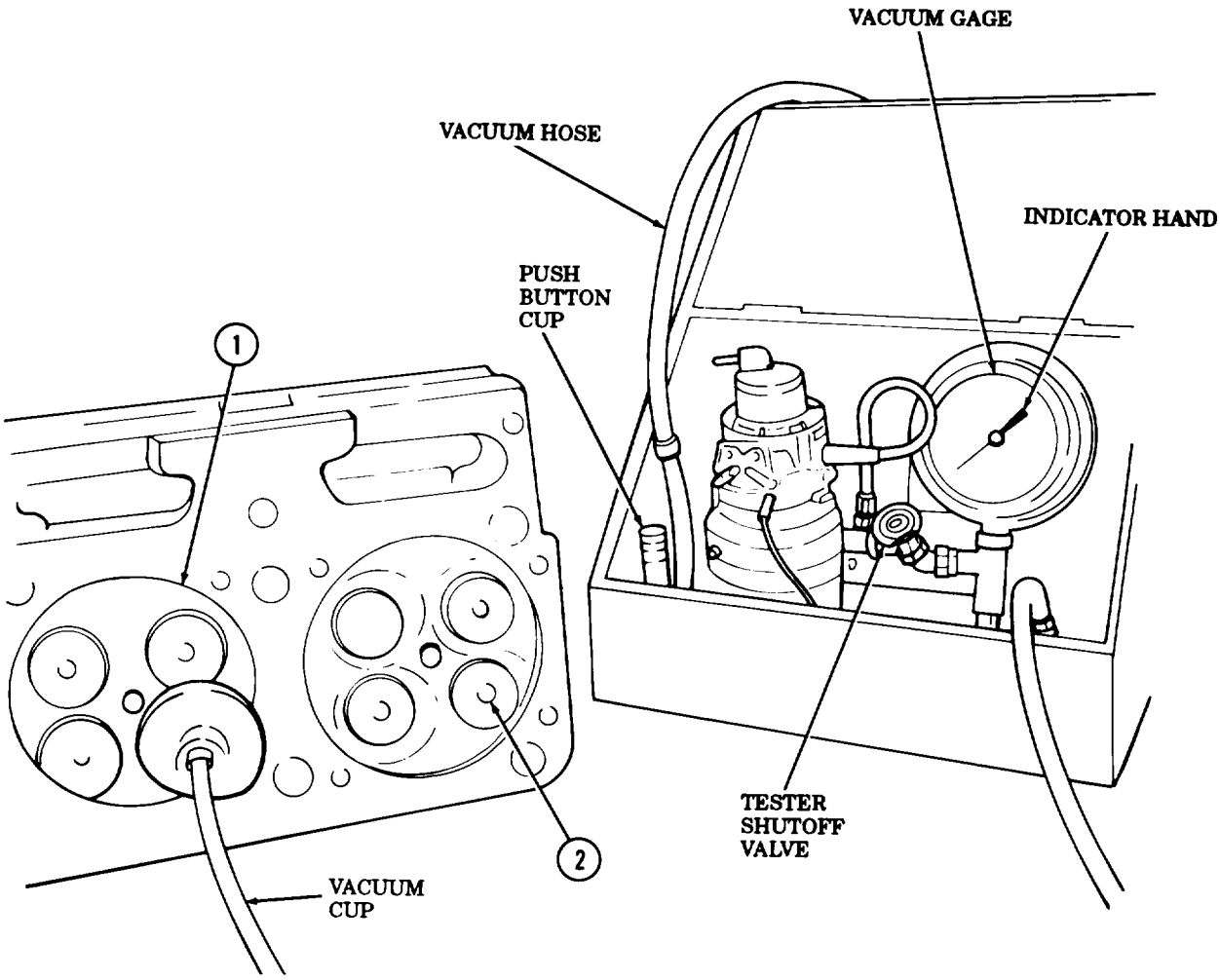

FOLLOW-ON TASK: Install cylinder heads (para. 3-62).

3-52. OIL PUMP REPAIR

THIS TASK COVERS:

a. Disassembly
b. Cleaning and Inspection
c. Assembly

INITIAL SETUP

APPLICABLE MODELS
All

SPECIAL TOOLS
Universal puller kit (Appendix B, Item 75)

TOOLS
General mechanic's tool kit (Appendix B, Item 1)
Inside micrometer (Appendix B, Item 9)
Arbor press (Appendix B, Item 7)
Oil pump boring tool (Appendix B, Item 111)
Feeler gage (Appendix B, Item 58)

MATERIALS/PARTS
Two screw-assembled lockwashers (Appendix D, Item 381)
Gasket (Appendix D, Item 69)

MATERIALS/PARTS (Contd)
Seven lockwashers (Appendix D, Item 215)
Lockplate (Appendix D, Item 166)
Spring (Appendix D, Item 520)
Bypass seat (Appendix D, Item 12)
Disk (Appendix D, Item 54)
Spring (Appendix D, Item 521)
Three lockwashers (Appendix D, Item 217)
Two gaskets (Appendix D, Item 71)
Antiseize tape (Appendix C, Item 50)
Lubricating oil (Appendix C, Item 21)

REFERENCES (TM)
TM 9-2320-260-34P-1

EQUIPMENT CONDITION
Oil pump removed (para. 3-34).

a. Disassembly

1. Remove adapter (6), elbow (5), and nipple (4), elbow (7), and nipple (8) from oil pump (1).
2. Remove pipe plugs (2), (3), (9), and (10) from oil pump (1).
3. Remove two screw-assembled lockwashers (23), flange plate (22), and gasket (21) from oil pump (1). Discard screw-assembled lockwashers (23) and gasket (21).
4. Bend tabs of lockplate (13) away from screw (11) and oil pump (1).

NOTE

Hold retaining cap when removing screw. Release retaining cap slowly when removing parts.

5. Remove screw (11), lockwasher (12), lockplate (13), retaining cap (14), plug (15), spring (16), and plunger (17) from oil pump (1). Discard lockwasher (12), lockplate (13), and spring (16).
6. Remove bypass seat (18), disk (19), and spring (20) from oil pump (1). Discard bypass seat (18), disk (19), and spring (20).
7. Remove two screws (25), lockwashers (24), six screws (26), and lockwashers (27) from filter head (28). Discard lockwashers (24) and (27).
8. Remove filter head (28) and gasket (29) from inner body (30). Discard gasket (29).

3-52. OIL PUMP REPAIR (Contd)

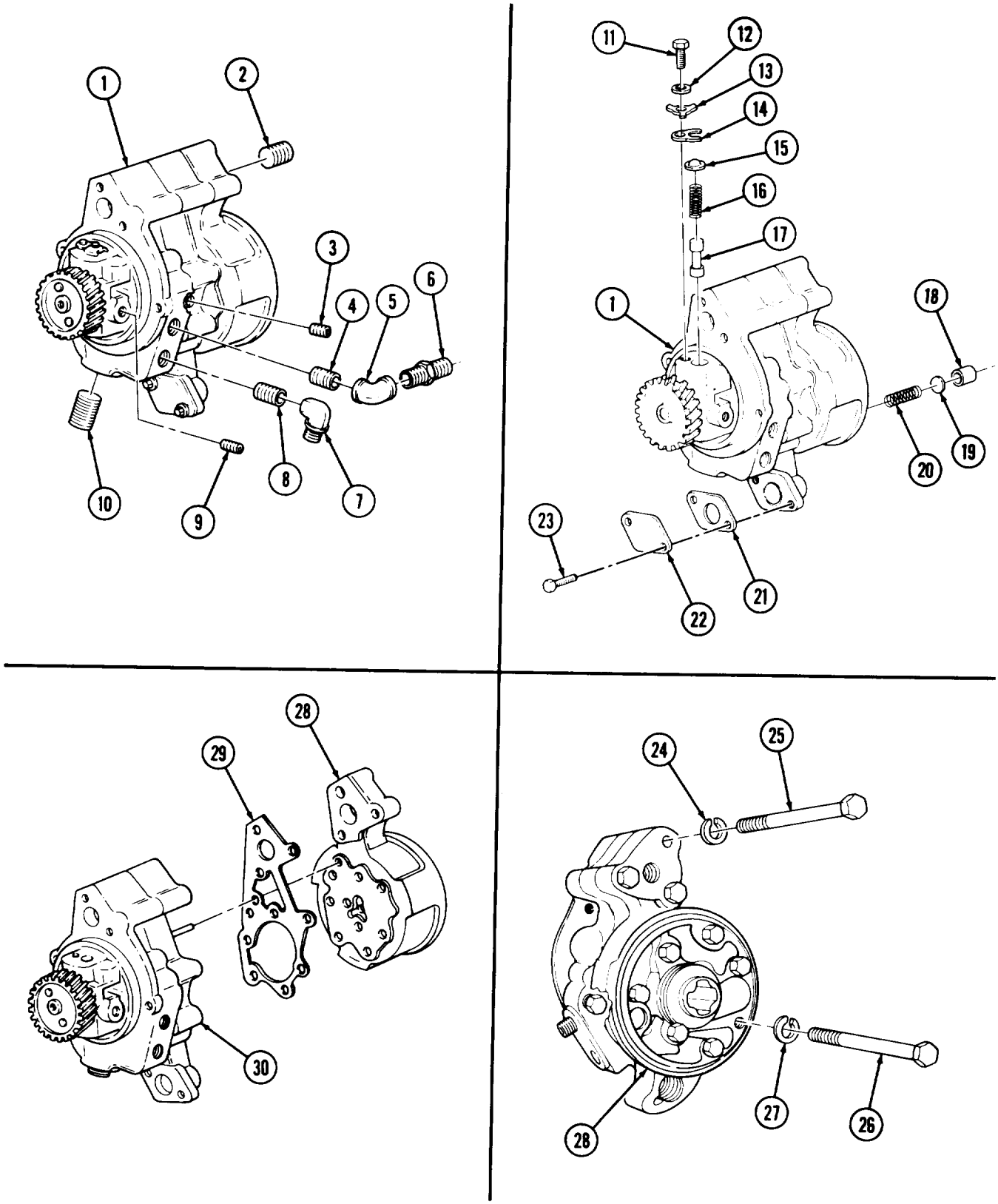

3-52. OIL PUMP REPAIR (Contd)

9. Using arbor press, remove idler gear (10) from idler shaft (11) and drive gear (9) from driveshaft (4).
10. Remove inner body (7) and gasket (6) from oil pump body (2). Discard gasket (6).
11. Remove idler gear (12) from idler shaft (11) and drive gear (3) from driveshaft (4).
12. Remove idler shaft (11) and driveshaft (4) from oil pump body (2).
13. Remove gear (1) from driveshaft (4).

NOTE

Perform step 14 if dowel pins are damaged.

14. Remove dowel pins (5) and (8) from oil pump body (2) and inner body (7).

b. Cleaning and Inspection

1. For general cleaning instructions, refer to para. 2-8.
2. Inspect oil pump body (2) for rust, corrosion, nicks, burrs, and cracks. Replace oil pump body (2) if rusted, corroded, nicked, burred, or cracked.

NOTE

Oil pump body bushings must be replaced as a pair.

3. Inspect two bushings (16) in oil pump body (2) for wear. Refer to table 3-3, Oil Pump Wear Limits, for measurements. Replace bushings (16) with arbor press if worn past limits.
4. Inspect filter head (14) for rust, corrosion, nicks, burrs, and cracks. Replace filter head (14) if rusted, corroded, nicked, burred, or cracked.
5. Inspect bushing (15) in filter head (14) for wear. Refer to table 3-3, Oil Pump Wear Limits, for measurements. Replace bushing (15) with arbor press if worn past limits.
6. Inspect inner body (7) for rust, corrosion, nicks, burrs, and cracks. Replace inner body (7) if rusted, corroded, nicked, burred, or cracked.
7. Inspect idler shaft (11) and driveshaft (4) for breaks, cracks, galling, and wear. Refer to table 3-3, Oil Pump Wear Limits, for measurements. Replace idler shaft (11) or driveshaft (4) if broken, cracked, galled, or worn past limits.
8. Inspect plunger (13) for binds or bends. Replace plunger (13) if bent or binding.
9. Inspect drive gears (3) and (9), idler gears (10) and (12), and gear (1) for cracks, chips, pits, or broken teeth. Replace gear(s) if cracked, chipped, teeth are broken, or if pits in teeth exceed one-quarter width of active tooth area.

NOTE

Idler gear bushings must be replaced as a pair.

10. Inspect four bushings (17) in idler gears (10) and (12) for wear. Refer to table 3-3, Oil Pump Wear Limits, for measurements. Replace bushings (17) with arbor press if worn past limits.

Table 3-3. Oil Pump Wear Limits.

ITEM NO.	ITEM/POINT OF MEASUREMENT	WEAR LIMITS/TOLERANCES	
		INCHES	MILLIMETERS
4 & 11	Idler shaft and driveshaft - outside diameter	0.6145	15.608
15	Bushing, filter head - inside diameter	0.6185	15.710
16	Bushing, pump body - inside diameter	0.6185	15.710
17	Bushing, idler gears - inside diameter	0.6185	15.710

3-52. OIL PUMP REPAIR (Contd)

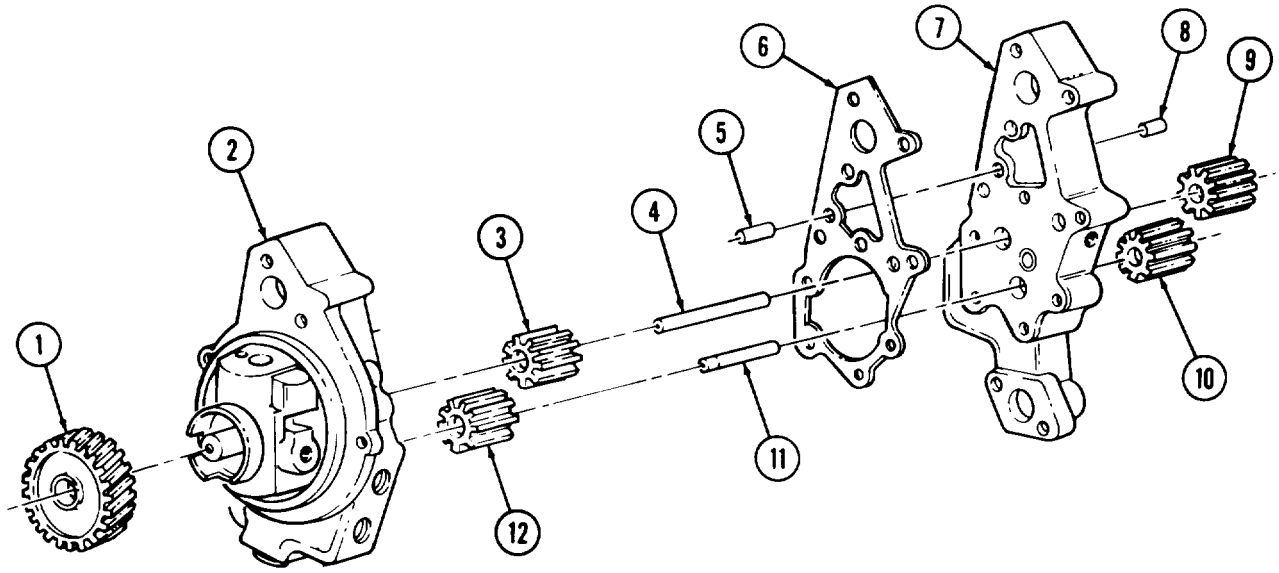

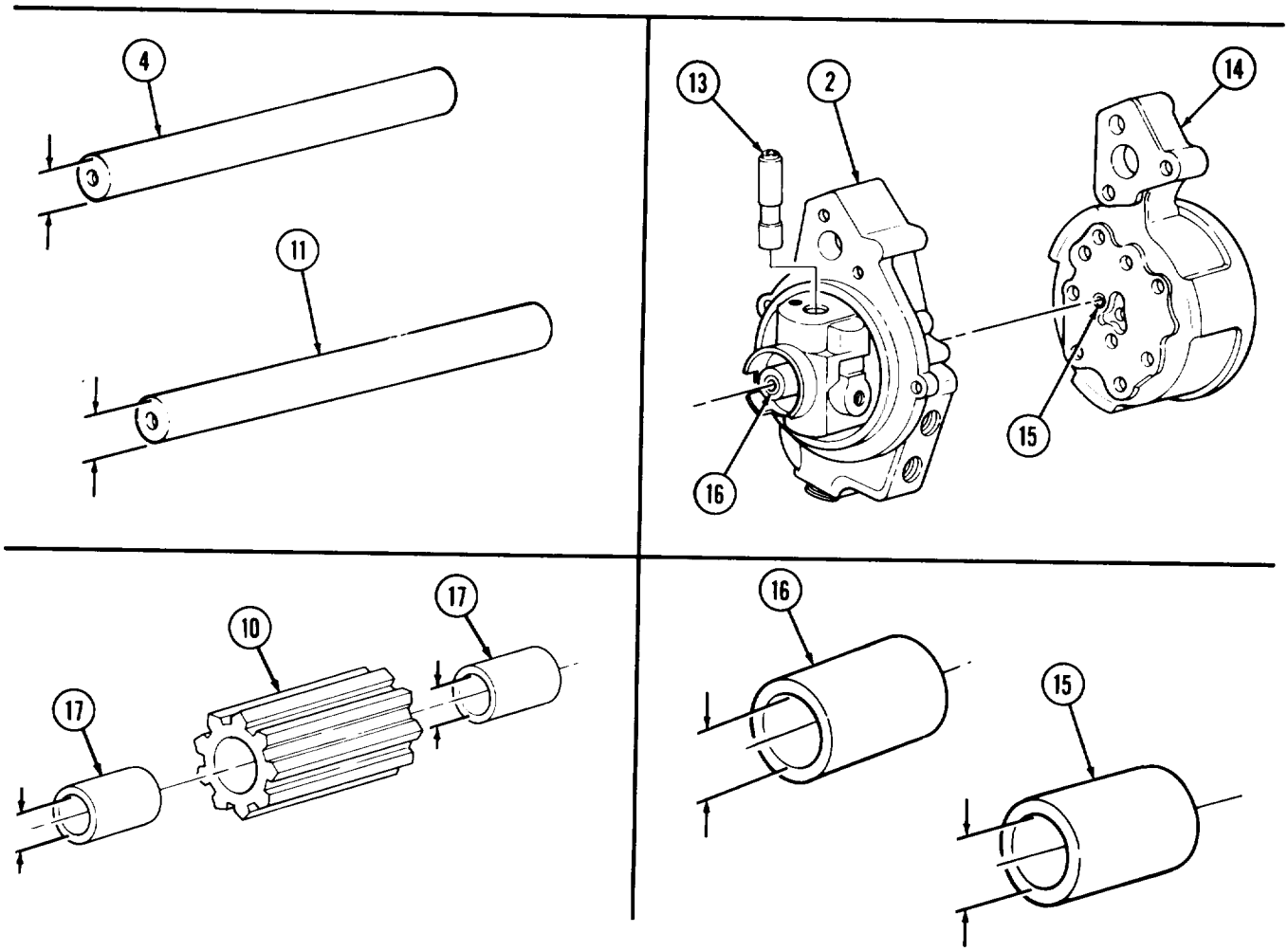

3-52. OIL PUMP REPAIR (Contd)

c. Assembly

NOTE

- Perform steps 1 and 2 if oil pump body bushings were removed.
  Perform steps 3 and 4 if filter head bushings were removed.
  Perform steps 5 and 6 if idler gear bushings were removed.
- Oil pump body bushings must be replaced as a pair.

1. Using arbor press, install two new bushings (1) in oil pump body (2) 0.030 in. (0.76 mm) below surface.
2. Using oil pump boring tool, cut two new bushings (1) inner diameter to 0.6165-0.6175 in. (15.659-15.685 mm).
3. Using arbor press, install new bushing (3) in filter head (4) 0.020 in. (0.508 mm) below surface.
4. Using oil pump boring tool, cut new bushing (3) inner diameter to 0.6165-0.6175 in. (15.659-15.685 mm).

NOTE

Idler gear bushings must be replaced as a pair.

5. Using arbor press, install two new bushings (5) in idler gear(s) (6) 0.20 in. (5.08 mm) below gear (6) surface.
6. Using oil pump boring tool, cut two new bushings (5) inner diameter to 0.6165-0.6175 in. (15.659-15.685 mm).

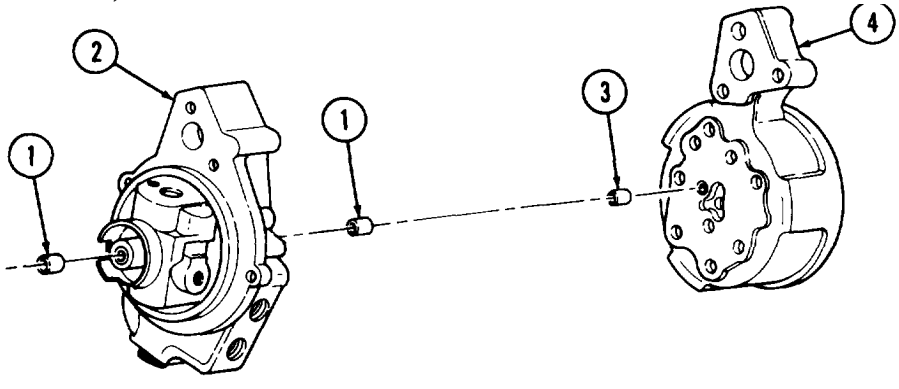

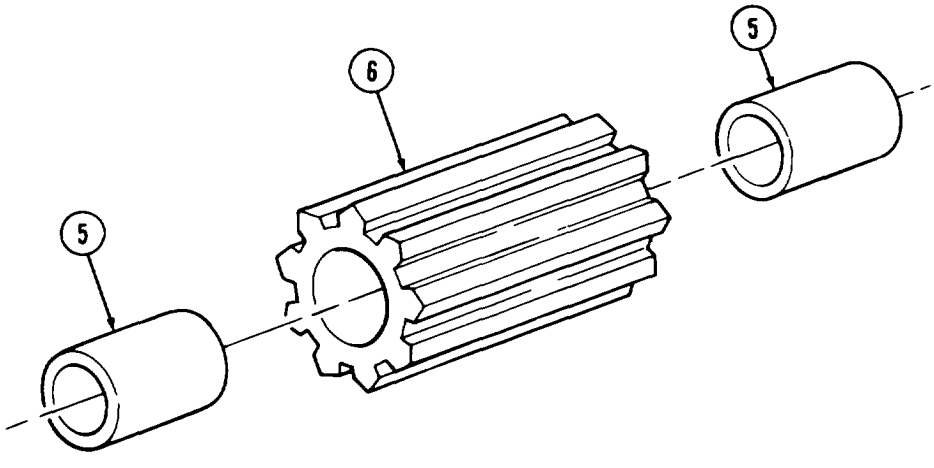

3-52. OIL PUMP REPAIR (Contd)

7. Press idler shaft (9) into gear pocket side of oil pump body (2) until idler shaft (9) extends 2.600-2.620 in. (66.04-66.55 mm) above back of oil pump body (2).
8. Press gear (7) on drilled end of driveshaft (8) until driveshaft (8) extends 0.040-0.060 in. (1.02-1.52 mm) above gear (7).
9. Lubricate driveshaft (8) with oil and insert driveshaft (8) into oil pump body (2).
10. Place 0.012 in. (0.30 mm) feeler gage between gear (7) and oil pump body (2).
11. Press gear (7) against feeler gage, then remove feeler gage.

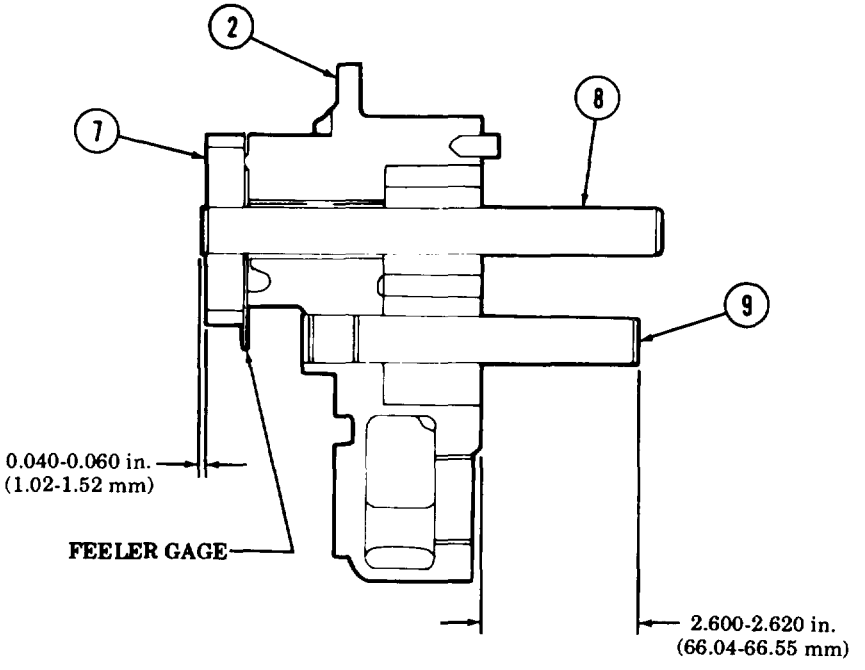

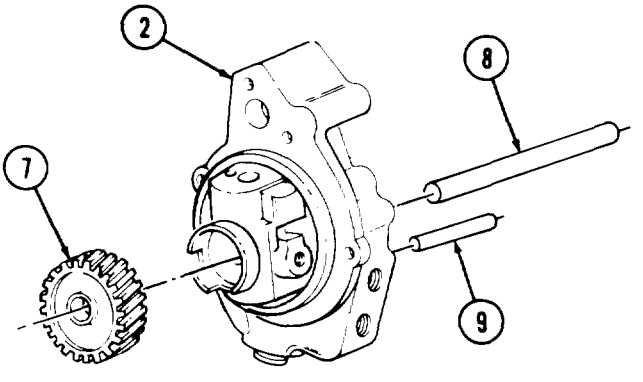

3-52. OIL PUMP REPAIR (Contd)

NOTE

- Perform steps 12 and 13 if dowel pins were removed from oil pump.
- All parts must be coated with clean lubricating oil before assembly.

12. Install new dowel pin (4) in inner body (6) 0.990-1.010 in. (25.15-25.65 mm) above inner body (6) face.
13. Install new dowel pin (7) in inner body (6) 0.990-1.010 in. (25.15-25.65 mm) above inner body (6) face.
14. Using arbor press, install drive gear (3) on driveshaft (2).
15. Install idler gear (10) on idler shaft (11).
16, Position inner body (6) on driveshaft (2) and idler shaft (11).
17. Place 0.012 in. (0.30 mm) feeler gage between drive gear (3) and inner body (6).
18. Press inner body (6) to seat drive gear (3). Remove inner body (6) and feeler gage.
19. Lubricate idler gear (10), drive gear (3), idler shaft (11), and driveshaft (2) with oil.

NOTE

When installing inner body, ensure screw holes in inner body and pump body aline.

20. Install new gasket (5) and inner body (6) on oil pump body (1).
21. Using arbor press, install drive gear (8) on driveshaft (2) leaving 0.002-0.004 in. (0.05-0.10 mm) clearance between drive gear (8) and inner body (6) pocket surface.
22. Install idler gear (9) on idler shaft (11).
23. Lubricate drive gear (8), idler gear (9), idler shaft (11), and driveshaft (2) with oil.
24. Install new lockwasher (15) and screw (14) in inner body (6). Do not tighten screw (14).
25. Install new gasket (12) and filter head (13) on inner body (6) with two new lockwashers (16), screws (17), six new lockwashers (19), and screws (18). Tighten screws (17) and (18) 30-35 lb-ft (41-47 N•m).

NOTE

Proper gear end play is 0.004-0.007 in. (0.10-0.18 mm).

26. Rotate gear (20) to ensure free movement and check end play.
27. If end play is too high, press gear (20) and driveshaft (2) into oil pump (21) until proper end play is reached.
28. If end play is too low, pull gear (20) and driveshaft (2) out of oil pump (21) until proper end play is reached.
29. If end play is correct, proceed to step 30.

3-52. OIL PUMP REPAIR (Contd)

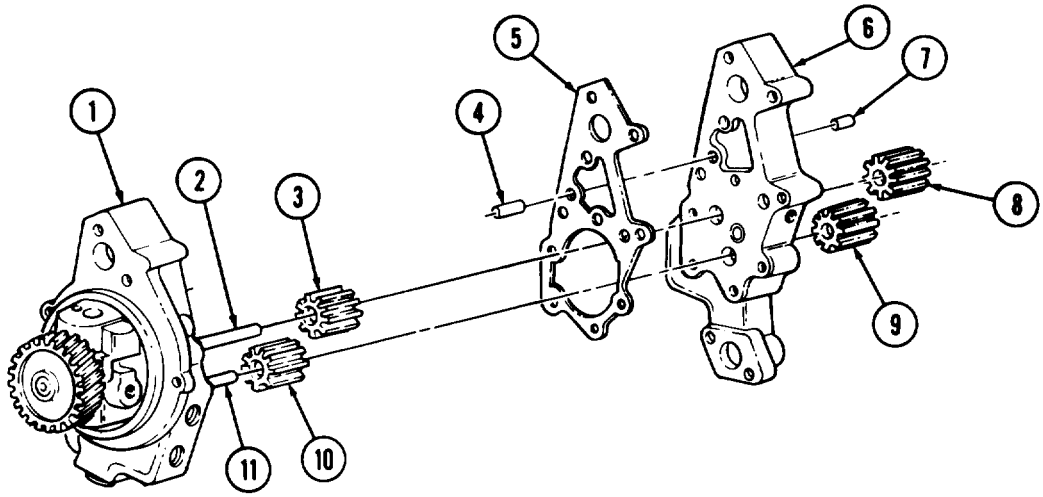

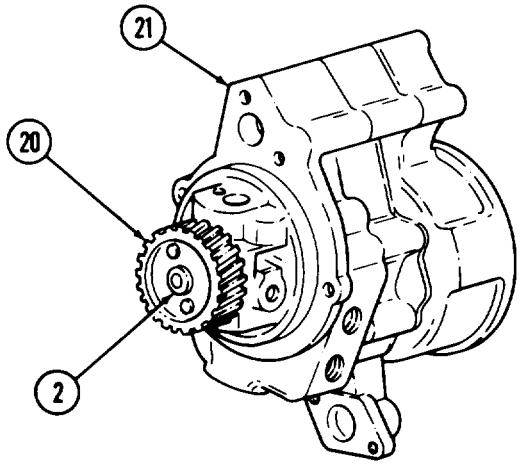

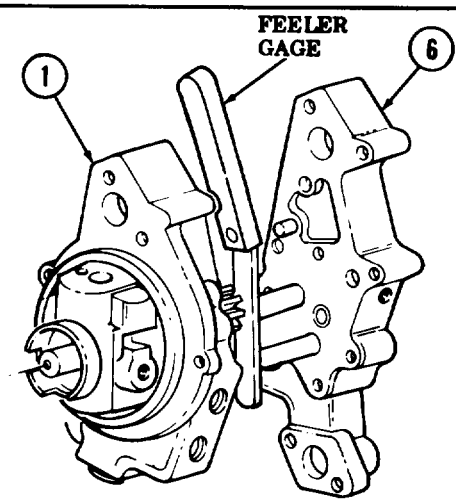

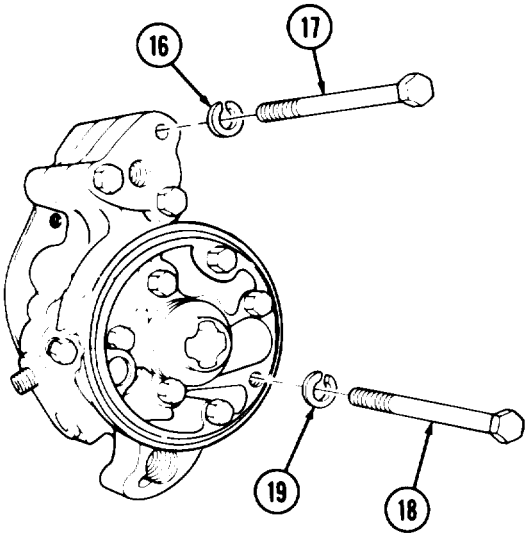

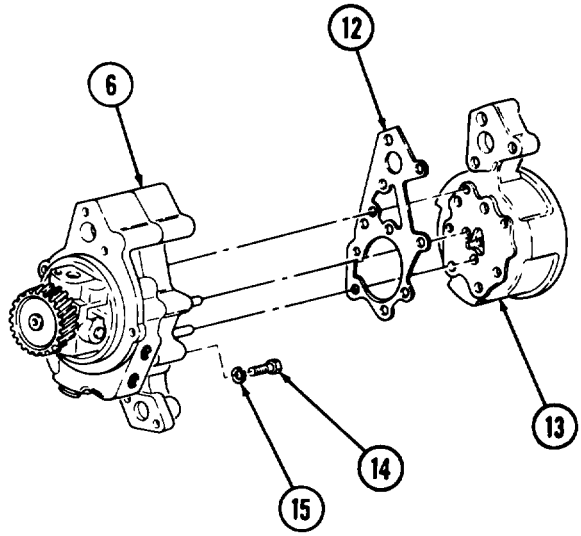

3-52. OIL PUMP REPAIR (Contd)

30. Install plunger (7), new spring (6), and plug (5) in oil pump (14) with retaining cap (4), new lockplate (3); new lockwasher (2) and screw (1). Bend two tabs of lockplate (3) over screw (1) and one tab of lockplate (3) over oil pump (14).
31. Install new spring (8), new disk (9), and new bypass seat (10) in oil pump (14).
32. Install new gasket (11) and flange plate (12) on oil pump (14) with two new screw-assembled lockwashers (13).

NOTE

Male pipe threads must be wrapped with antiseize tape before installation.

33. Install pipe plug (23) in oil pump (14). Tighten pipe plug (23) 45-55lb-ft(61-75 N•m).
34. Install pipe plug (22) in oil pump (14). Tighten pipe plug (22) 20-30 lb-ft (27-41 N•m).
35. Install pipe plug (16) in oil pump (14). Tighten pipe plug (16) 30-40lb-ft(41-54 N•m).
36. Install pipe plug (15) in oil pump (14). Tighten pipe plug (15) 45-55 lb-ft (61-75 N•m).
37. Install nipple (21), elbow (20), nipple (17), elbow (18), and adapter (19) on oil pump (14).

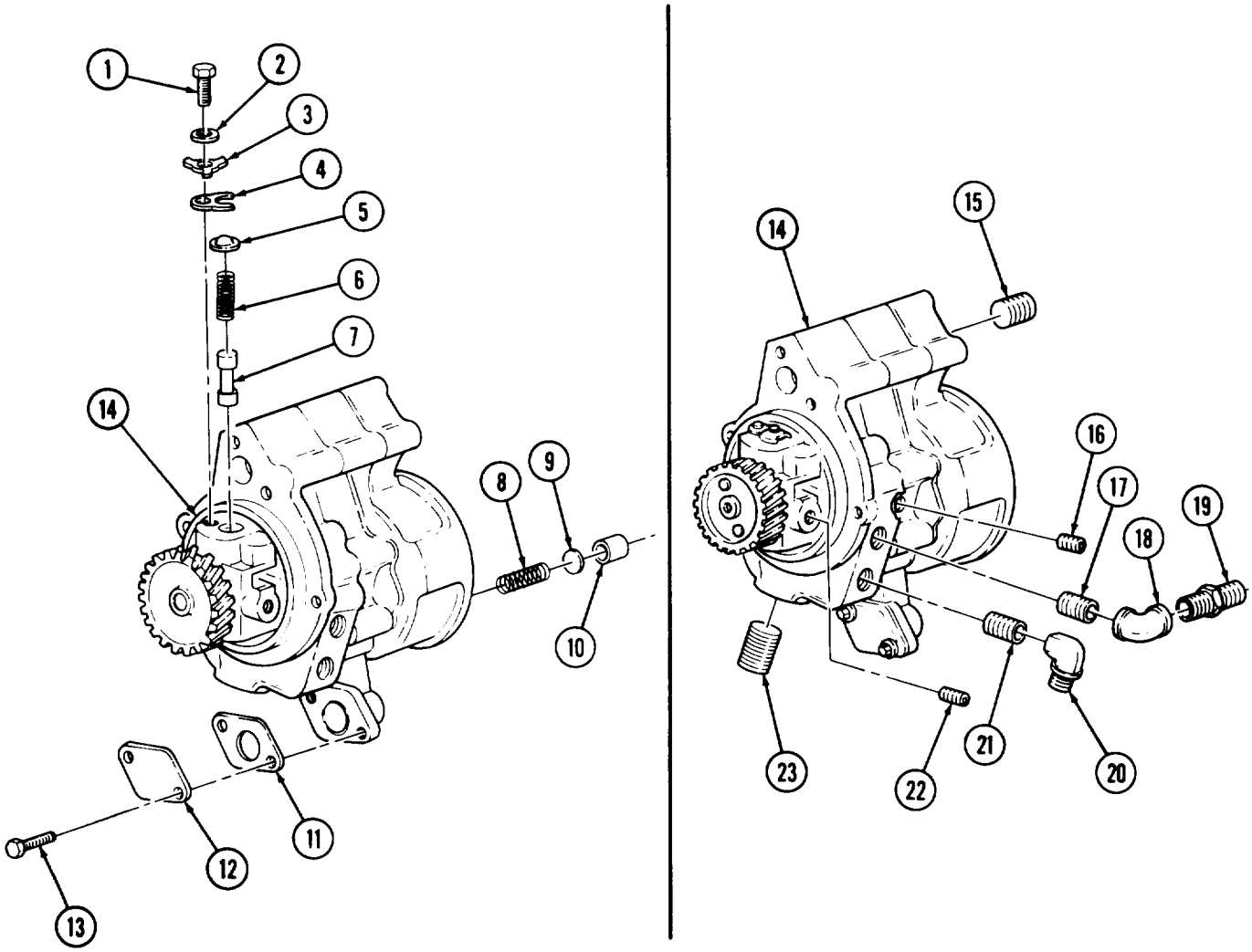

FOLLOW-ON-TASK: Install oil pump (para. 3-68).

Section VI. ENGINE ASSEMBLY FROM SUBASSEMBLIES

3-53. ENGINE ASSEMBLY FROM SUBASSEMBLIES INDEX

PARA. NO.	TITLE	PAGE NO.
3-54.	Crankshaft and Main Bearing Installation	3-178
3-55.	Piston and Connecting Rod Installation	3-180
3-56.	Camshaft Installation	3-184
3-57.	Rear Cover and Oil Seal Installation	3-186
3-58.	Flywheel Housing Installation	3-188
3-59.	Flywheel and Clutch Installation	3-191
3-60.	Fuel Crossover Connector Installation	3-193
3-61.	Cam Follower Installation	3-194
3-62.	Cylinder Head Installation	3-196
3-63.	Crosshead Installation	3-198
3-64.	Rocker Lever Housings and Push Tubes Installation	3-200
3-65.	Rocker Lever Housing Covers Installation	3-202
3-66.	Engine Lifting Brackets Installation	3-203
3-67.	Intake Manifold Installation	3-204
3-68.	Oil Pump Installation	3-205
3-69.	Accessory Drive Installation	3-206
3-70.	Accessory Drive Pulley Installation	3-207
3-71.	Front Gear Cover Installation	3-208
3-72.	Oil Pan Installation	3-210
3-73.	Crankshaft Flange Installation	3-212
3-74.	Vibration Damper Installation	3-213
3-75.	Engine Removal from Repair Stand	3-214

3-54. CRANKSHAFT AND MAIN BEARING INSTALLATION

THIS TASK COVERS:

Installation

INITIAL SETUP

APPLICABLE MODELS

All

TOOLS

General mechanic's tool kit (Appendix B, Item 1)
Torque wrench, 1/2-in. dr. (Appendix B, Item 3)
Main bearing-cap puller (Appendix B, Item 92)
Lifting straps (Appendix B, Item 155)
Chain
Lifting device

MATERIALS/PARTS

Fourteen locktabs (Appendix D, Item 206)
Woodruff key (Appendix D, Item 549)
Plastigage (Appendix C, Item 30)
Lubricating oil (Appendix C, Item 21)

REFERENCES (TM)

TM 9-2320 -260-34P-1

Installation

NOTE

Perform step 1 if crankshaft gear was removed from crankshaft.

1. Position new woodruff key (13) on crankshaft (9) and press crankshaft gear (12) on crankshaft (9).
2. Install seven ring dowels (7) on cylinder block (6).
3. Apply lubricating oil to seven upper main bearing shells (8) and install thrust ring halves (5) and upper main bearing shells (8) on cylinder block (6).
4. Install lifting strap on lifting device and crankshaft (9).
5. Install crankshaft (9) on cylinder block (6).
6. Remove lifting device and lifting strap from crankshaft (9).
7. Install plastic clearance gage on main bearing journals (4).

CAUTION

Ensure main bearing caps are installed in their original position.

8. Apply lubricating oil to seven lower main bearing shells (10) and main bearing journals (4) and install thrust ring halves (3), lower main bearing shells (10), and main bearing caps (11) on journals (4), crankshaft (9), and cylinder block (6) with fourteen new locktabs (2) and screws (1),
9. Tighten screws (1) as follows:
   a. Tighten screws (1) 140 lb-ft (190 N•m) in sequence.
   b. Tighten screws (1) 300 lb-ft (407 N•m) in sequence.
   c. Loosen screws (1) completely.
   d. Tighten screws (1) 140 lb-ft (190 N•m) in sequence.
   e. Tighten screws (1) 300 lb-ft (407 N•m) in sequence.
10. Remove fourteen screws (1) and locktabs (2) from main bearing caps (11).
11. Using main bearing cap puller, remove seven main bearing caps (11) and lower main bearing shells (10).
12. Using plastic clearance gage package, determine oil clearance. Clearance should be 0.0015 -0.0050 in. (0.038-0.127 mm). If clearance is incorrect, replace crankshaft (9) or send to next higher level maintenance for grinding. Install oversize bearings if crankshaft (9) is ground.
13. If clearance is correct, repeat steps 8 and 9. Bend tabs of locktabs (2) over heads of screws (l).

3-54. CRANKSHAFT AND MAIN BEARING INSTALLATION (Contd)

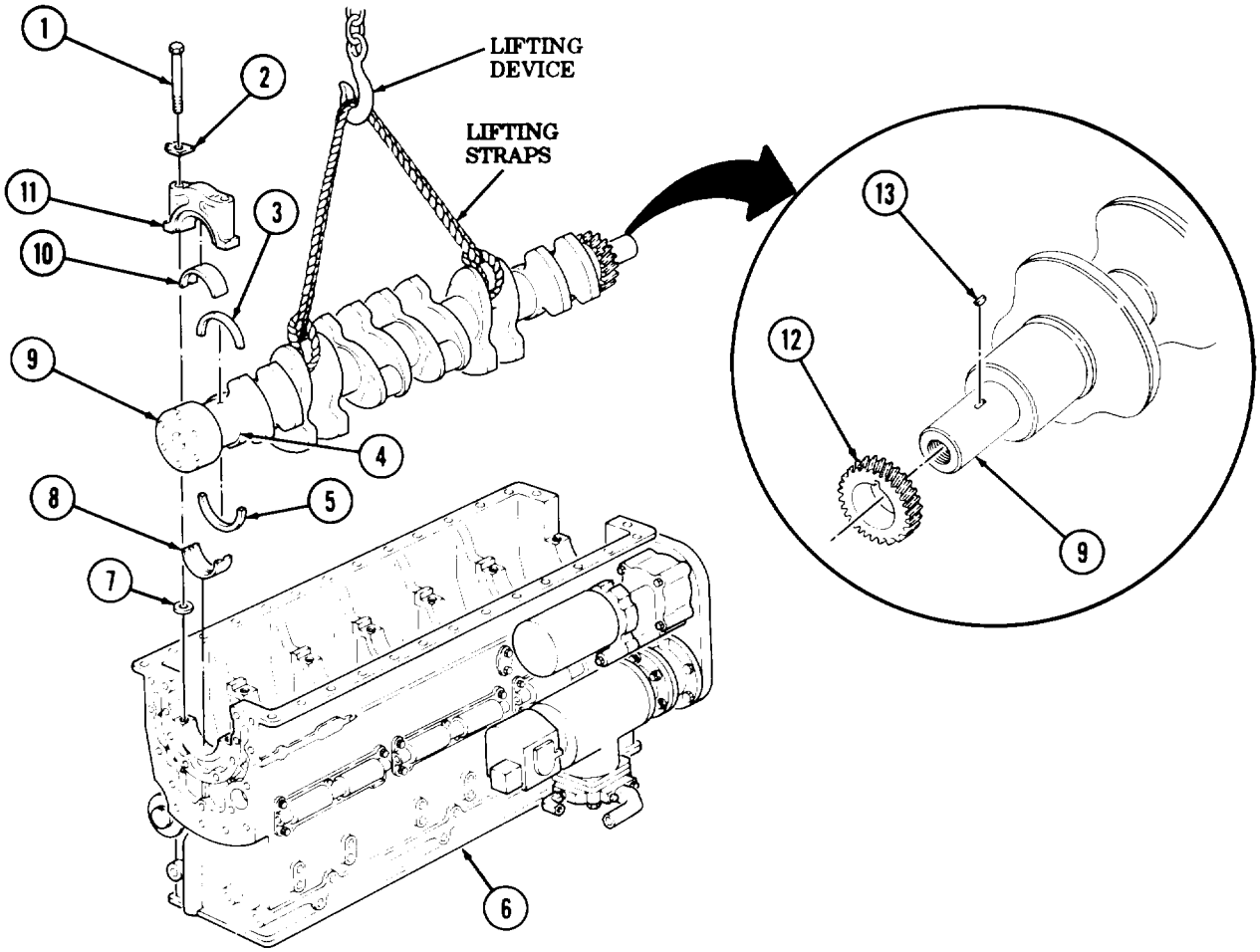

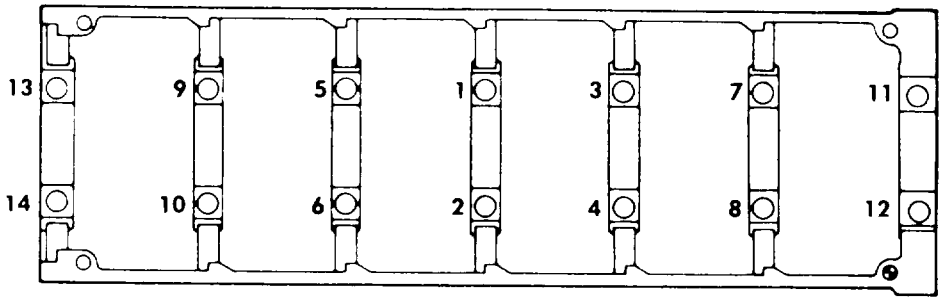

TIGHTENING SEQUENCE

FOLLOW-ON TASKS:
- Install crankshaft flange (para. 3-73).
- Install rear cover and oil seal (para. 3-57).
- Install pistons and connecting rods (para. 3-55).

3-55. PISTON AND CONNECTING ROD INSTALLATION

THIS TASK COVERS:

a. Assembly
b. Installation
c. Connecting Rod Side Clearance

INITIAL SETUP

APPLICABLE MODELS
All

TOOLS
General mechanic's tool kit (Appendix B, Item 1)
Piston ring compressor (Appendix B, Item 15)
Torque wrench, 3/8-in. dr. (Appendix B, Item 4)
Arbor press (Appendix B, Item 7)
Feeler gage (Appendix B, Item 58)

MATERIALS/PARTS
Piston pin bushing (Appendix D, Item **9)**
Piston ring set (Appendix D, Item 486)
Lubricating oil (Appendix C, Item 21)

PERSONNEL REQUIRED
Two

REFERENCES (TM)
TM 9-2320 -260-34P-1

a. Assembly

1. Install alinement pin (7) in connecting rod (6).
2. Using arbor press, install new piston pin bushing (5) in connecting rod (6).
3. Using arbor press, install piston pin (4) in piston (2) and connecting rod (6).
4. Install two retaining rings (3) in piston (2).
5. Install new piston rings (1) on piston (2) in original order.

b. Installation

CAUTION

- Ensure cylinder liner is clean before installing connecting rod and piston.
- Ensure connecting rod and cap are matched set.

NOTE

- Refer to para. 3-47 for cleaning and inspection of piston and connecting rod.
- Connecting rods and pistons are installed the same. This procedure covers installation of one piston and connecting rod,
- Coat parts with clean engine oil before installation.

1. Install bearing shell (9) on connecting rod (6). Ensure tang on bearing shell (9) engages notch on connecting rod (6).

CAUTION

Assistant must guide connecting rod through cylinder from oil pan side of cylinder block to avoid damage to cylinder liner or crankshaft.

NOTE

Ensure numbered side of connecting rod faces camshaft.

2. Install piston ring compressor on piston (2) and insert connecting rod (6) in cylinder (10) until piston ring compressor is seated firmly against cylinder block (8).

3-55. PISTON AND CONNECTING ROD INSTALLATION (Contd)

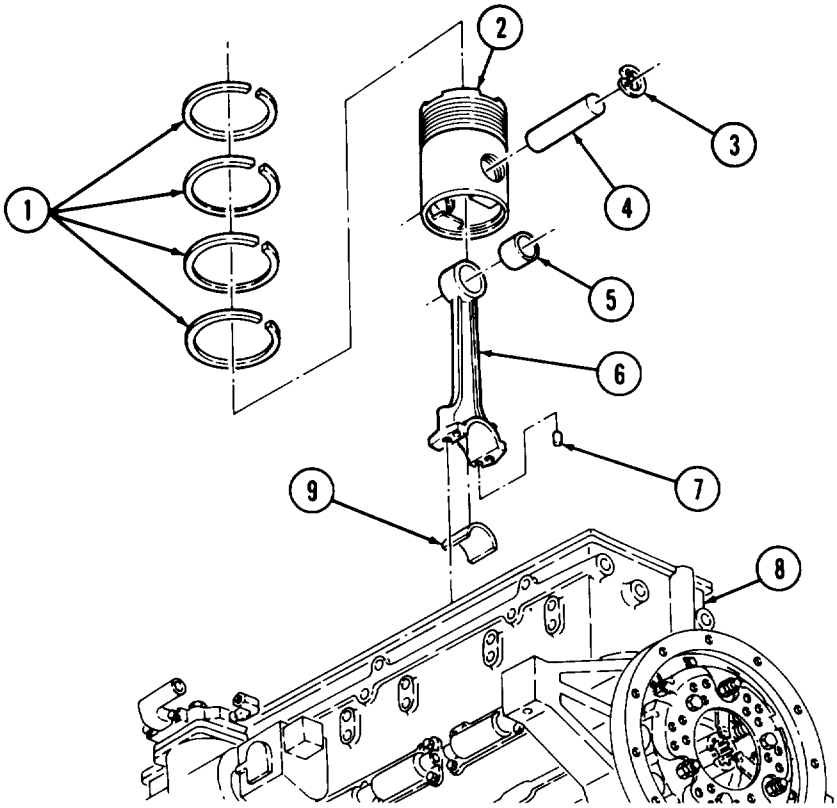

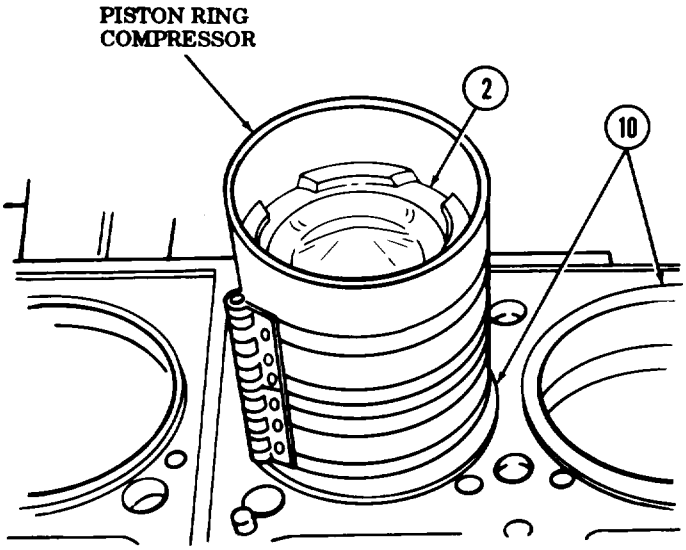

3.55. PISTON AND CONNECTING ROD INSTALLATION (Contd)

CAUTION

Do not force piston into cylinder. If piston does not move freely into cylinder, remove piston and check for broken rings.

3. Push piston (1) into cylinder (2) with hammer handle. Continue pushing until connecting rod (3) seats on crankshaft (4).
4. Install bearing shell (7) on connecting rod cap (5).
5. Install connecting rod cap (5) on crankshaft (4) and connecting rod (3) with two screws (6). Ensure numbers on connecting rod (3) and connecting rod cap (5) match each other and face camshaft.
6. Tighten screws (6) as follows:
   a. Tighten screws (6) 70 lb-ft (95 N•m).
   b. Tighten screws (6) 140 lb-ft (190 N•m).
   c. Loosen screws (6) completely.
   d. Tighten screws (6) 25 lb-ft (34 N•m).
   e. Tighten screws (6) 70 lb-ft (95 N•m).
   f. Tighten screws (6) 140 lb-ft (190 N•m).

c. Connecting Rod Side Clearance

1. Move connecting rod (3) to one side of crankshaft (4). Measure side clearance with feeler gage. Side clearance should be 0.0045-0.0131 in. (0,11-0.33 mm).
2. If clearance is not 0.0045-0.0131 in. (0.11-0.33 mm), remove connecting rod cap (5) and check bearing shells (7) for dirt, burrs, or improper size.
3. Repeat steps 5 and 6 of subtask b. and recheck side clearance.

3-55. PISTON AND CONNECTING ROD INSTALLATION (Contd)

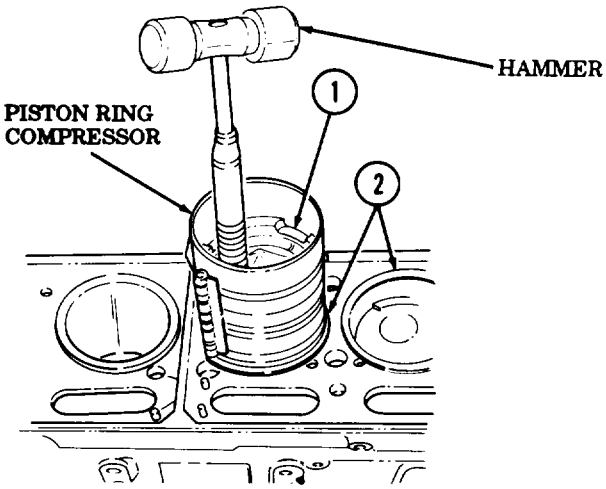

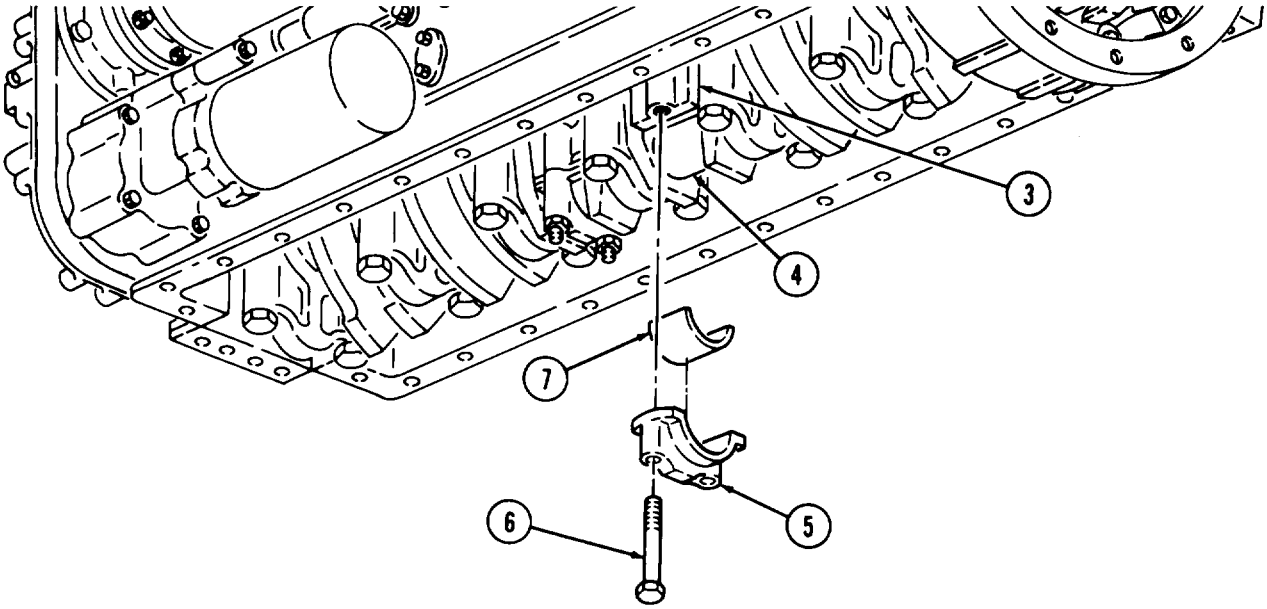

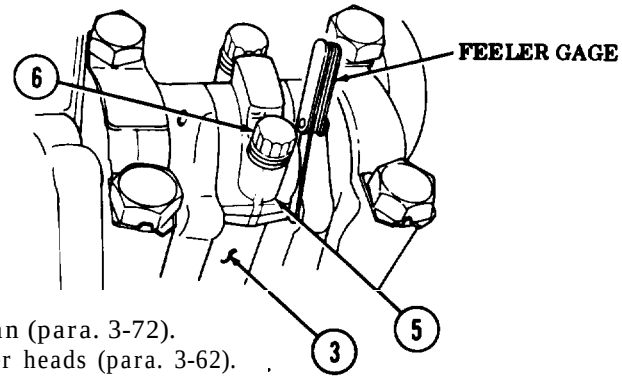

FOLLOW-ON TASKS: • Install oil pan (para. 3-72).
• Install cylinder heads (para. 3-62).

3-56. CAMSHAFT INSTALLATION

THIS TASK COVERS:

Installation

INITIAL SETUP

APPLICABLE MODELS
All

TOOLS
General mechanic's tool kit (Appendix B, Item 1)
Cam bushing replacer (Appendix B, Item 86)
Dial indicator (Appendix B, Item 11)
Welding rod (Appendix B, Item 87)

MATERIALS/PARTS
Lubricating oil (Appendix C, Item 21)

REFERENCES (TM)
TM 9-2320 -260-34P-1

Installation

CAUTION

Positioning of camshaft bushing in No. 7 bushing bore (rear of cylinder block) is important. The new bushing must be pressed in leaving clearance between bushing and rear face of cylinder block to allow oil to drain from hole at rear of camshaft. Hydraulic lock will occur if oil drain passage is blocked.

NOTE

No. 1 cam bushing is wider, all others are the same.

1. Using cam bushing replacer, press seven camshaft bushings (1) into camshaft bore (3) alining oil holes (4) in camshaft bushings (1) to oil holes (2) in camshaft bore (3).
2. Using welding rod, ensure oil holes (2) and (4) aline. If welding rod does not pass through oil holes, reposition camshaft bushing(s) (1).

CAUTION

Use extreme care when installing camshaft. Failure to do so may result in damage to camshaft lobes and bearings.

NOTE

Assistant will help with step 3.

3. Apply lubricating oil to camshaft (6) and camshaft gear (7) and install camshaft (6) and camshaft gear (7) in cylinder block (5).
4. Aline index mark on camshaft gear (7) with index mark on crankshaft gear (8).

3-56. CAMSHAFT INSTALLATION (Contd)

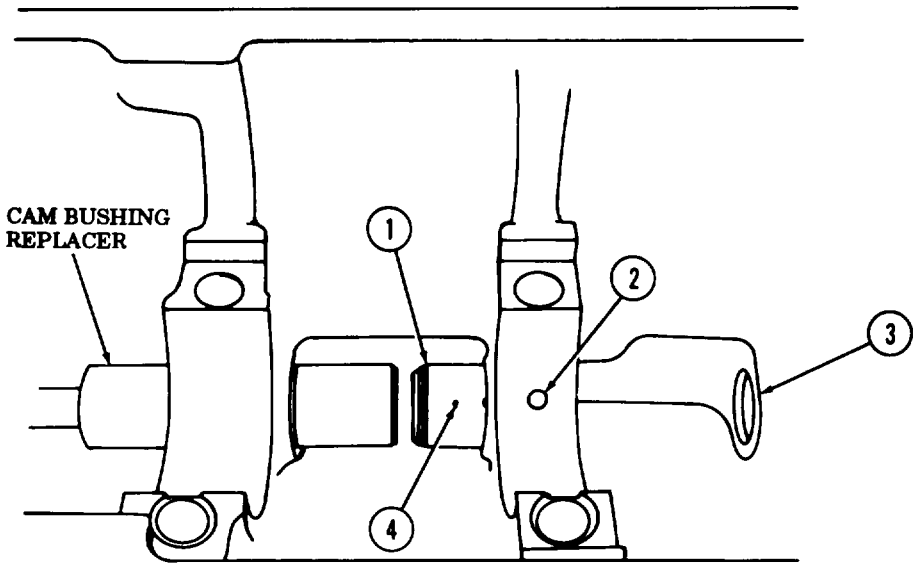

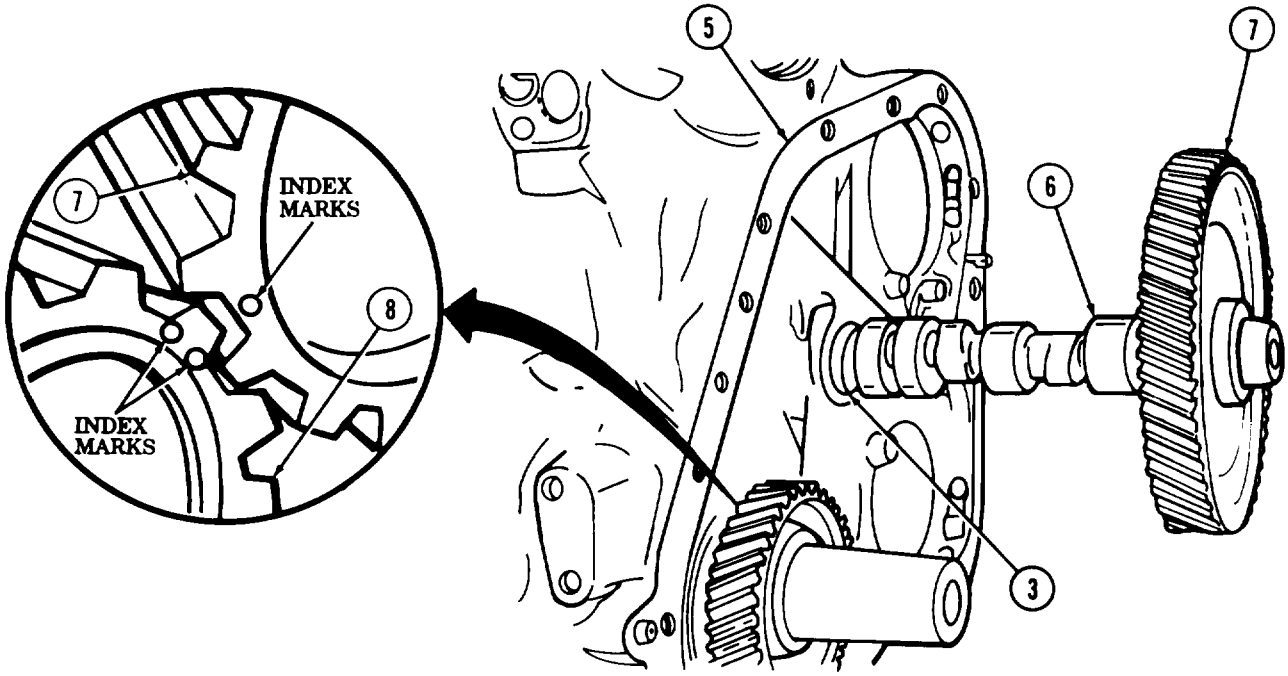

FOLLOW-ON TASKS:
- Install front gear cover (para. 3-71).
- Install accessory drive pulley (para. 3-70).
- Install fan bracket and hub (TM 9-2320-260-20).
- Install crankshaft flange (para. 3-73).
- Install vibration damper (para. 3-74).

3-57. REAR COVER AND OIL SEAL INSTALLATION

THIS TASK COVERS:

Installation

INITIAL SETUP

APPLICABLE MODELS
All

TOOLS
General mechanic's tool kit (Appendix B, Item 1)
Torque wrench, 3/8-in. dr. (Appendix B, Item 4)
Oil seal driver (Appendix B, Item 84)

MATERIALS/PARTS
Gasket (Appendix D, Item 73)
Oil seal (Appendix D, Item 418)
Four lockwashers (Appendix D, Item 217)
O-ring (Appendix D, Item 274)

REFERENCES (TM)
TM 9-2320-260-34 P-1

Installation

1. Install new gasket (10) and rear cover (9) on cylinder block (1) with eight screws (8). Finger tighten screws (8).
2. Install four washers (3), new lockwashers (4), and screws (5) in oil pan (2). Finger tighten screws (5).
3. Install new O-ring (6) in rear cover (9).
4. Using seal driver, install new seal (7) in rear cover (9).
5. Tighten eight screws (8) and four screws (5) 24-29 lb-ft (33-39 N•m).

3-57. REAR COVER AND OIL SEAL INSTALLATION (Contd)

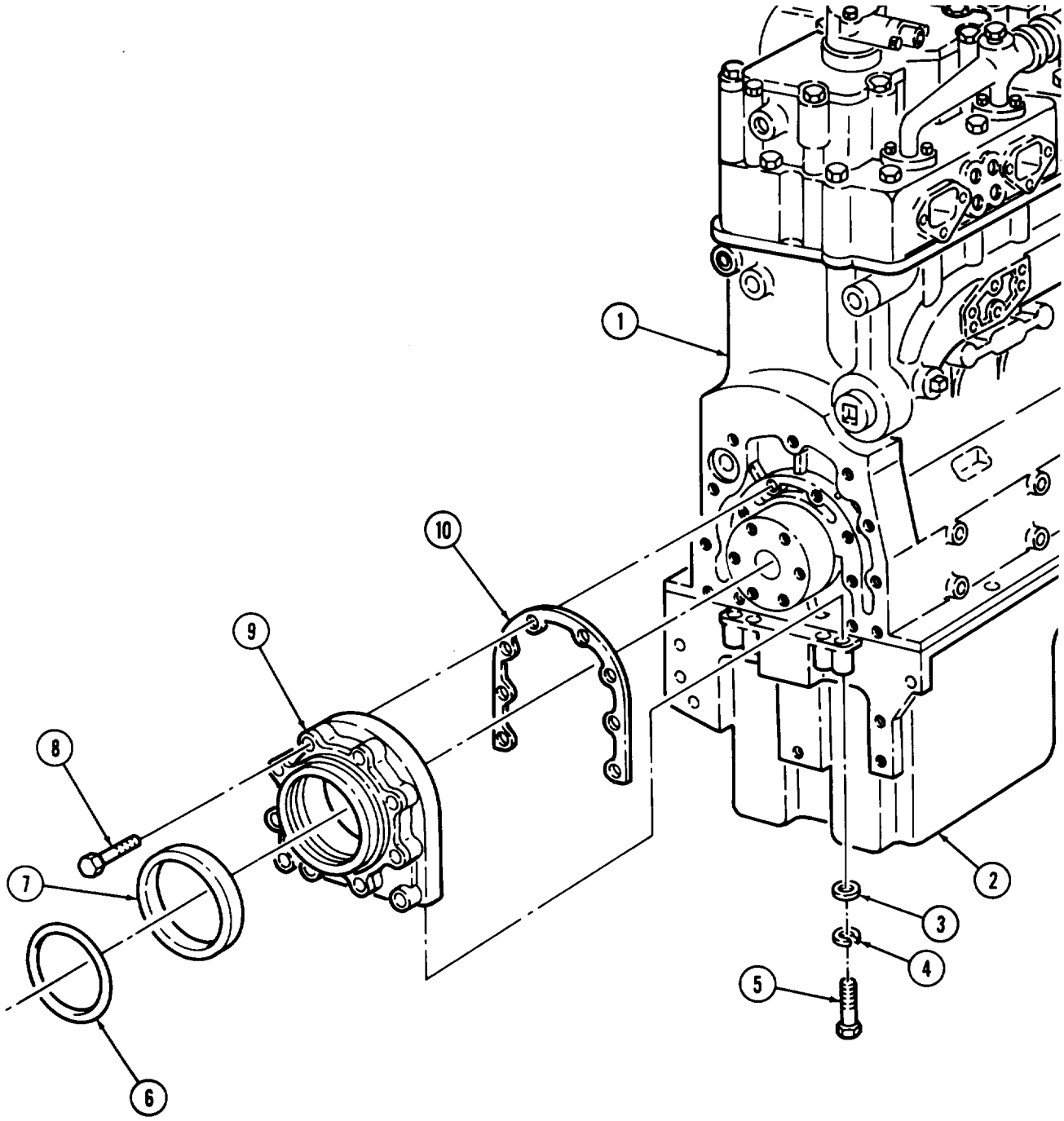

FOLLOW-ON TASK: Install flywheel housing (para. 3-58).

3-58. FLYWHEEL HOUSING INSTALLATION

THIS TASK COVERS:

a. Installation **b. Alinement**

INITIAL SETUP

APPLICABLE MODELS
All

TOOLS
General mechanic's tool kit (Appendix B, Item 1)
Dial indicator attachment (Appendix B, Item 85)
Dial indicator (Appendix B, Item 11)
Soft-head hammer (Appendix B, Item 47)
Torque wrench, 3/8-in. dr. (Appendix B, Item 4)
Drill and reaming fixture (Appendix B, Item 93)
Electric drill (Appendix B, Item 64)

MATERIALS/PARTS
Gasket (Appendix D, Item 75)
Gasket (Appendix D, Item 77)
Nine packings (Appendix D, Item 305)
Sixteen lockwashers (Appendix D, Item 219)
Chalk (Appendix C, Item 7)
Antiseize tape (Appendix C, Item 50)

REFERENCES (TM)
TM 9-2320 -260-34P-1

a. Installation

1. Install new gasket (3) on flywheel housing (2).
2. Install new gasket (4) and access cover (5) on flywheel housing (2) with two screws (6).
3. Wrap male threads of two pipe plugs (1) with antiseize tape and install pipe plugs **(1) on flywheel** housing (2).

NOTE

Perform steps 4 and 5 if dowel pins were removed.

4. Using drill and reaming fixture, ream two holes (13) to next oversize.
5. Install two new dowel pins (12) in cylinder block (7). Ensure new dowel pins (12) are even with or up to 0.010 in. (0.25 mm) below surface of flywheel housing (2) when installed.

NOTE

Assistant will help with step 6.

6. Install flywheel housing (2) on dowel pins (12) and cylinder block (7) with nine new packings (8), sixteen washers (9), new lockwashers (10), and screws (11). Finger tighten screws (11).

b. Alinement

1. Attach dial indicator to crankshaft (15) with dial indicator attachment and position plunger against flywheel inner face (14).
2. Mark flywheel housing (2) with chalk at 3, 6, 9, and 12 o'clock positions.
3. Rotate crankshaft (15) until dial indicator plunger is at 3 o'clock. Zero dial indicator.
4. Turn crankshaft (15) clockwise one rotation. Record highest reading.
5. Turn crankshaft (15) until dial indicator is at the point where highest reading occurred. Set dial indicator to 1/2 highest reading.
6. Using a soft-head hammer, tap on flywheel housing (2) until dial indicator reads zero. Loosen screws (11) slightly if necessary. Finger tighten screws(11) when finished. Flywheel housing (2) is vertically alined.

3-58. FLYWHEEL HOUSING INSTALLATION (Contd)

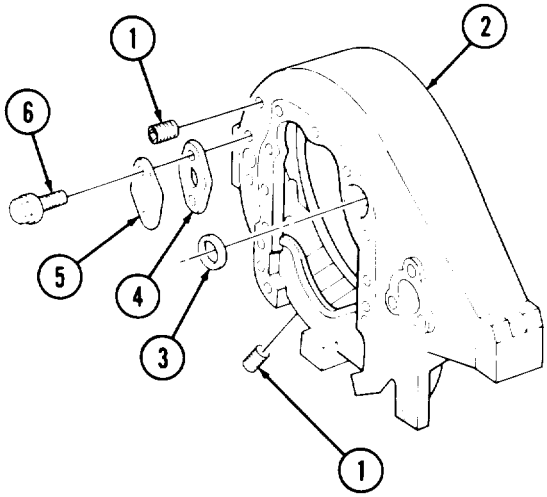

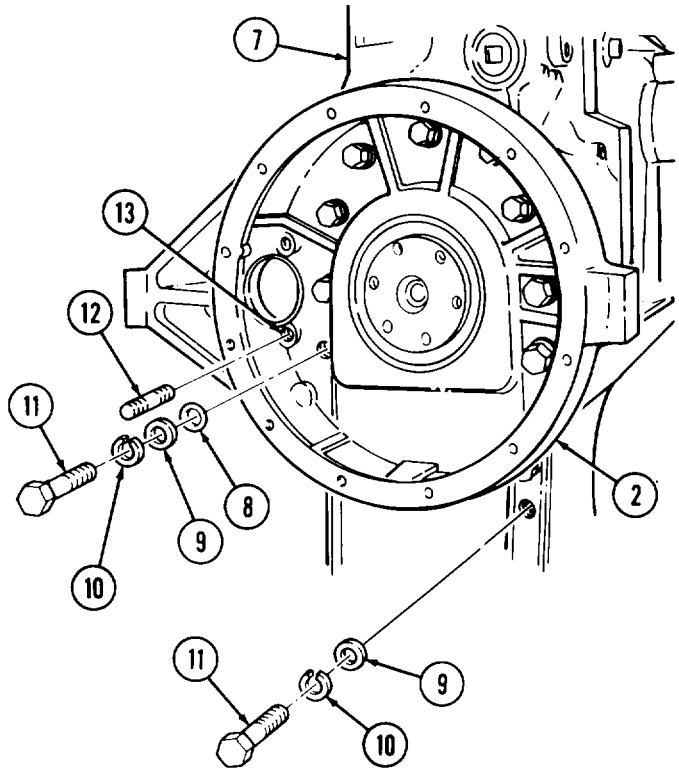

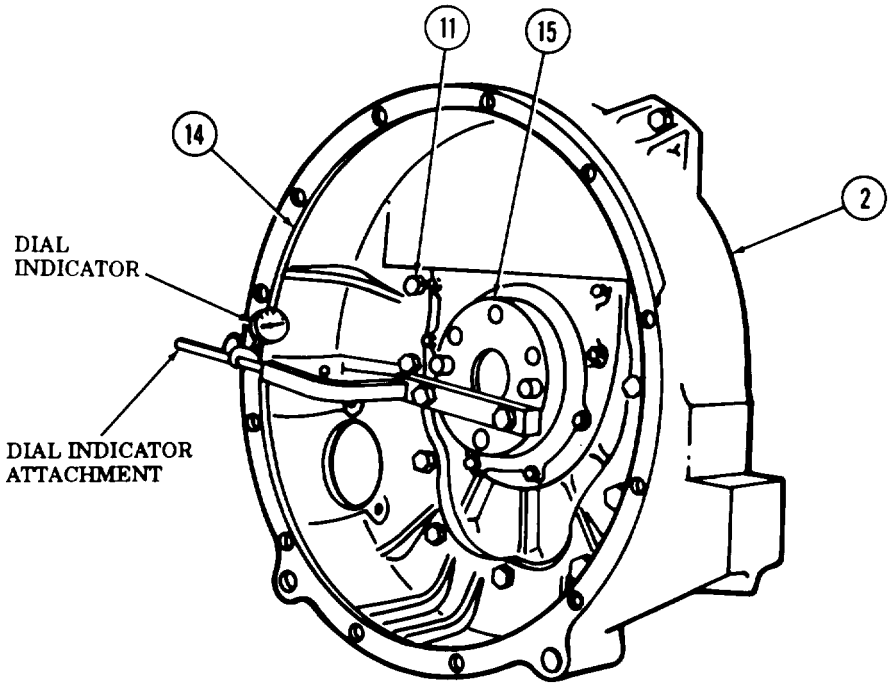

3-58. FLYWHEEL HOUSING INSTALLATION (Contd)

7. Turn crankshaft (2) until dial indicator points to 12 o'clock. Zero dial indicator.
8. Turn crankshaft (2) clockwise one rotation. Record highest reading.
9. Turn crankshaft (2) until dial indicator is at the point where highest reading occurred. Set dial indicator to 1/2 highest reading.
10. Using a soft-head hammer, tap on flywheel housing (3) until dial indicator reads zero. Loosen screws (1) slightly if necessary. Finger tighten screws (1) when finished.
11. Rotate crankshaft (2) once and observe dial indicator. Flywheel housing (3) is horizontally and vertically alined if dial indicator reads 0.008 in. (0.20 mm) or less through full rotation.
12. Remove dial indicator and dial indicator attachment from crankshaft (2).
13. Tighten screws (1) 140-160 lb-ft (190-217 N•m) in sequence.

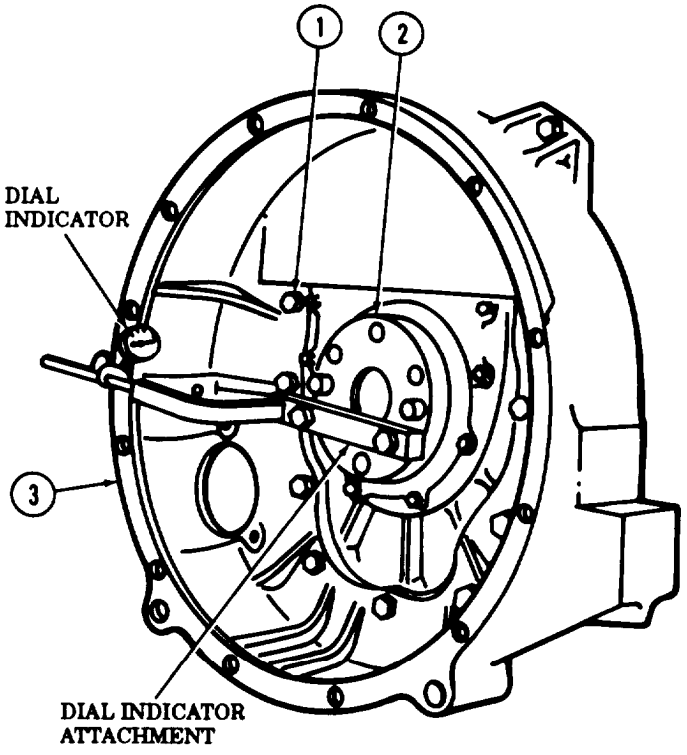

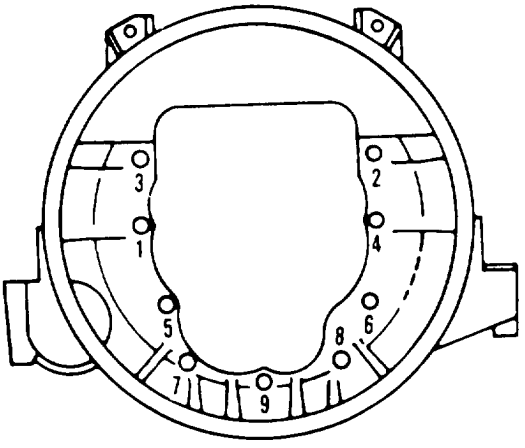

TIGHTENING SEQUENCE

FOLLOW-ON TASK: Install flywheel and clutch (para. 3-59).

3-59. FLYWHEEL AND CLUTCH INSTALLATION

THIS TASK COVERS:

a. Flywheel Installation **b. Clutch Installation**

INITIAL SETUP

APPLICABLE MODELS
All

TOOLS
General mechanic's tool kit (Appendix B, Item 1)
Clutch alinement kit (Appendix B, Item 5)
Torque wrench, 3/4-in. dr. (Appendix B, Item 2)
Two dowel pins (Appendix E, Figure E- 1)

MATERIALS/PARTS
Twelve lockwashers (Appendix D, Item 215)

REFERENCES (TM)
TM 9-2320-260-34P-1

GENERAL SAFETY INSTRUCTIONS
Flywheel is heavy. Use care when installing flywheel.

a. Flywheel Installation

1. Install two dowel pins (2) in crankshaft (3).

WARNING

Flywheel is heavy. Use care when installing flywheel. Failure to do so may result in injury to personnel.

NOTE

Assistant will help with step 2.

2. Position flywheel (1) over dowel pins (2) and install on crankshaft (3) with six washers (4) and screws (5). Tighten screws (5) 200-220 lb-ft (271-298 N•m) in sequence.
3. Remove two dowel pins (2) from crankshaft (3).

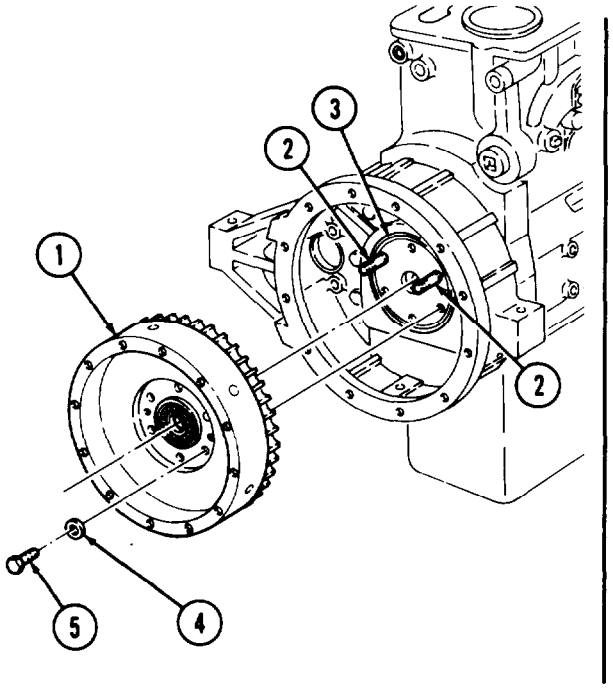

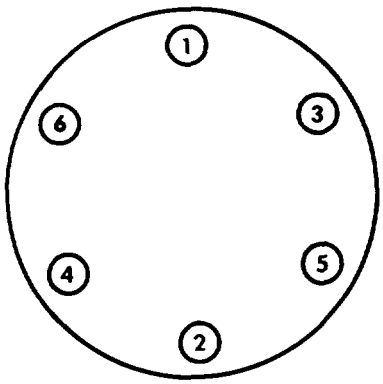

TIGHTENING SEQUENCE

3-59. FLYWHEEL AND CLUTCH INSTALLATION (Contd)

b. Clutch Installation

1. Install clutch alinement tool in center recess of flywheel (3).
2. Install clutch disk (2) and pressure plate (1) on flywheel (3) with twelve new lockwashers (4) and screws (5). Tighten screws (5) 28-32 lb-ft (38-43 N•m) in sequence.
3. Remove clutch alinement tool from flywheel (3).

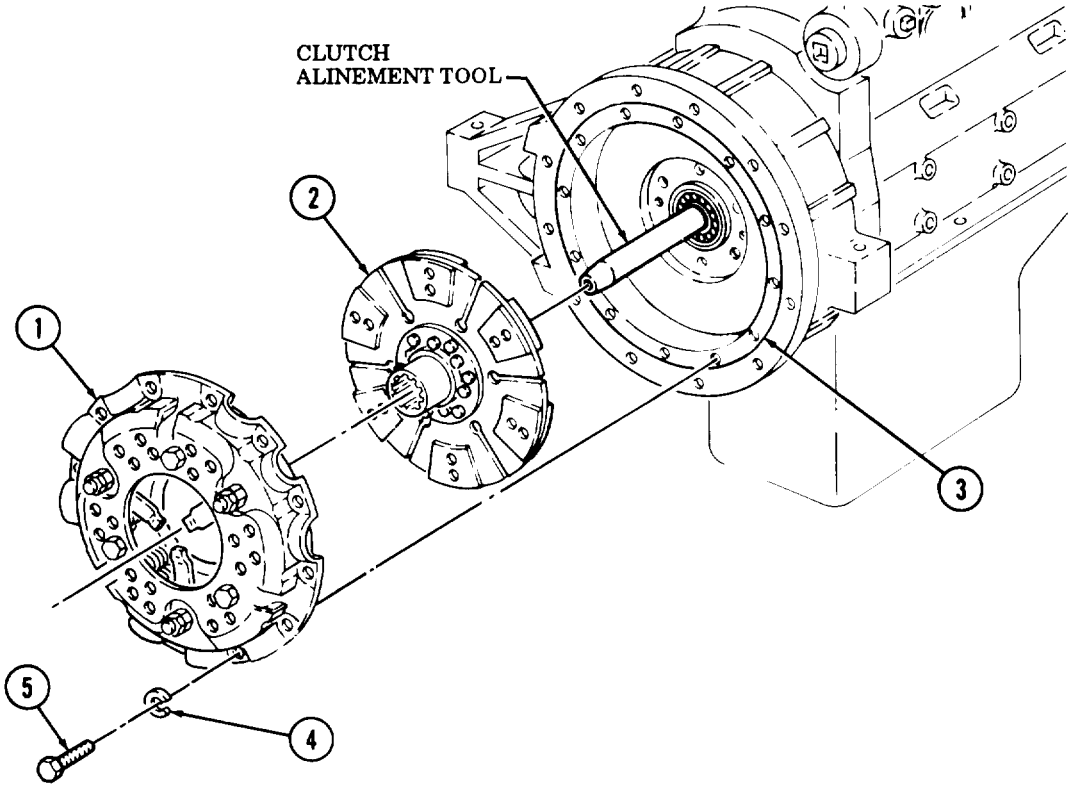

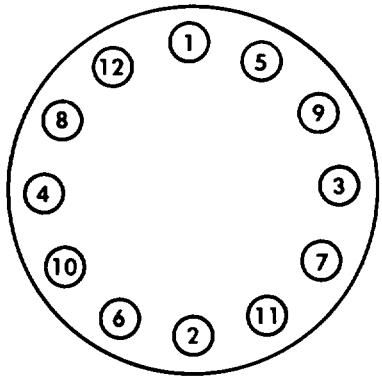

FOLLOW-ON TASK: Remove engine from repair stand (para. 3-75).

3-60. FUEL CROSSOVER CONNECTOR INSTALLATION

THIS TASK COVERS:

Installation

INITIAL SETUP

APPLICABLE MODELS

All

TOOLS

General mechanic's tool kit (Appendix B, Item 1)
Torque wrench, 1/4-in. dr. (Appendix B, Item 105)
Socket driver, 3/8-in. dr. (Appendix B, Item 144)

MATERIALS/PARTS

Eight O-rings (Appendix D, Item 270)
Eight screw-assembled lockwashers (Appendix D, Item 383)
Lubricating oil (Appendix C, Item 21)

REFERENCES (TM)

TM 9-2320-260-34P-1

Installation

NOTE

Ensure plugs are removed from fuel passages before installing fuel crossover connectors.

1. Lubricate eight new O-rings (4) with clean engine oil.
2. Install eight new O-rings (4) and two fuel crossover connectors (2) in cylinder heads (3) with eight new screw-assembled lockwashers (1).
3. Tighten screw-assembled lockwashers (1) alternately 34-38 lb-in. (3.8-4.3 N•m).

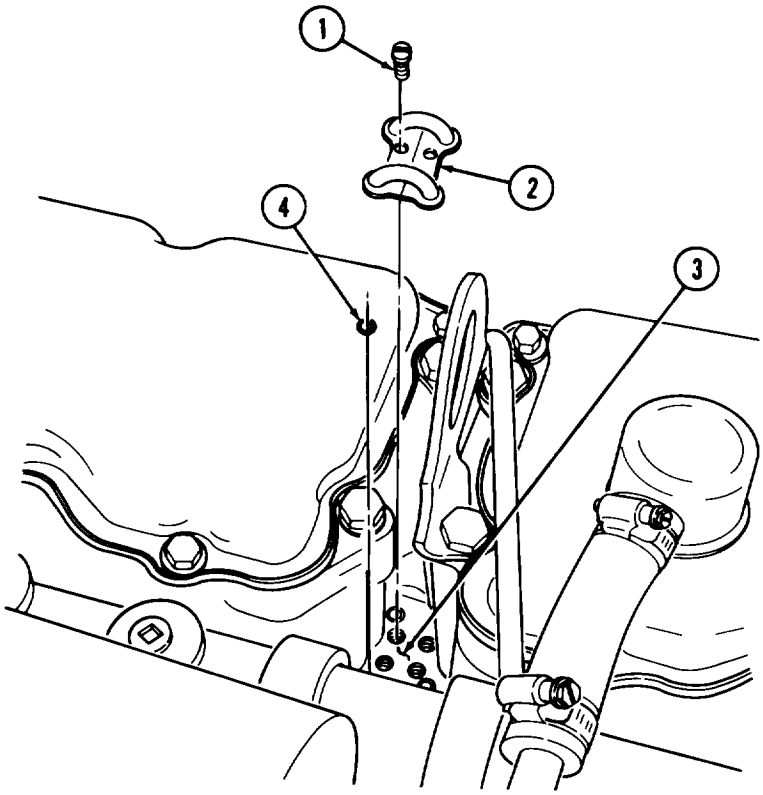

FOLLOW-ON TASK: Remove engine from repair stand (para. 3-75).

3-61. CAM FOLLOWER INSTALLATION

THIS TASK COVERS:

Installation

INITIAL SETUP

APPLICABLE MODELS
All

TOOLS
General mechanic's tool kit (Appendix B, Item 1)
Torque wrench, 3/8-in. dr. (Appendix B, Item 4)
Soft-head hammer (Appendix B, Item 47)

MATERIALS/PARTS
Gasket set (Appendix D, Item 483)
Lubricating oil (Appendix C, Item 21)

REFERENCES (TM)
TM 9-2320-260-34P-1

Installation

CAUTION

- Lubricate cam followers with lubricating oil before installation. Failure to do so may result in damage to equipment.
- If old cam follower housings are being installed, ensure they are installed in the same location from which they were removed. Failure to do so may result in damage to equipment.
- Ensure new gaskets measure exact thickness of old gasket.

1. Check recorded measurement of gasket (3) removed. Gasket (3) should measure between 0.014-0.125 in. (0.36-3.2 mm).
2. Measure new gasket (3) being installed. New gasket (3) must be exactly the same size as the old gasket (3).
3. Position gasket (3) over two dowels (1) with seal facing away from cylinder block (2).
4. Install cam follower (6) and housing (4) on cylinder block (2) with six screws (5). Tap housing (4) lightly with soft-head hammer to seat housing (4) against cylinder block (2).
5. Tighten screws (5) 15 lb-ft (20 N•m) in sequence. Then tighten screws (5) to 30-35 lb-ft (41-47 N•m) in sequence.

3-61. CAM FOLLOWER INSTALLATION (Contd)

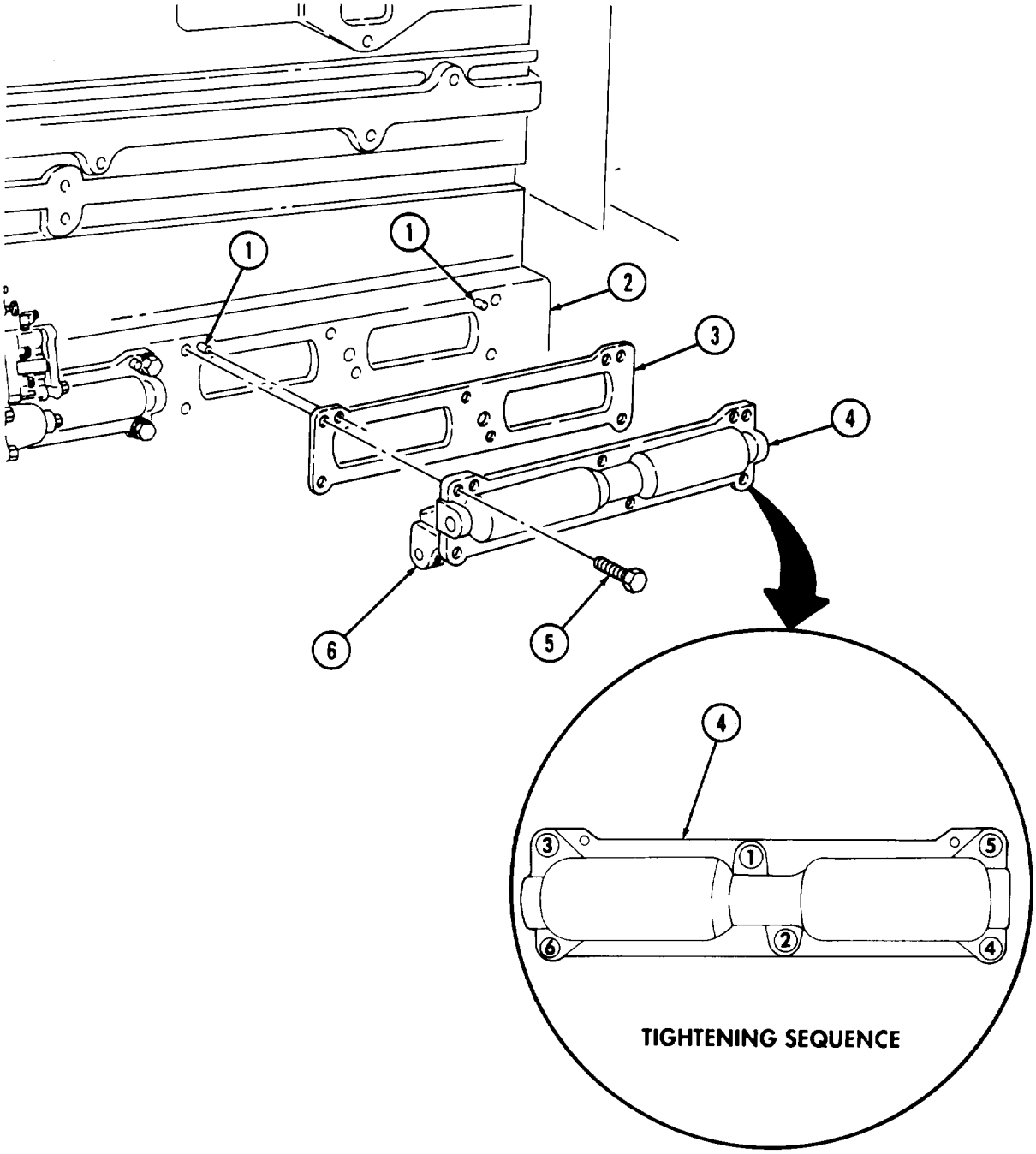

FOLLOW-ON TASKS:
- Install accessory drive (para. 3-69).
- Install fuel pump (para. 5-12).
- Install rocker lever housings and push tubes (para. 3-64).

3-62. CYLINDER HEAD INSTALIATION

THIS TASK COVERS:

Installation

INITIAL SETUP

APPLICABLE MODELS

All

TOOLS

General mechanic's tool kit (Appendix B, Item 1)
Torque wrench, 3/4-in. dr. (Appendix B, Item 2)
1-1/16-in. socket, 3/4-in. dr. (Appendix B, Item 68)
Two guide screws (Appendix E, Figure E-5)

MATERIALS/PARTS

Gasket (Appendix D, Item 89)
Lubricating oil (Appendix C, Item 21)

REFERENCES (TM)

TM 9-2320 -260-34P-1

Installation

NOTE

Ensure mating surface of cylinder head is flat and polished smooth.

1. Install cylinder head gasket (4) over two dowels (6) with side marked TOP facing up.
2. Install two guide screws (5) into cylinder block (7).
3. Install cylinder head (3) on cylinder block (7).
4. Lubricate threads of ten screws (1) with clean engine oil.
5. Install ten washers (2) and screws (1) in cylinder head (3) and cylinder block (7). Do not tighten screws (1).
6. Remove two guide screws (5) from cylinder head (3).
7. Install two washers (2) and screws (1) in cylinder head (3) and cylinder block (7). Do not tighten screws (1).
8. Tighten twelve screws (1) in sequence:
   a. 20-25 lb-ft (27-34 N•m).
   b. 80-100 lb-ft (108-136 N•m).
   c. 265-305 lb-ft (359-414 N•m).

3-62. CYLINDER HEAD INSTALLATION (Contd)

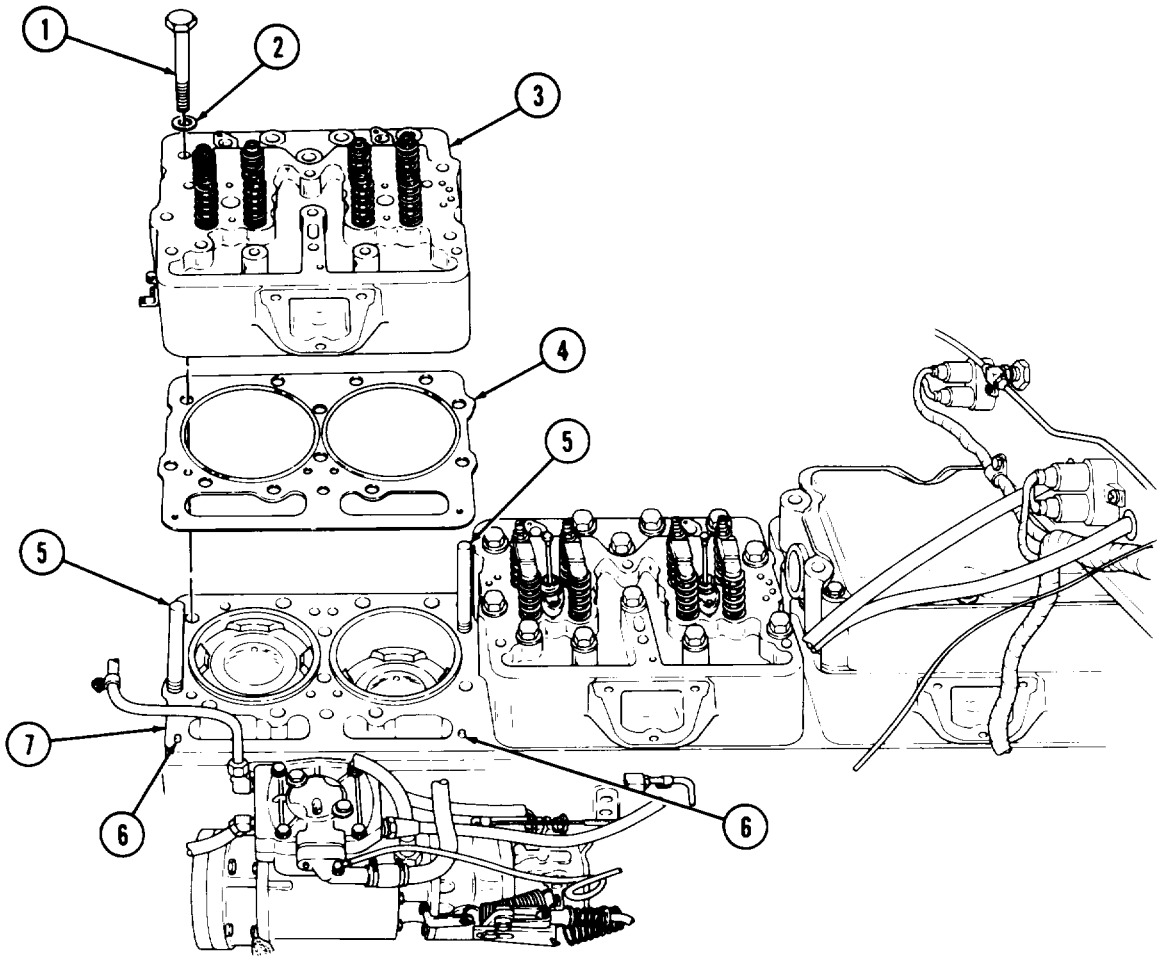

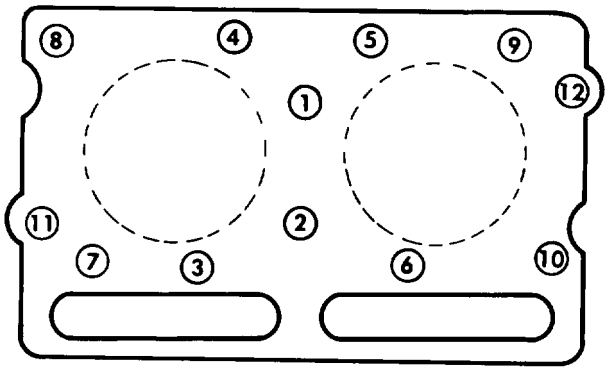

TIGHTENING SEQUENCE

FOLLOW-ON TASKS:
- Install fuel crossover connectors (para. 3-60).
- Install rocker lever housings and push tubes (para. 3-64).
- Install crossheads (para. 3-63).
- Install intake manifold (para. 3-67).

3-63. CROSSHEAD INSTALLATION

THIS TASK COVERS:

Installation

INITIAL SETUP

APPLICABLE MODELS
All

TOOLS
General mechanic's tool kit (Appendix B, Item 1)
Torque wrench, 3/8-in. dr. (Appendix B, Item 4)
Dial indicator (Appendix B, Item 11)
Wire gage (Appendix B, Item 94)

MATERIALS/PARTS
Lubricating oil (Appendix C, Item 21)

REFERENCES (TM)
TM 9-2320-260-34 P-1

Installation

1. Loosen adjusting screw (2) one full turn.
2. Install crosshead (3) on guide (5) so crosshead (3) touches valve stem (4) on side opposite adjusting screw (2).
3. Turn adjusting screw (2) until it touches valve stem (6).
4. Position dial indicator over center of crosshead (3). Zero dial indicator.
5. Holding crosshead (3) down lightly, turn adjusting screw (2) until dial indicator reads 0.020-0.040 in. (0.51-1.0 mm). Tighten jamnut (1) 22-26 lb-ft (30-35 N•m).
6. Using wire gage, measure gap (7). Measurement must be a minimum of 0.025 in. (0.64 mm). Loosen jamnut (1) and turn adjusting screw (2) clockwise. Tighten jamnut (1) 22-26 lb-ft (30-35 N•m).
7. Repeat step 6 until gap (7) is correct.
8. Remove dial indicator from cylinder head (8).

3-63. CROSSHEAD INSTALLATION (Contd)

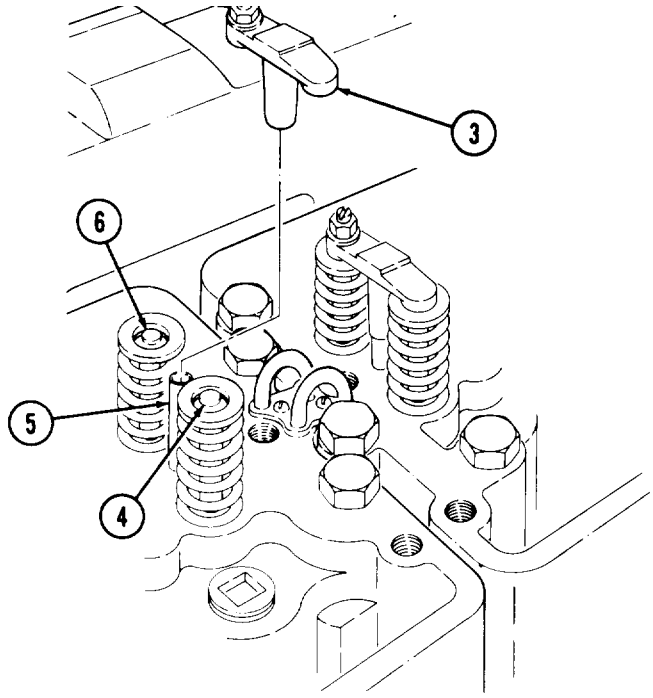

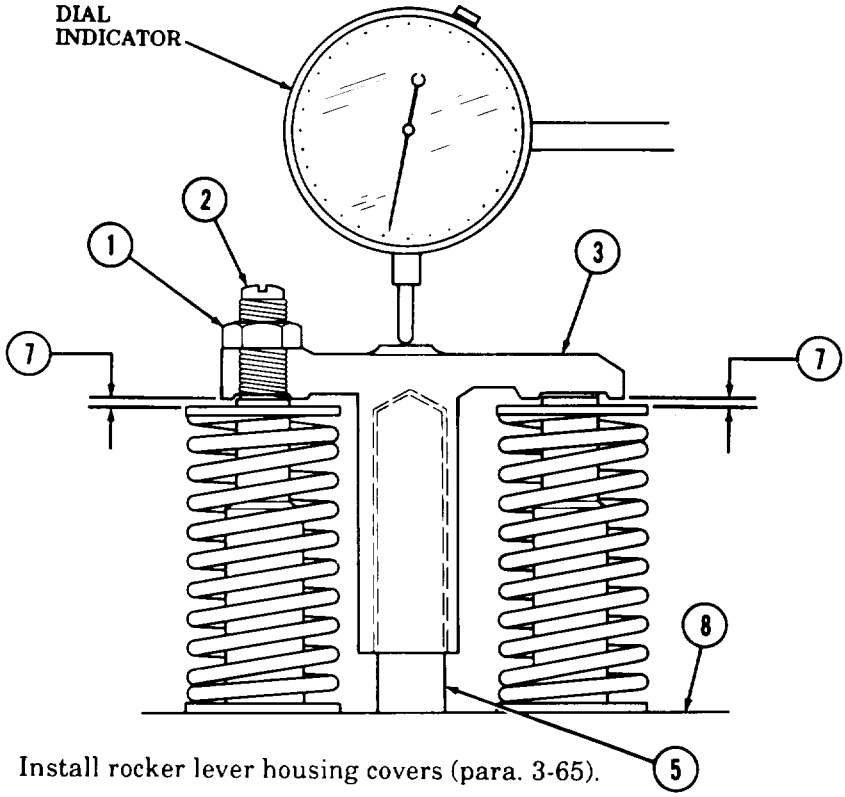

FOLLOW-ON TASK: Install rocker lever housing covers (para. 3-65).

3-64. ROCKER LEVER HOUSINGS AND PUSH TUBES INSTALLATION

THIS TASK COVERS:

Installation

INITIAL SETUP

APPLICABLE MODEIS

All

TOOLS

General mechanic's tool kit (Appendix B, Item 1)
Torque wrench, 3/8-in. dr. (Appendix B, Item 4)

MATERIALS/PARTS

Three gaskets (Appendix D, Item 91)
Four lockwasher (Appendix D, Item 223)

REFERENCES (TM)

TM 9-2320-260-34 P-1

Installation

CAUTION

- Do not mix push tubes during installation. The injector tube is the longest and installs between the intake and exhaust push tubes. Intake and exhaust push tubes are identical. Mixing push tubes may cause damage to equipment.
- The fit of push tube ball ends into cam follower sockets is critical. Perform several visual checks during installation to ensure push tubes remain properly seated.

NOTE

- On late model engines, many lockwashers have been replaced by screw-assembled washers.
- All rocker lever housings are installed essentially the same. This procedure covers one rocker lever housing.

1. Install six push tubes (6) in cylinder head (8).
2. Install gasket (9) and rocker lever housing (10) on cylinder head (8).

NOTE

Perform step 3 for front rocker lever housing only.

3. Install radiator bracket (11) on rocker lever housing (10) with two screw-assembled washers (1). Do not tighten screw-assembled washers (1).
4. Install engine lift bracket (5) on rocker lever housings (7) and (10) with two new lockwashers (4) and screws (3). Do not tighten screws (3).
5. Install four screw-assembled washers (2) in remaining screw holes in rocker lever housing (10).
6. Tighten screw-assembled washers (1) and (2) and screws (3) in rocker lever housing (10) 55-65 lb-ft (75-88 N•m) in sequence.

3-64. ROCKER LEVER HOUSINGS AND PUSH TUBES INSTALLATION (Contd)

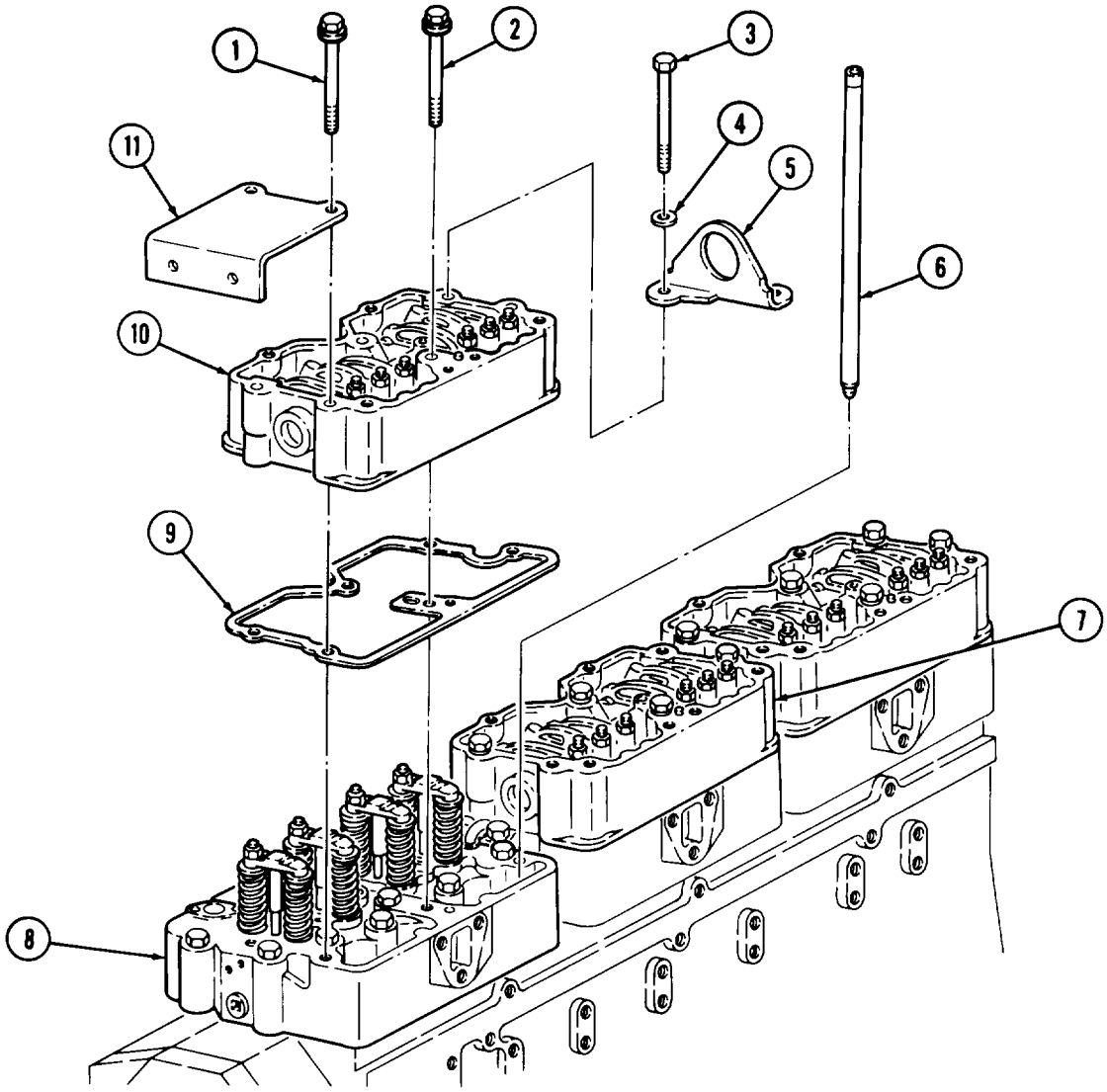

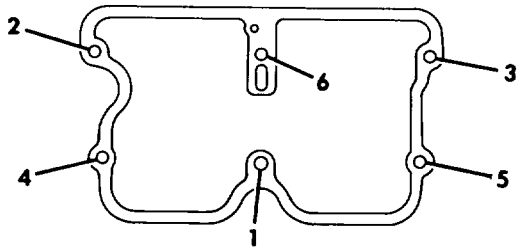

TIGHTENING SEQUENCE

FOLLOW-ON TASK: Install rocker lever housing covers (para. 3-65).

3-65. ROCKER LEVER HOUSING COVERS INSTALLATION

THIS TASK COVERS:

Installation

INITIAL SETUP

APPLICABLE MODELS
All

TOOLS
General mechanic's tool kit (Appendix B, Item 1)
Torque wrench, 3/8-in. dr. (Appendix B, Item 4)

MATERIALS/PARTS
Gasket (Appendix D, Item 103)

REFERENCES (TM)
TM 9-2320 -260-34P-1

Installation

CAUTION

Ensure gasket mating surfaces are clean and free of foreign material. Failure to do so may result in damage to equipment.

NOTE

All rocker lever housing covers are installed the same. This procedure covers the installation of one cover.

1. Install new gasket (3) and rocker lever housing cover (4) on rocker lever housing (2) with five screws (1).
2. Tighten screws (1) alternately 10-15 lb-ft. (14-20 N•m).

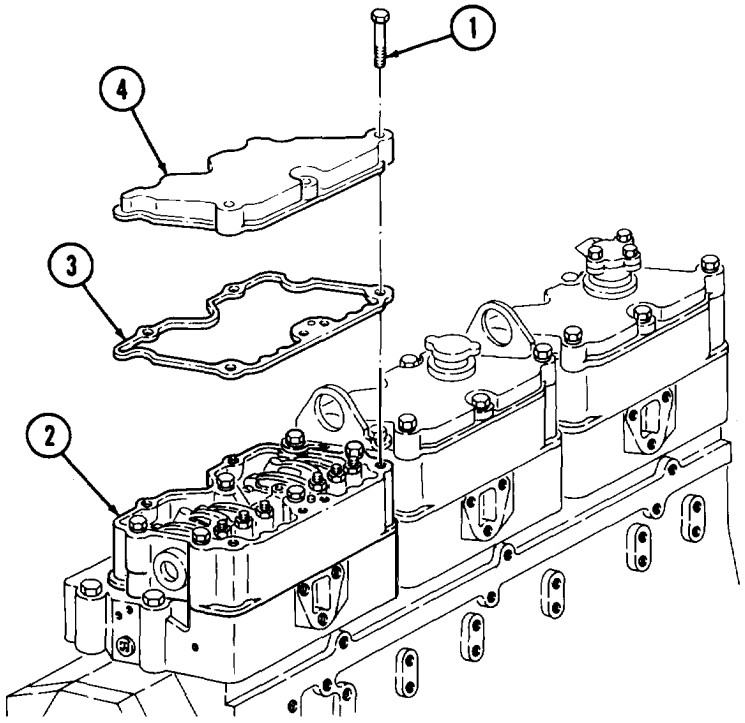

FOLLOW-ON TASK: Remove engine from repair stand (para. 3-75).

3-66. ENGINE LIFTING BRACKETS INSTALLATION

THIS TASK COVERS:

Installation

INITIAL SETUP

APPLICABLE MODELS
All

TOOLS
General mechanic's tool kit (Appendix B, Item 1)
Torque wrench, 3/8-in. dr. (Appendix B, Item 4)

MATERIALS/PARTS
Two lockwashers (Appendix D, Item 223)

REFERENCES (TM)
TM 9-2320 -260-34P-1

Installation

NOTE

Both engine lifting brackets are installed the same. This procedure covers one engine lifting bracket.

1. Install engine lifting bracket (2) on rocker lever housing (3) with two new lockwashers (4) and screws (1).
2. Tighten screws (1) alternately 55-65 lb-ft (75-88 N·m).

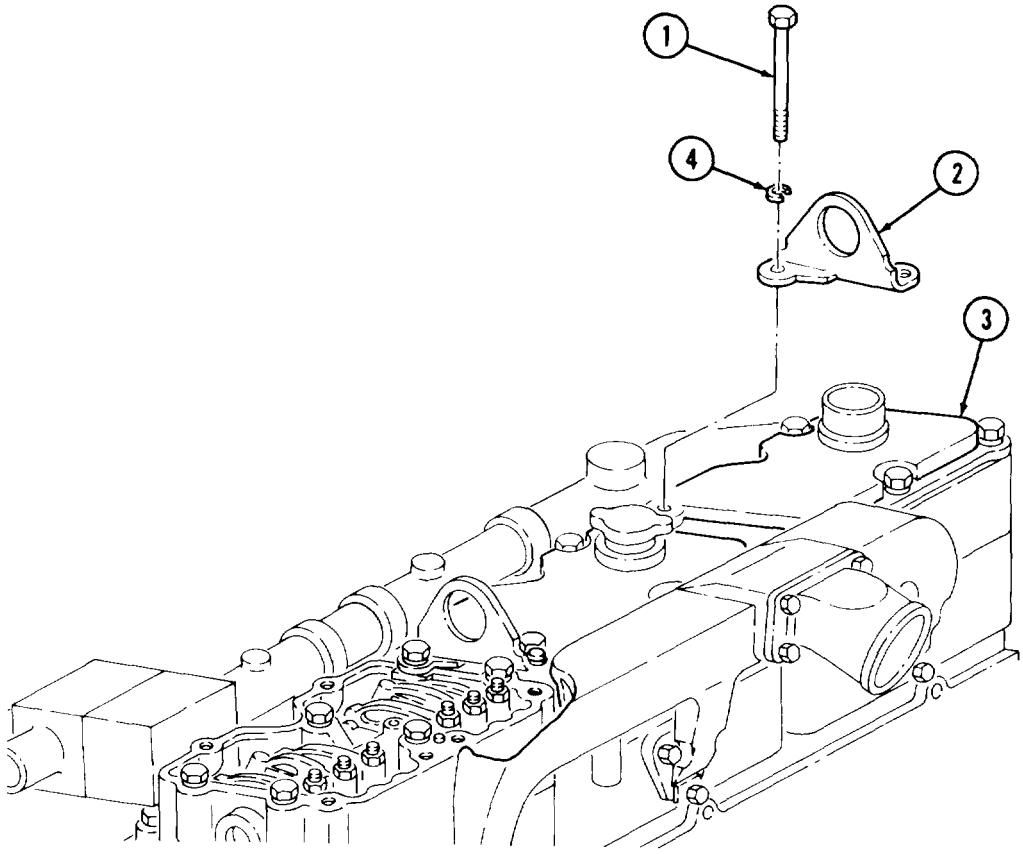

FOLLOW-ON TASK: Remove engine from repair stand (para. 3-75).

3-67. INTAKE MANIFOLD INSTALLATION

THIS TASK COVERS:

Installation

INITIAL SETUP

APPLICABLE MODEIS
All

TOOLS
General mechanic's tool kit (Appendix B, Item 1)
Torque wrench, 318-in. dr. (Appendix B, Item 4)

MATERIALS/PARTS
Nine lockwashers (Appendix D, Item 217)
Three gaskets (Appendix D, Item 105)

REFERENCES (TM)
TM 9-2320-260-20
TM 9-2320-260-34P-1

Installation

NOTE

Screw-assembled lockwashers are used to install intake manifold on Cummins NHC-250 engines built after S/N 10448850.

1. Install three new gaskets (3), intake manifold (4), and two clamps (10) on cylinder heads (2) with nine washers (5), new lockwashers (7), and screws (6). Tighten screws (6) 20 lb-ft (27 N•m).
2. Connect air inlet tube (9) to intake manifold outlet (8) with clam (1).

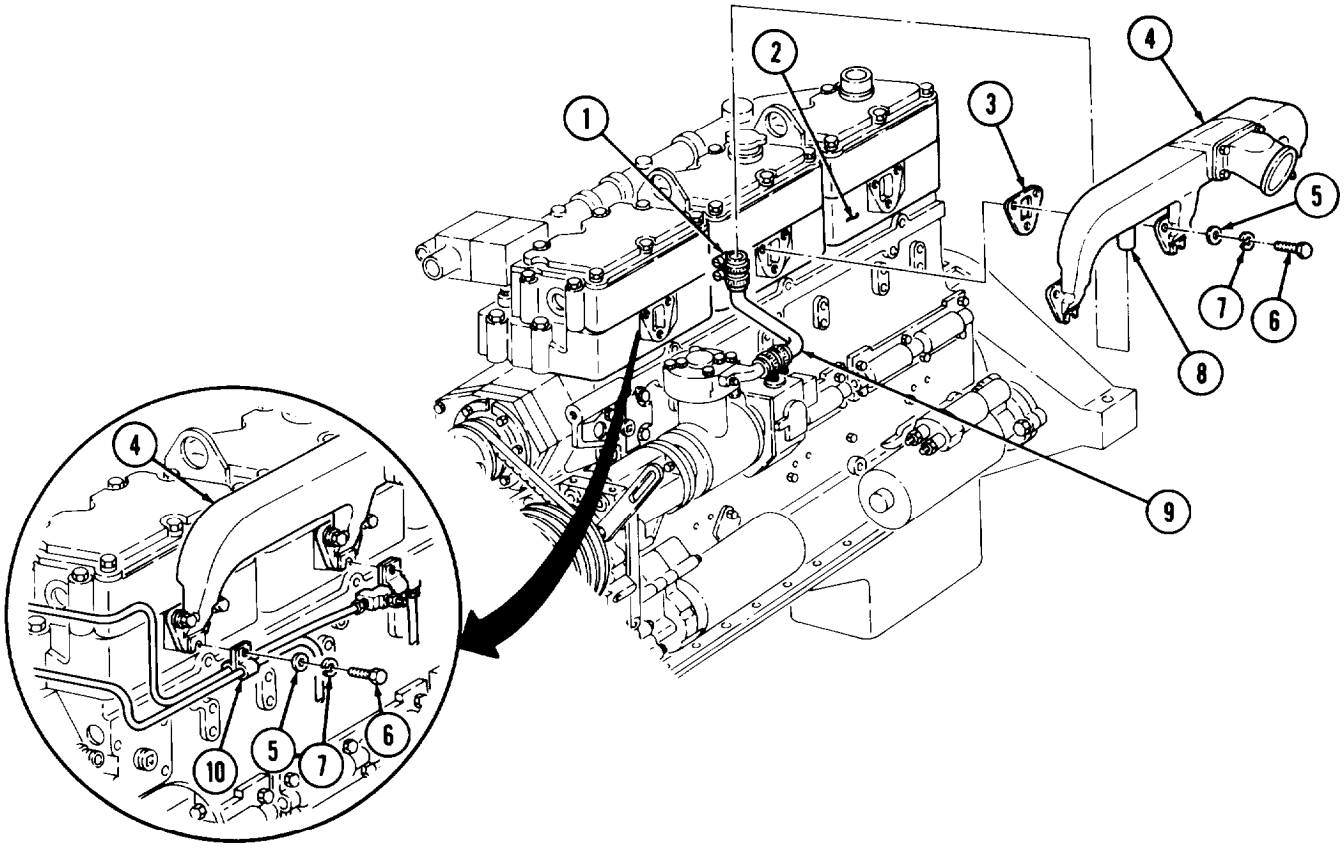

FOLLOW-ON TASKS: • Install glow plug and preheater nozzle (TM 9-2320-260-20).
• Remove engine from repair stand (para. 3-75).

3-68. OIL PUMP INSTALLATION

THIS TASK COVERS:

Installation

INITIAL SETUP

APPLICABLE MODELS
All

TOOL.S
General mechanic's tool kit (Appendix B, Item 1)
Torque wrench, 318-in. dr. (Appendix B, Item 4)

MATERIALS/PARTS
Two lockwashers (Appendix D, Item 217)
Gasket (Appendix D, Item 107)

REFERENCES (TM)
TM 9-2320-260-20
TM 9-2320-260-34 P-1

Installation

CAUTION

Use of incorrect screws can cause damage to equipment.

1. Install new gasket (7) and oil pump (4) on cylinder block (10) with two screws (8), new lockwashers (9), screws (3), and screw-assembled washer (5). Ensure oil pump gear teeth aline with camshaft gear teeth.
2. Tighten screws (3), and (8), and screw-assembled washer (5) 35-45 lb-ft (41-61 N•m).
3. Install front sump tube (6) on oil pan (1) and oil pump (4).
4. Connect oil pump return hose (11) to oil pump (4).
5. Connect oil pump pickup hose (2) to oil pump (4).

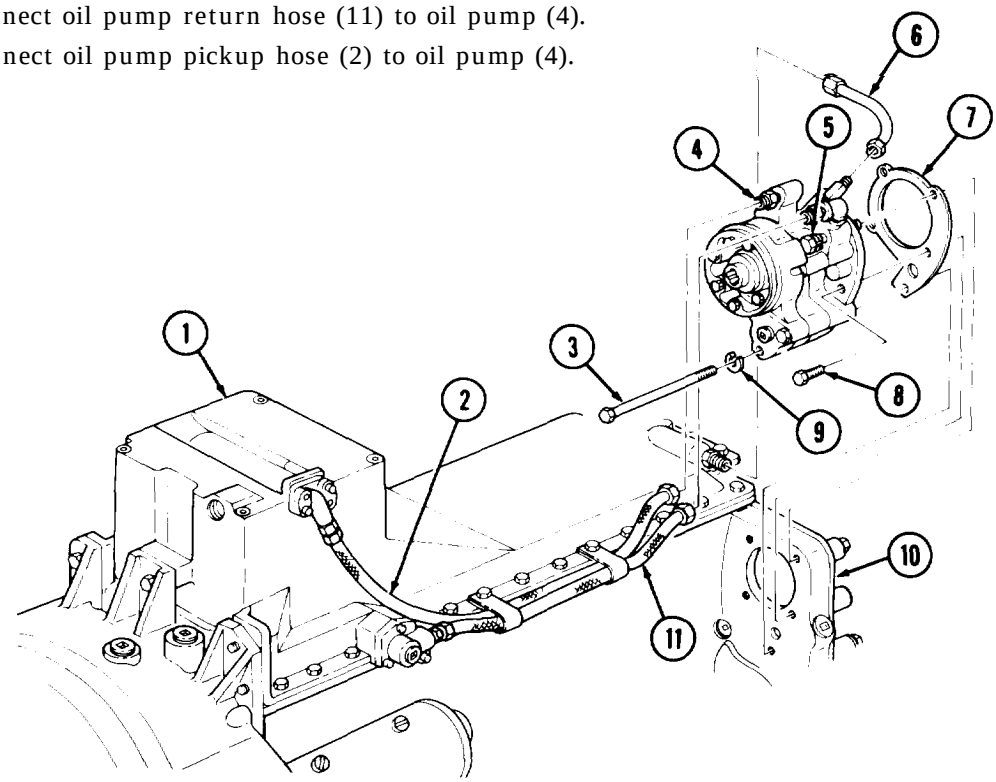

FOLLOW-ON TASKS:
- Install oil filter (TM 9-2320-260-20).
- Remove engine from repair stand (para. 3-75).

3-69. ACCESSORY DRIVE INSTALLATION

THIS TASK COVERS:

Installation

INITIAL SETUP

APPLICABLE MODEIS

All

TOOLS

General mechanic's tool kit (Appendix B, Item 1)
Torque wrench, 3/8-in. dr. (Appendix B, Item 4)
Engine barring tool (Appendix B, Item 66)

MATERIALS/PARTS

Five screw-assembled lockwashers (Appendix D, Item 399)
Gasket (Appendix D, Item 109)

REFERENCES (TM)

TM 9-2320-260-34P-1

Installation

1. Using engine barring tool, rotate engine crankshaft until number one cylinder is at top dead center (TDC) of compression stroke.
2. Rotate engine crankshaft 90° past TDC.

CAUTION

Accessory drive gear and camshaft gear timing marks must be properly alined for engine to operate.

3. Remove pipe plug (3) from front gear cover (1).
4. Position new gasket (5) and accessory drive (7) on cylinder block (4), Ensure timing marks on drive gear (6) are alined with timing marks on camshaft gear (9) in hole (2) on front gear cover (1).
5. Install accessory drive (7) with five new screw-assembled lockwashers (8).
6. Install pipe plug (3) in front gear cover (1).
7. Tighten screw-assembled lockwashers (8) 40-45 lb-ft (54-61 N•m).

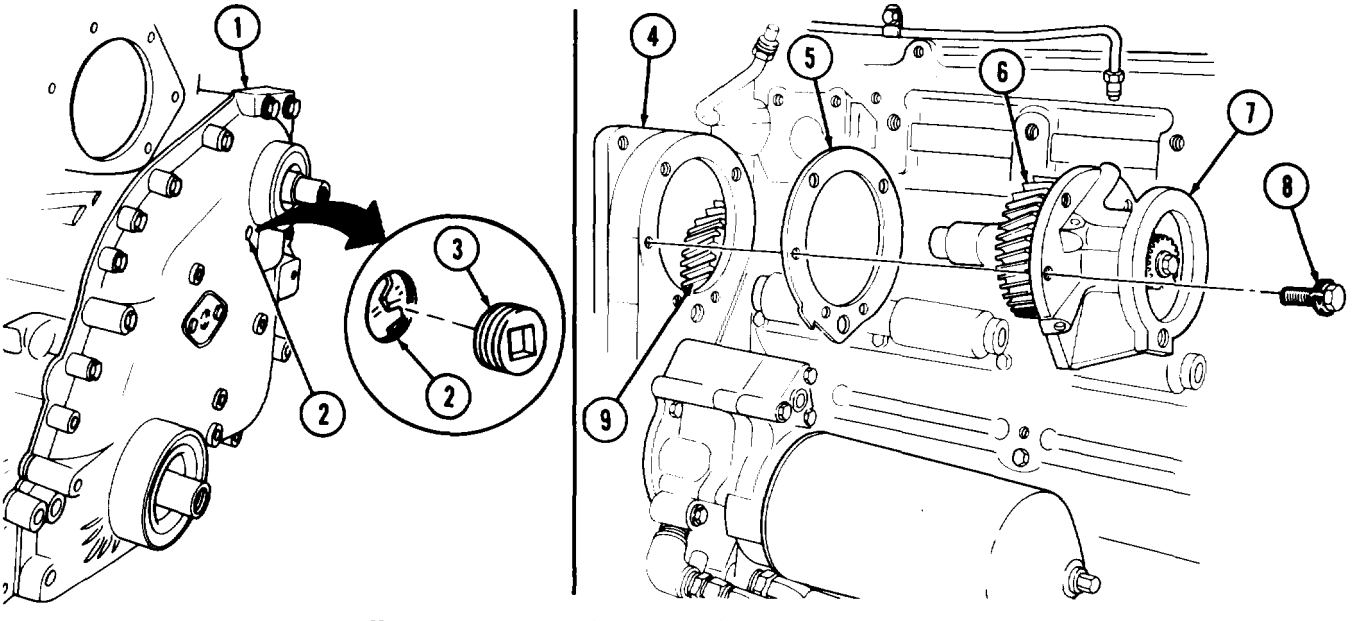

FOLLOW-ON TASKS: • Install air compressor (para. 11-3).
• Install accessory drive pulley (para. 3-70).

3-70. ACCESSORY DRIVE PULLEY INSTALLATION

THIS TASK COVERS:

Installation

INITIAL SETUP

APPLICABLE MOOELS
All

TOOLS
General mechanic's tool kit (Appendix B, Item 1)
Torque wrench, 1/2-in. dr. (Appendix B, Item 3)
Engine barring tool (Appendix B, Item 66)

MATERIALS/PARTS
Pin (Appendix D, Item 316)
Antiseize tape (Appendix C, Item 50)

REFERENCES (TM)
TM 9-2320-260-20
TM 9-2320-260-34P-1

Installation

1. Remove pipe plug (11) from front gear cover (8).
2. Using engine barring tool, rotate crankshaft (9) until timing marks (12) on camshaft gear and accessory drive gear are alined with hole (10) in front gear cover (8).
3. Wrap threads of pipe plug (11) with anti seize tape and install pipe plug(11) in front gear cover (8). Tighten pipe plug (11) 35-45 lb-ft (47-61 N•m).
4. Install oil slinger (2) and pulley sleeve (3) on accessory driveshaft (7).
5. Install new pin (1) on accessory driveshaft (7).
6. Install accessory drive pulley (4), washer (6), and nut (5) on accessory driveshaft (7). Using engine barring tool to prevent crankshaft from turning, tighten nut (5) 90-110 lb-ft (122-149 N•m).

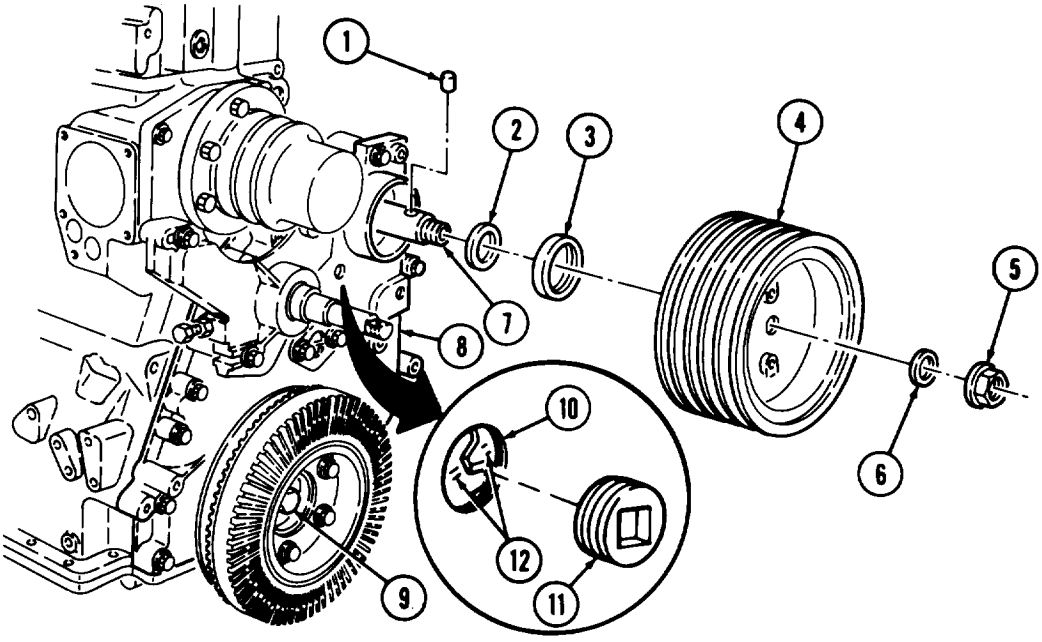

FOLLOW-ON TASKS:
- Install fan blade (TM 9-2320-260-20).
- Install water pump drivebelt (TM 9-2320-260-20).
- Remove engine from repair stand (para. 3-75).

3-71. FRONT GEAR COVER INSTALLATION

THIS TASK COVERS:

Installation

INITIAL SETUP

APPLICABLE MODELS

All

TOOLS

General mechanic's tool kit (Appendix B, Item 1)
Outside micrometer (Appendix B, Item 8)
Feeler gage (Appendix B, Item 58)

MATERIALS/PARTS

Two lockwashers (Appendix D, Item 215)
Four lockwashers (Appendix D, Item 217)
Shims (Appendix D, Item 500)
Gasket (Appendix D, Item 58)

REFERENCES (TM)

TM 9-2320-260-20
TM 9-2320-260-34P-1

CAUTION

Screws securing front gear case cover are different lengths. Ensure screws are installed in their proper places. Failure to do so may result in damage to equipment.

Installation

1. Install new gasket (1) and front gear cover **(6)** on cylinder block (2) with fifteen screws (7), two washers (10), new lockwashers (9), screws (8), four washers (3), new lockwashers (4), and screws (5).
2. Remove two screws (15), camshaft cover (14), spacer (11), and shim(s) (12) from front gear cover (6).
3. Place camshaft cover (14) against camshaft (13) and measure clearance between cover (14) and front gear cover (6) with feeler gage.
4. Measure shim(s) (12) as a pack with micrometer. Add or subtract shim(s) (12) from pack to provide a clearance of 0.001-0.005 in. (0.0254-0.127 mm) for engines with camshaft thrust plate or 0.008-0.013 in. (0.2032-0.3302 mm) for engines with camshaft outboard bearing support.
5. Install camshaft cover (14), spacer (11), and shim(s) (12) on front gear cover (6) with two screws (15).
6. Remove dowel pins (refer to para, 3-33) from cylinder block (2).

3-71. FRONT GEAR COVER INSTALLATION (Contd)

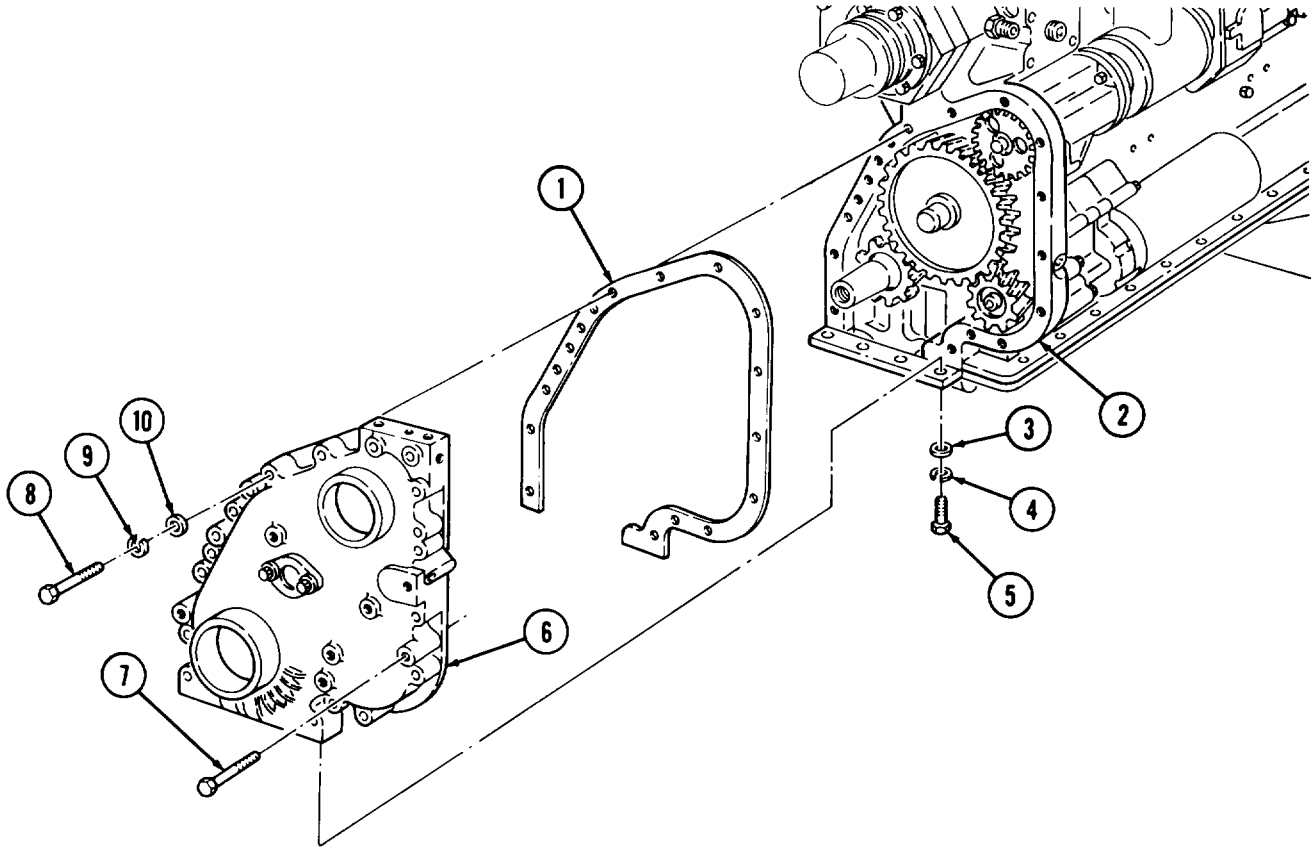

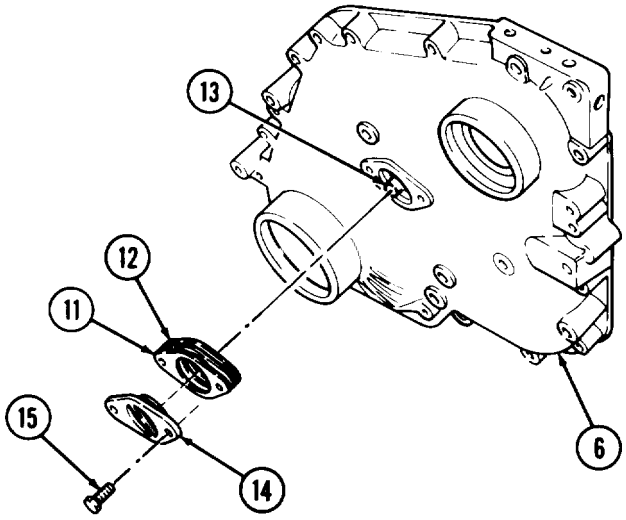

FOLLOW-ON TASKS:
- Install crankshaft flange (para. 3-73).
- Install fan bracket and hub (TM 9-2320-260-20).
- Install accessory drive (para. 3-69).
- Install vibration damper (para. 3-74).

3-72. OIL PAN INSTALLATION

THIS TASK COVERS:

Installation

INITIAL SETUP

APPLICABLE MODELS
All

TOOLS
General mechanic's tool kit (Appendix B, Item 1)
Torque wrench, 3/8-in. dr. (Appendix B, Item 4)

MATERIALS/PARTS
Gasket (Appendix D, Item 111)
Twenty-eight screw-assembled lockwashers (Appendix D, Item 395)
Eight lockwashers (Appendix D, Item 217)
Sealing compound (Appendix C, Item 43)

REFERENCES (TM)
TM 9-2320-260-20
TM 9-2320-260-34P-1

Installation

1. Apply sealing compound to oil pan (17) and install new gasket (10) on oil pan (17).
2. Install oil pan (17) and two clamps (19) on cylinder block (15) with twenty-eight new screw-assembled lockwashers (18). Finger tighten screw-assembled lockwashers (18).
3. Install four washers (3), new lockwashers (2), and screws (1) on rear of oil pan (17). Finger tighten screws (l).
4. Install four washers (8), new lockwashers (7), and screws (6) on cylinder block (15). Finger tighten screws (6).
5. Install four screws (4) on oil pan (17) and flywheel housing (16).

CAUTION

Tighten oil pan screws evenly, starting from middle of each side of pan. Failure to do so may result in warpage of oil pan flange.

6. Alternately tighten screw-assembled lockwashers (18) 35-40 lb-ft (47-54 N•m).
7. Alternately tighten screws (1) and (6) 15-40 lb-ft (20-54 N•m).
8. Install front sump tube (11) on scavenger adapter (9).
9. Install oil pickup hose (13) on suction flange (5).
10. Install oil return hose (14) on aerator (12).

3-72. OIL PAN INSTALLATION (Contd)

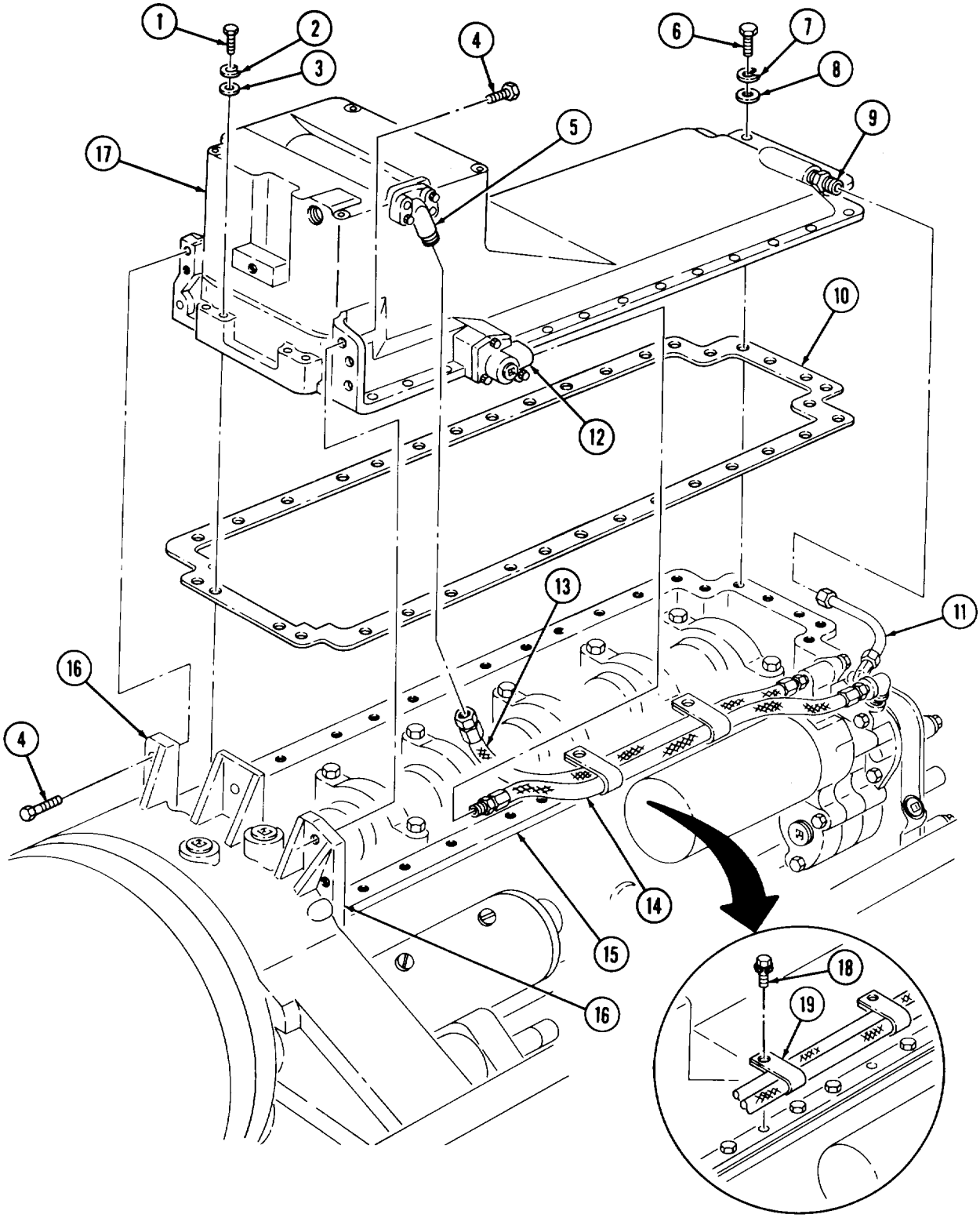

FOLLOW-ON TASKS: • Install dipstick tube (TM 9-2320-260-20).
• Remove engine from repair stand (para. 3-75).

3-73. CRANKSHAFT FLANGE INSTALLATION

THIS TASK COVERS:

Installation

INITIAL SETUP

APPLICABLE MODELS

All

TOOLS

General mechanic's tool kit (Appendix B, Item 1)
Torque wrench, 314-in. dr. (Appendix B, Item 2)

TOOLS (Contd)

1-1/8-in. socket, 3/4-in. dr. (Appendix B, Item 37)
Engine barring tool (Appendix B, Item 66)

REFERENCES (TM)

TM 9-2320-260-34 P-1

Installation

1. Install crankshaft flange (1), washer (2), and screw (3) on crankshaft (4).
2. While holding crankshaft (4) with engine barring tool, tighten screw (3) 180-200 lb-ft (244-271 N•m).

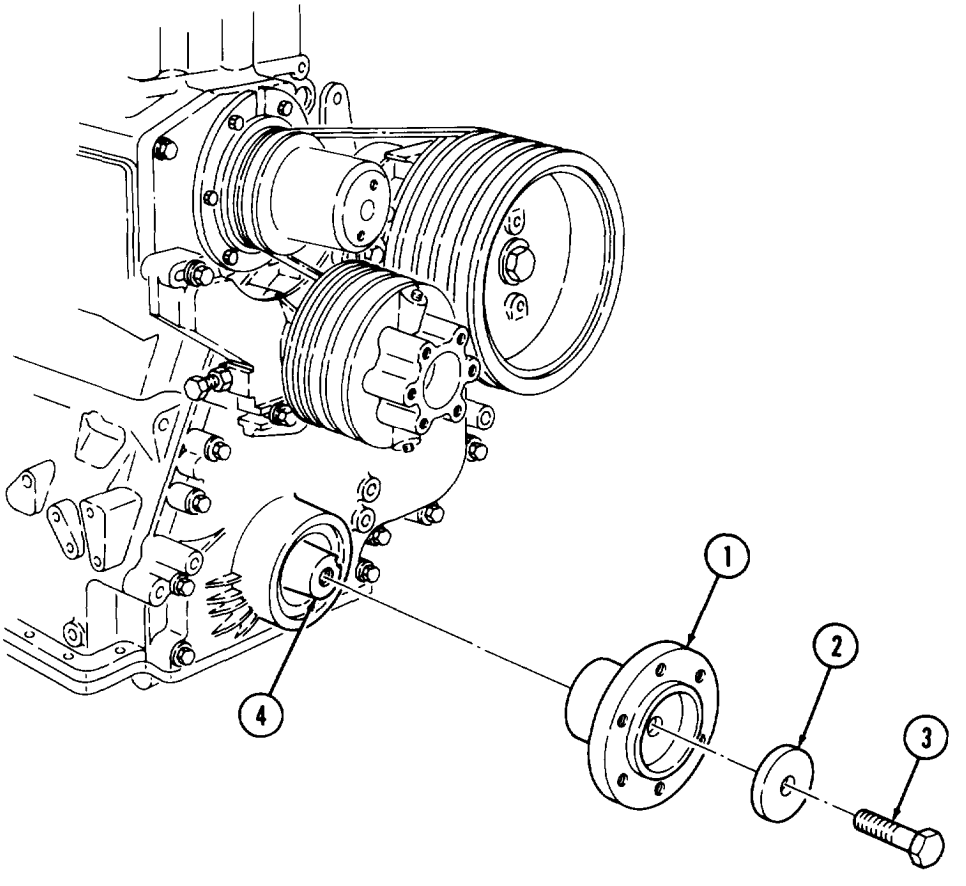

FOLLOW-ON TASK: Install vibration damper (para. 3-74).

3-74. VIBRATION DAMPER INSTALLATION

THIS TASK COVERS:

Installation

INITIAL SETUP

APPLICABLE MODELS
All

TOOLS
General mechanic's tool kit (Appendix B, Item 1)
Torque wrench, 3/8-in. dr. (Appendix B, Item 4)

MATERIALS/PARTS
Six lockwashers (Appendix D, Item 223)

REFERENCES (TM)
TM 9-2320-260-34P-1

Installation

1. Install vibration damper (1) on crankshaft flange (4) with six new lockwashers (2) and screws (3)
2. Tighten screws (3) alternately 60 lb-ft (81 N•m).

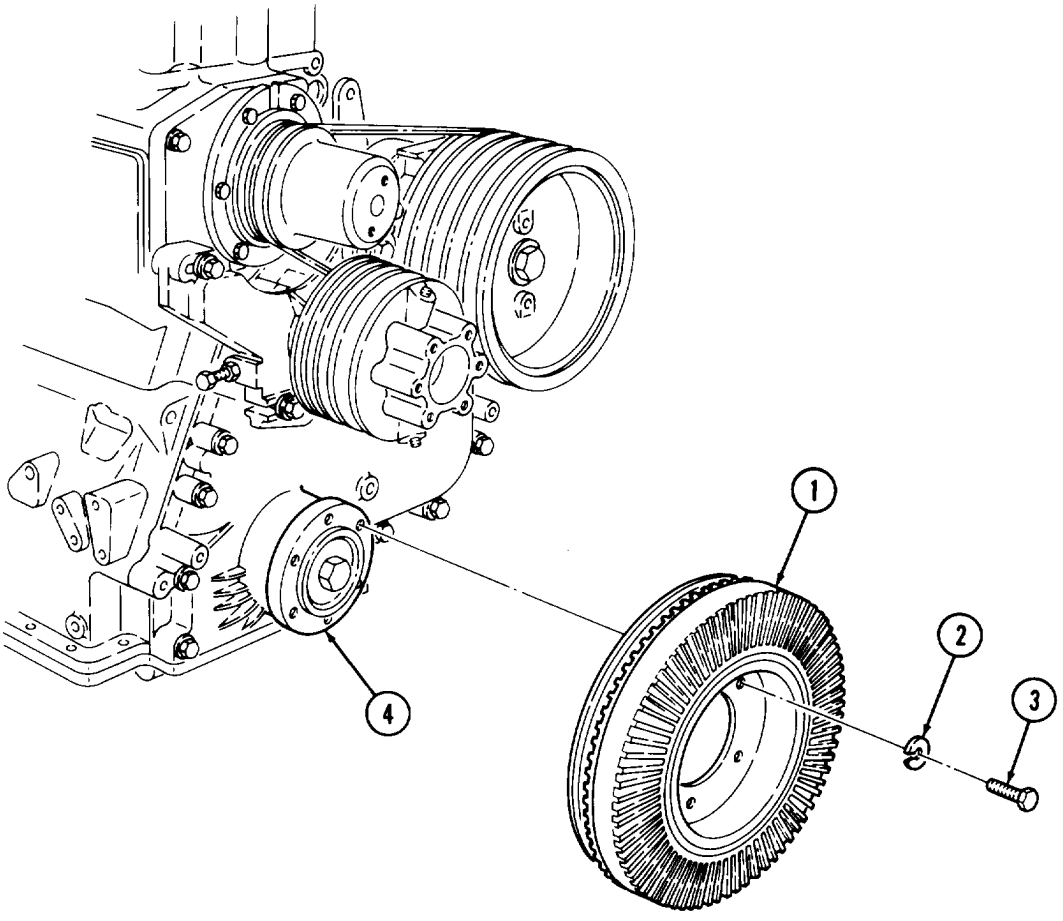

FOLLOW-ON TASK: Remove engine from repair stand (para. 3-75).

3-75. ENGINE REMOVAL FROM REPAIR STAND

THIS TASK COVERS:

Removal

INITIAL SETUP

APPLICABLE MODELS
All

TOOLS
General mechanic's tool kit (Appendix B, Item 1)
Torque wrench, 3/8-in. dr. (Appendix B, Item 4)
Chain
Lifting device

MATERIALS/PARTS
Twelve lockwashers (Appendix D, Item 225)
Two gaskets (Appendix D, Item 115)

REFERENCES (TM)
TM 9-2320-260-20
TM 9-2320-260-34P-1

GENERAL SAFETY INSTRUCTIONS
All personnel must stand clear during lifting operations.

Removal

1. Attach chain to two engine lifting brackets (1).
2. Attach lifting device to chain. Raise lifting device to remove slack from chain.

WARNING

All personnel must stand clear during lifting operations. A swinging or shifting load may cause injury to personnel.

NOTE

Assistant will help with steps 3 and 4.

3. Remove eight screws (6) and washers (5) from mounting plate.
4. Remove engine (9) from engine repair stand.
5. Remove two screws (4), washers (3), and front engine mount adapter from front water header (2).
6. Remove five screws (7), washers (8), and rear engine mount adapter from rear water header (10).

3-75. ENGINE REMOVAL FROM REPAIR STAND (Contd)

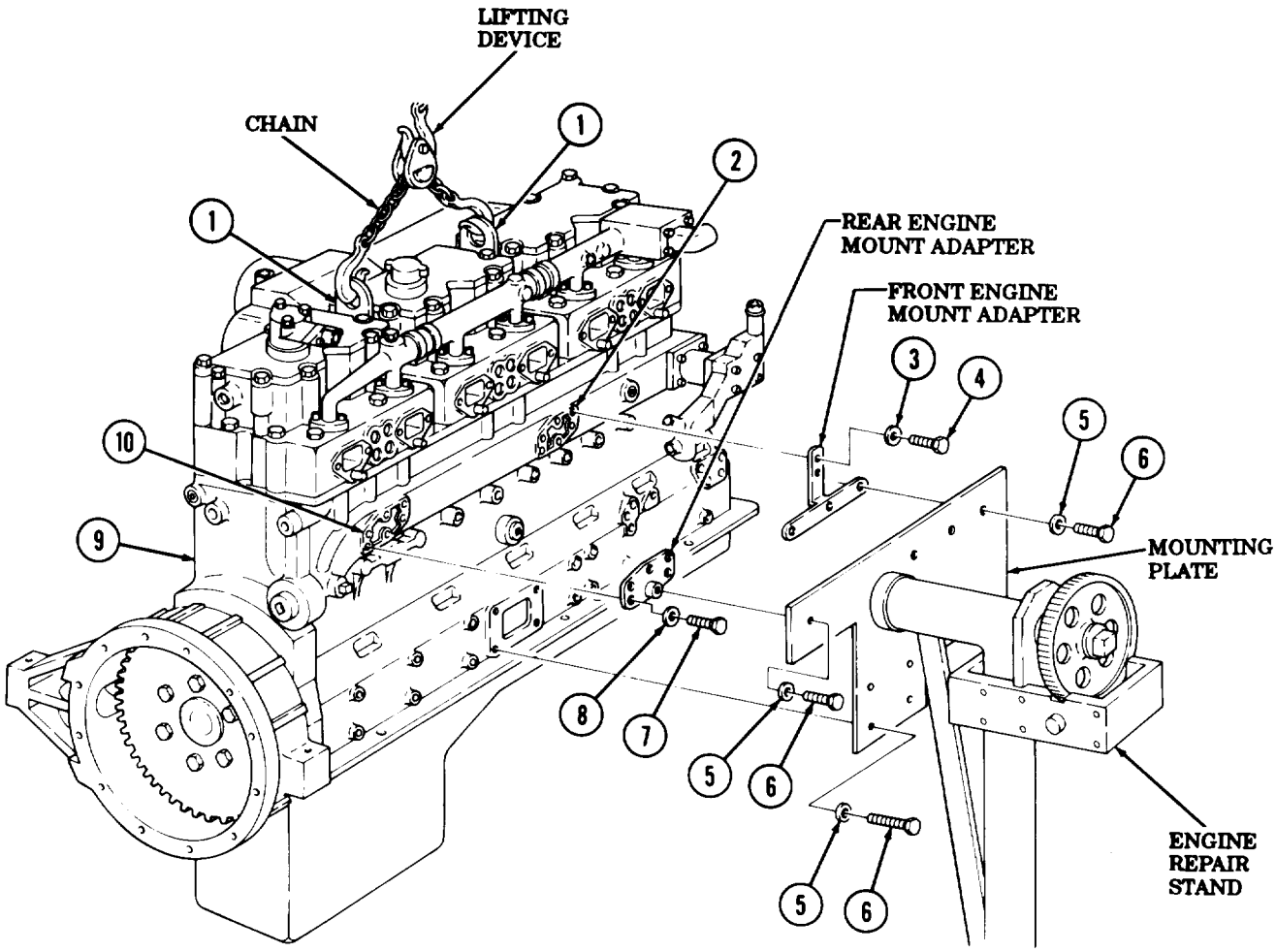

FOLLOW-ON TASKS:
- Install water header plates (para. 3-4).
- Install engine oil cooler (para. 3-12).
- Install crankcase breather (TM 9-2320-260-20).
- Install exhaust manifold (para. 3-11).
- Install alternator and mounting bracket (TM 9-2320-260-20).
- Install power steering pump (TM 9-2320-260-20).
- Install transmission (para, 8-5),
- Install radiator (TM 9-2320-260-20).
- Install engine and transmission (para. 3-24).

Section VII. ENGINE VALVE AND INJECTOR MAINTENANCE

3-76. ENGINE VALVE AND INJECTOR MAINTENANCE INDEX

PARA. NO.	TITLE	PAGE NO.
3-77.	Intake and Exhaust Valves Refacing	3-217
3-78.	Valve Seat Inserts Maintenance	3-219
3-79.	Injector Sleeve Maintenance	3-222
3-80.	Valve Seat Grinding	3-228
3-81.	Engine Injector Timing Instructions	3-233
3-82.	Injector and Valve Adjustment (Dial Indicator Method)	3-237
3-83.	Injector and Valve Adjustment (Torque Method)	3-244
3-84.	Top Stop Plunger Travel Adjustment	3-250

3-77. INTAKE AND EXHAUST VALVES REFACING

THIS TASK, COVERS:

a. Valve Specifications
b. Grinding or Refacing Valves
c. Cleaning After Refacing

INITIAL SETUP

APPLICABLE MODELS
All

TOOLS
General mechanic's tool kit (Appendix B, Item 1)
Valve refacer (Appendix B, Item 41)
Outside micrometer (Appendix B, Item 8)

REFERENCES (TM)
TM 9-2320-260-34 P-1
TM 9-4910-484-10

EQUIPMENT CONDITION
Intake and/or exhaust valve(s) removed (para. 3-51).

a. Valve Specifications

Inspect intake and exhaust valves (1). Refer to table 3-4, Valve Specifications, for limits. If rim thickness is 0.0591 in. (1.501 mm) or greater, intake and/or exhaust valve(s) can be resurfaced.

Table 3-4. Valve Specifications.

POINT OF MEASUREMENT	WEAR LIMITS/TOLERANCES	
	ENGLISH	METRIC
Stem	0.449-0.4510 in.	11.40-11.46 mm
Seat angle		
Intake	30°	
Exhaust	45°	
Refacing depth	0.0591 in.	1.501 mm
Valve head thickness	0.105 in.	2.67 mm

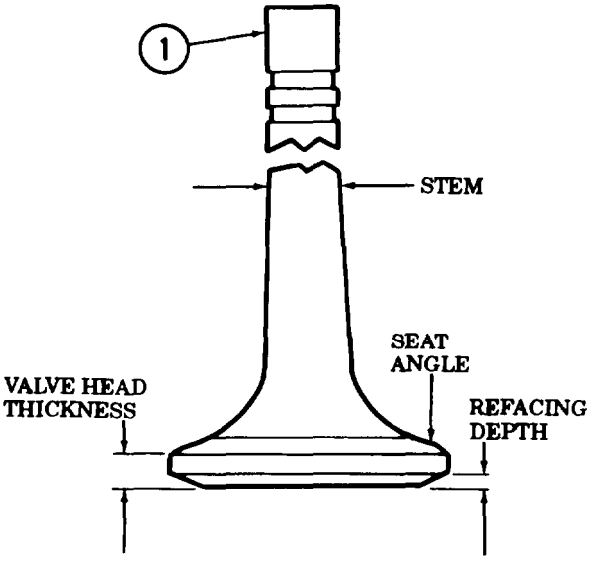

3-77. INTAKE AND EXHAUST VALVES REFACING (Contd)

b. Grinding or Refacing Valves

NOTE

For valve refacer operating instructions, refer to TM 9-4910-484-10.

1. Install valve (1) stem in chuck.

NOTE

An out-of-round condition on valve will be marked by a small bright spot on valve seating surface of valve head.

2. Move switch on valve refacer to “ON” position, turn wheel handle, and lightly touch valve (1) face with grind wheel. Move grind wheel away from valve (1) and move switch on valve refacer to “OFF" position.
3. Inspect valve (1) for bright spot. Mark position of bright spot. Rechuck valve (1) 180° from first position. Mark position of second bright spot.
4. Note location of bright spots.
   a. If bright spots are in the same position after chucking, the valve (1) is warped. Replace valve (1).
   b. If bright spots occur in different positions, the chuck is out of alinement and the valve (1) is being incorrectly chucked. Runout should not exceed 0.001 in. (0.0254 mm).
5. Wet grind intake or exhaust valve (1) to specified angle. Refer to table 3-4, Valve Specifications, for measurement.
6. Recheck valve (1) head thickness. If valve (1) head thickness is less than specified, replace valve (1).

c. Cleaning After Refacing

NOTE

Do not use cloth to wipe valves.

For general cleaning instructions, refer to para. 2-8.

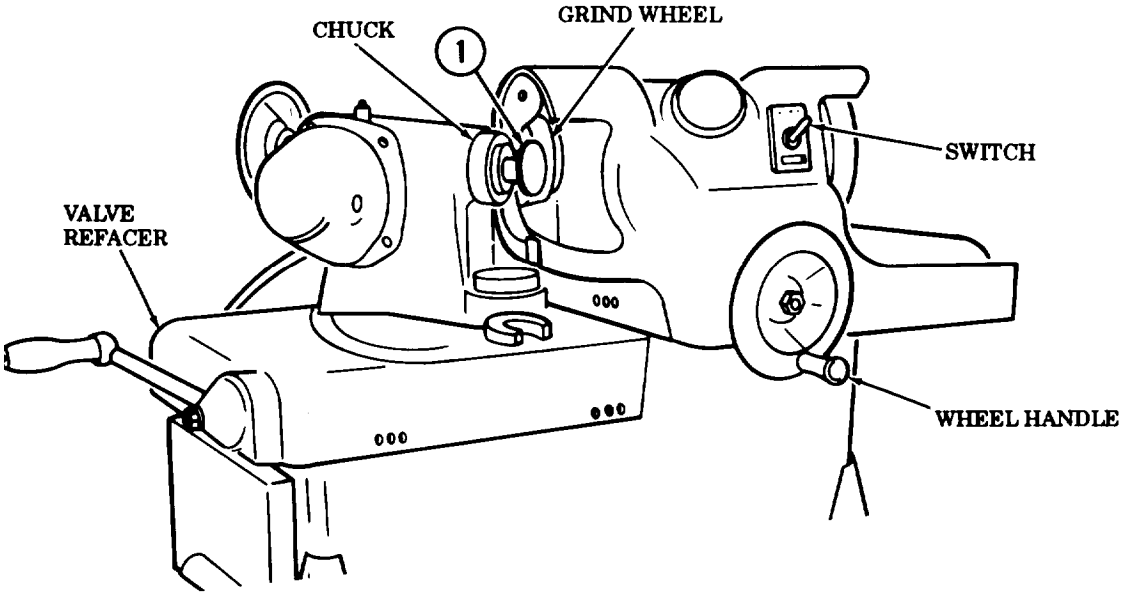

FOLLOW-ON TASK: Install intake and or exhaust valve(s) (para. 3-51).

3-78. VALVE SEAT INSERTS MAINTENANCE

THIS TASK COVERS:

a. **Removal**
b. Gaging and Counterboring
c. Cleaning
d. Installation

INITIAL SETUP

APPLICABLE MODELS
All

TOOLS
General mechanic's tool kit (Appendix B, Item 1)
Valve seat insert tool (Appendix (B, Item 42)
Valve guide arbor (mandrel set) (Appendix B, Item 44)
Valve seat insert staking tool (Appendix B, Item 45)
Valve seat insert extractor (Appendix B, Item 46)
Outside micrometer (Appendix B, Item 8)
Inside micrometer (Appendix B, Item 9)
Depth micrometer (Appendix B, Item 16)
Counterbore cutter (Appendix B, Item 43)
Tool driver (Appendix B, Item 61)
Wire brush (Appendix B, Item 71)

MATERIALS/PARTS
Valve seat insert(s) (4 per cylinder head) (Appendix D, Item 525)
Drycleaning solvent (Appendix C, Item 48)

REFERENCES (TM)
TM 9-2320-260-34 P-1

EQUIPMENT CONDITION
Disassemble cylinder head (para. 3-51).

GENERAL SAFETY INSTRUCTIONS
- Keep fire extinguisher nearby when using drycleaning solvent,
- Compressed air source will not exceed 30 psi (207 kPa).
- Eyeshields must be worn when cleaning with compressed air.

a. Removal

Using valve seat insert extractor, remove four valve seat inserts (2) from cylinder head (1). Discard valve seat inserts (2).

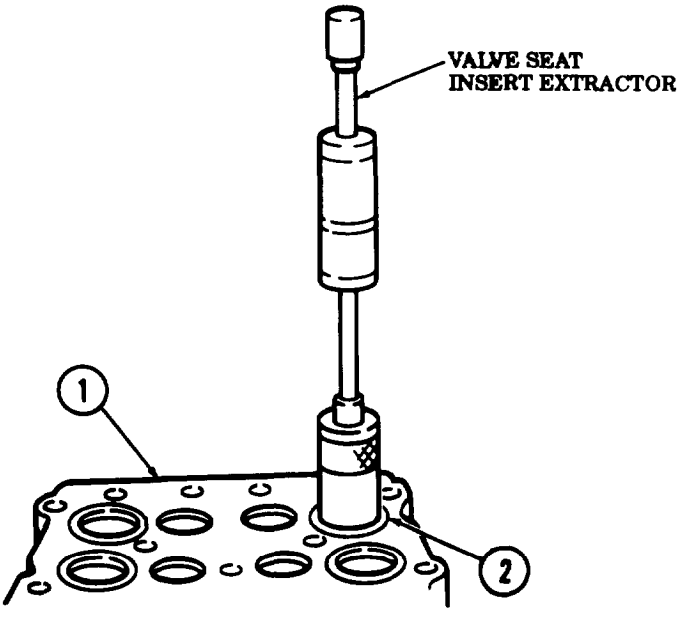

3-78. VALVE SEAT INSERTS MAINTENANCE (Contd)

b. Gaging and Counterboring

CAUTION

Before counterboring, each replacement valve seat insert outside diameter and thickness must be measured and compared to relating valve seat insert counterbore in the cylinder head. These measurements will prevent overboring and damage to the cylinder head.

1. Measure valve seat insert (1) outside diameter and thickness. Refer to table 3-5, Valve Seat Insert Specifications, for measurements. Replace valve seat insert (1) if valve seat insert (1) does not meet specifications.
2. Measure insert counterbore (2) depth and inside diameter. Refer to table 3-5, Valve Seat Insert Specifications, for measurements. Perform counterboring procedures if insert counterbore (2) does not meet specifications.

Table 3-5. Valve Seat Insert Specifkations.

VALVE SEAT INSERT THICKNESS	VALVE SEAT INSERT OUTSIDE DIAMETER	INSERT COUNTERBORE DEPTH	INSERT COUNTERBORE INSIDE DIAMETER
0.278-0.282 in. (7.0612-7.1628 mm)	**2.0025-2.0035** in. **(50.864-50.889** mm)	Standard	1.9995-2.0005 in. (50.787-50.813 mm)

NOTE

- When using counterbore cutter, center the cutter in the insert counterbore and valve guide arbor.
- Allow counterbore cutter to turn several revolutions at exact moment the proper depth in cylinder head is reached to ensure a perfectly flat bottom of bore for valve seats to seat.

3. Using counterbore cutter and valve guide arbor, cut insert counterbore (2) 0.006-0.010 in. (0.152-0.254 mm) deeper than valve seat insert (1) thickness. This will allow staking of cylinder head (3) to secure valve seat insert (1).

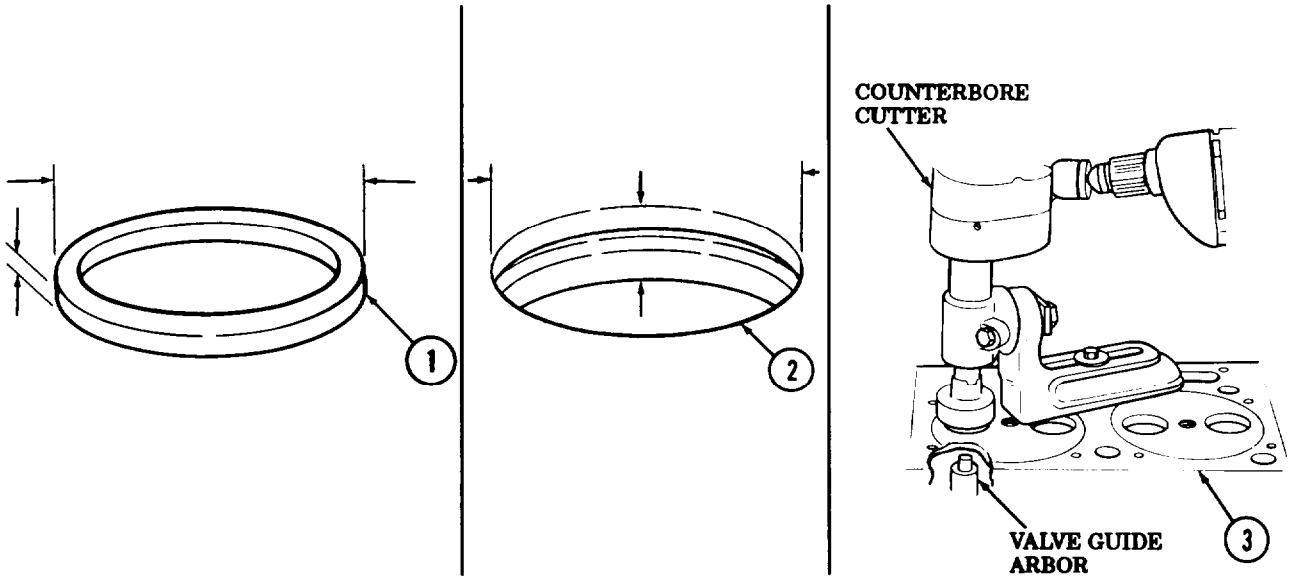

3-78. VALVE SEAT INSERTS MAINTENANCE (Contd)

c. Cleaning

WARNING

Compressed air source will not exceed 30 psi (207 kPa). When cleaning with compressed air, eyeshields must be worn. Failure to wear eyeshields may result in injury to personnel.

1. Clean cylinder head (3) with compressed air.

WARNING

Drycleaning solvent is flammable and will not be used near open flame. Use only in well-ventilated places. Failure to do so may result in injury to personnel.

2. Clean cylinder head (3) openings and ports with brush and drycleaning solvent. Dry with compressed air.

d. Installation

CAUTION

Valve seat inserts may be installed one time only. If valve seat insert is not properly installed the first time, a new valve seat insert must be installed. Reinstalling valve seat inserts will result in damage to equipment.

NOTE

Keep valve seat inserts in cold storage until ready to install in cylinder head. Install valve seat insert very quickly so room temperature does not expand valve seat insert making it difficult to install.

1. Using valve seat insert tool, drive valve seat insert (1) into valve seat insert bore (4) of cylinder head (3).
2. Using valve seat insert tool and valve seat insert staking tool, stake valve seat insert (1) into cylinder head (3).

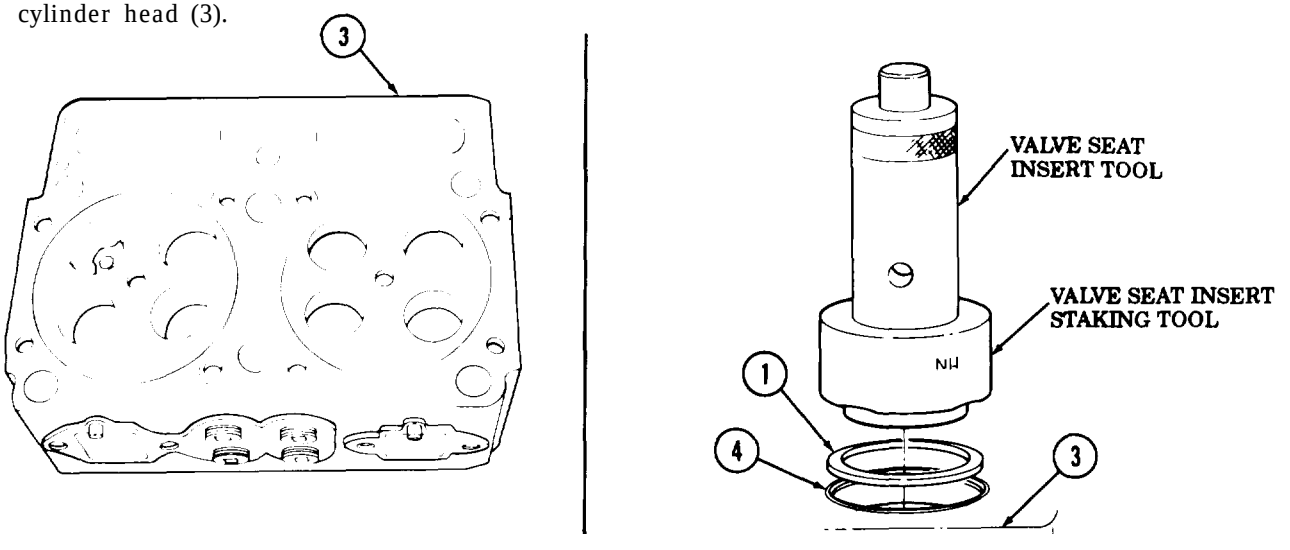

FOLLOW-ON TASK: Assemble cylinder head (para. 3-51).

3-79. INJECTOR SLEEVE MAINTENANCE

THIS TASK COVERS:

a. Removal
b. Bead Cutting
c. Installation
d. Fitting and Forming
e. Check and Test

INITIAL SETUP

APPLICABLE MODELS
All

MANUFACTURED TOOLS
Injector sleeve seat cutter (Appendix E, Figure E-7)

TOOLS
General mechanic's tool kit (Appendix B, Item 1)
Bead cutting tool (Appendix B, Item 55)
Soft-head hammer (Appendix B, Item 47)
Torque wrench, 3/8-in. dr. (Appendix B, Item 4)
Torque wrench, 1/2-in. dr. (Appendix B, Item 3)
Gage block (Appendix B, Item 78)
Injector sleeve extractor (Appendix B, Item 49)

TOOLS (Contd)
Injector sleeve mandrel (Appendix B, Item 50)
Injector sleeve expander tool (Appendix B, Item 51)
Drill press (Appendix B, Item 53)
Injector sleeve holding tool (Appendix B, Item 54)

MATERIALS/PARTS
Injector sleeve (Appendix D, Item 160)
O-ring (Appendix D, Item 300)
Prussian blue (Appendix C, Item 26)
Cutting fluid (Appendix C, Item 11)
Lubricating oil (Appendix C, Item 21)

REFERENCES (TM)
TM 9-2320-260-34P-1

EQUIPMENT CONDITION
Cylinder head removed (para. 3-18 or 3-40).

a. Removal

1. Place cylinder head (1) on workbench, exhaust manifold side down.

NOTE

When using injector sleeve extractor, ensure extractor tip is firmly seated against bottom of injector sleeve.

2. Using injector sleeve extractor, remove injector sleeve (2) from injector sleeve bore (3). Discard injector sleeve (2).
3. Remove O-ring (4) from injector sleeve bore (3). Discard O-ring (4).
4. Remove injector sleeve extractor from cylinder head (1).

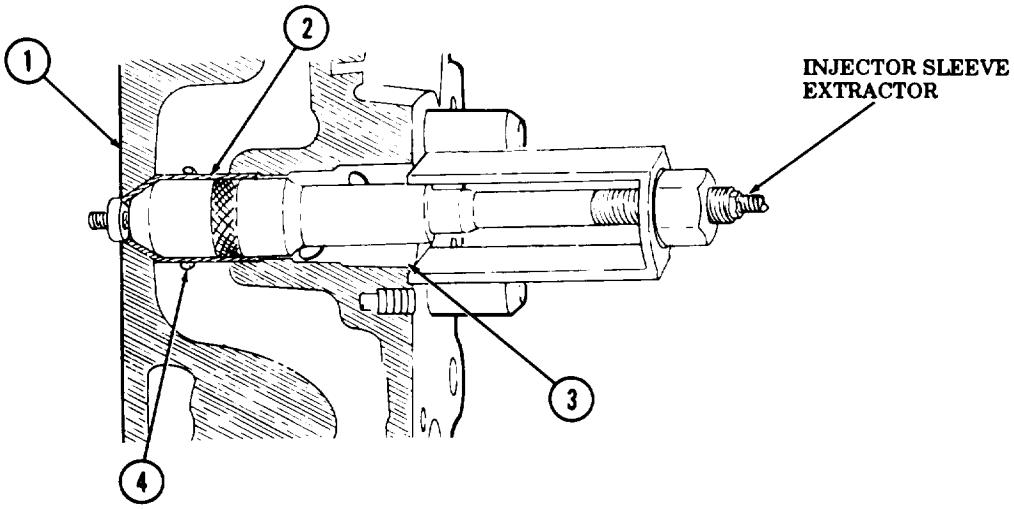

3-79. INJECTOR SLEEVE MAINTENANCE (Contd)

b. Bead Cutting

CAUTION

- Do not allow drill speed to exceed 75 rpm. If drill speed exceeds 75 rpm, tool chatter may occur and cylinder head maybe damaged.
- Do not cut more than 0.010 in. (0.254 mm) into cylinder head.
- Ensure cutter is sharp. A dull cutter may cause damage to injector sleeve bore and bead.

NOTE

- Lubricate cutter with cutting oil.
- Drill may be turned by hand for light cuts or to prevent accidental removal of too much material.

1. Using bead cutting tool and drill, cut injector sleeve bore (3). When proper depth has been reached, allow cutter to remain in position for ten seconds to ensure a good seat.
2. Remove bead cutting tool from injector sleeve bore (3).
3. Coat new injector sleeve (2) with prussian blue.
4. Using injector sleeve mandrel, insert new injector sleeve (2) in injector sleeve bore (3) until fully seated.

NOTE

For injector sleeve to be properly seated, there must be a 360° blue band around the injector sleeve and injector sleeve bore.

5. Using injector sleeve extractor, remove injector sleeve (2) from injector sleeve bore (3), and examine contact pattern. If prussian blue does not form a 360° band around injector sleeve (2) and injector sleeve bore (3), recut injector sleeve bore (3) (step 1).

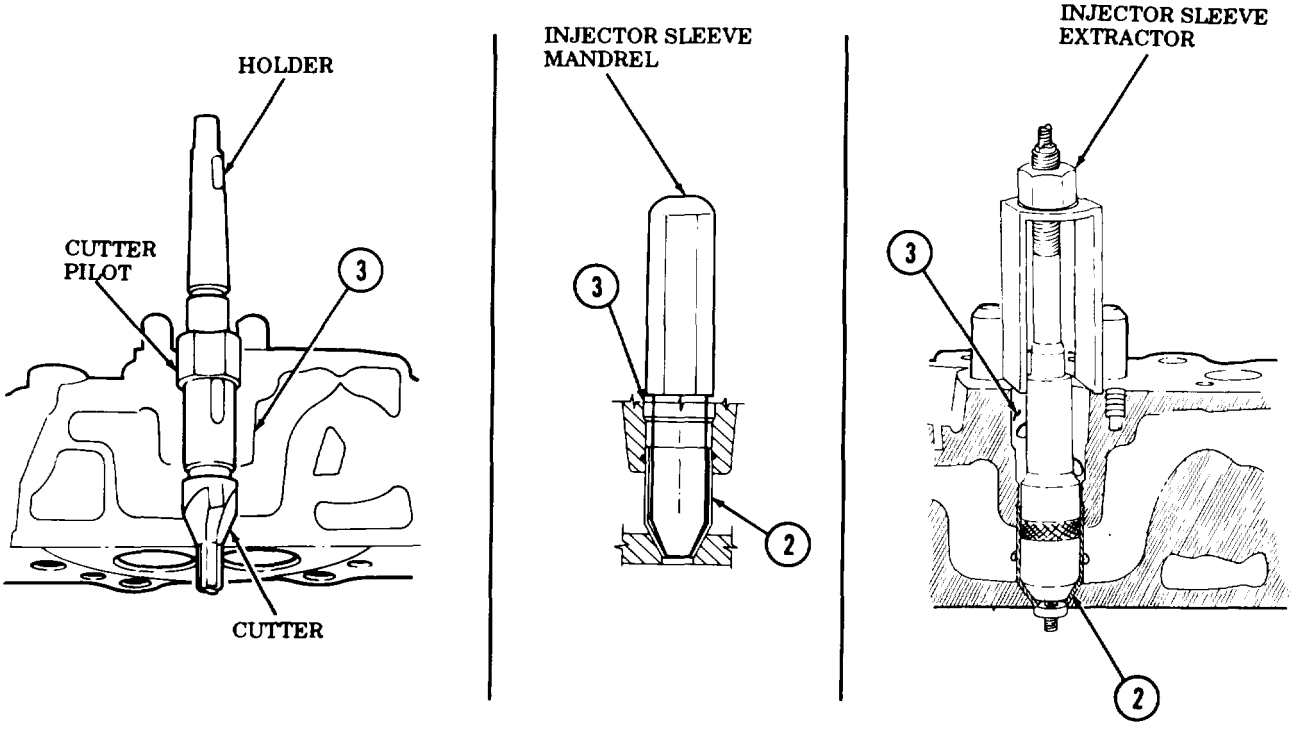

3-79. INJECTOR SLEEVE MAINTENANCE (Contd)

c. Installation

NOTE

Ensure injector sleeve seat and injector sleeve bore are free of oil, carbon, and other foreign material.

1. Apply lubricating oil to new O-ring (2) and install new O-ring (2) on groove of injector sleeve bore (1).
2. Using injector sleeve mandrel, install new injector sleeve (4) into injector sleeve bore (1).
3. Insert injector sleeve holding tool in cylinder head (3). Tighten nut 35-40 lb-ft (47-54 N•m).
4. Using injector sleeve mandrel and soft-head hammer, drive injector sleeve (4) until it bottoms. Retighten nut 35-40 lb-ft (47-54 N•m).

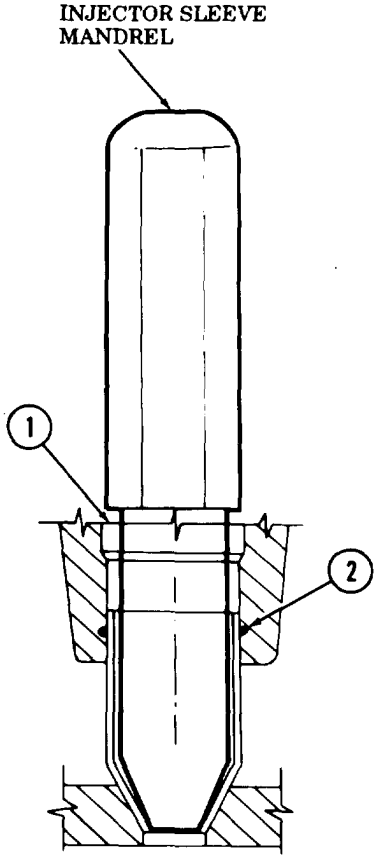

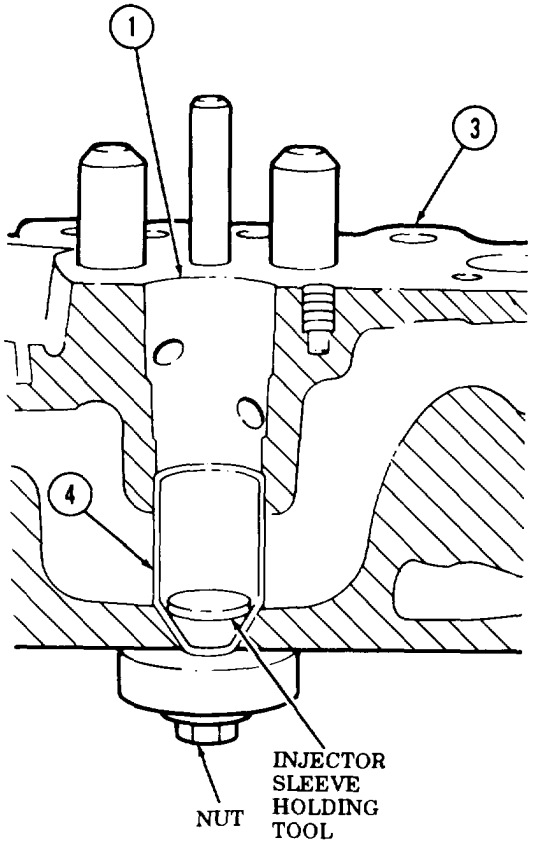

3-79. INJECTOR SLEEVE MAINTENANCE (Contd)

d. Fitting and Forming

CAUTION

Do not roll lower area of injector sleeve. Overrolling of injector sleeve will cause deformation of injector sleeve into O-ring groove.

NOTE

Use an allen wrench to lock thrust nut in place.

1. Position injector sleeve expander tool in injector sleeve (4) and adjust injector sleeve expander tool by turning thrust nut so that roller extends 0.5 in. (12.7 mm) into injector sleeve (4).
2. Push down, turn, and adjust injector sleeve expander tool until 75 lb-in. (8.5 N•m) maximum is reached. Remove injector sleeve expander tool and injector sleeve holding tool from injector sleeve (2).
3. Using injector sleeve seat cutter, drill and cut injector sleeve (4) to allow injector tip (5) to protrude 0.060-0.070 in. (1.52-1.78 mm) from cylinder head (3).

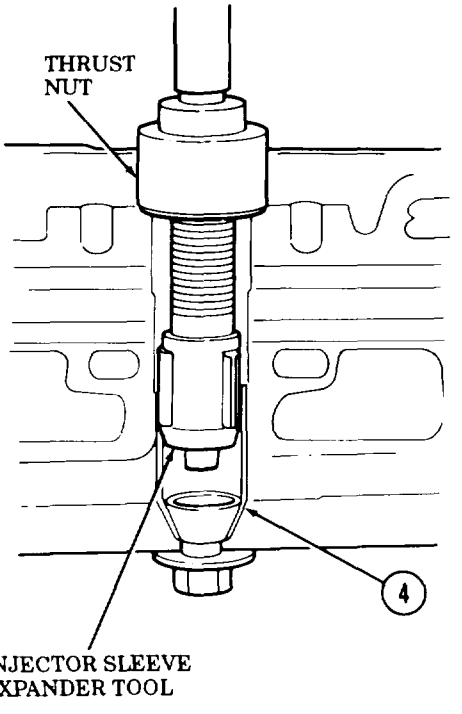

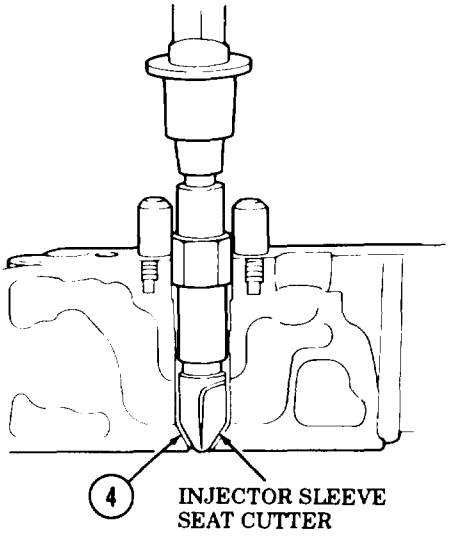

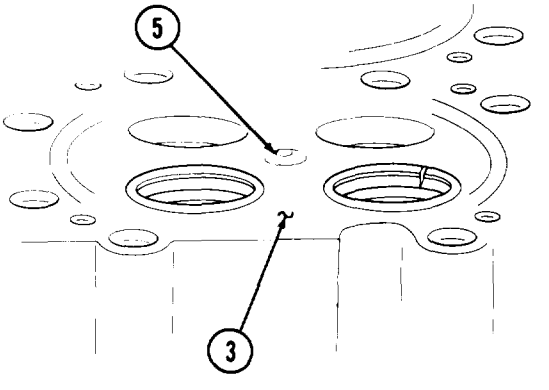

3-79. INJECTOR SLEEVE MAINTENANCE (Contd)

e. Check and Test

1. Coat injector cup (8) with prussian blue.

NOTE

Top stop injectors do not have washer between injector and retaining clamp.

2. Install injector (5) in injector bore (4) of cylinder head (3) with washer (6), retaining clamp (1), and two screws (2). Alternately tighten two screws (2) 11-12 lb-ft (15-16 N•m) in 4 lb-ft (5 N•m) steps.
3. Remove two screws (2), retaining clamp (1), washer (6), and injector (5) from cylinder head (3).

NOTE

Blue band on injector sleeve must be minimum of 0.060 in. (1.52 mm) wide and located approximately 0.469 in. (11.91 mm) from bottom of cylinder head surface.

4. Inspect location and width of blue band on injector sleeve (7) in injector bore (4). If blue band does not meet specifications, regrind injector sleeve (7) seating area (subtask d).
5. Install injector (5) in injector bore (4) of cylinder head (3) with washer (6), retaining clamp (1), and two screws (2). Alternately tighten two screws (2) 11-12 lb-ft (15-16 N•m) in 4 lb-ft. (5 N•m) steps.

NOTE

Proper injector tip protrusion is 0.060 -0.070 in, (1.52-1.78 mm).

6. Check injector tip (9) protrusion.
   a. Install gage block on cylinder head (3).
   b. If injector tip (9) protrusion exceeds 0.070 in. (1.78 mm), install new injector sleeve (7).
   c. If injector tip (9) protrusion is less than 0.060 in. (1.52 mm), regrind injector sleeve (7) (subtask d.).
7. Remove two screws (2), retaining clamp (1), washer (6), and injector (5) from injector bore (4).

3-79. INJECTOR SLEEVE MAINTENANCE (Contd)

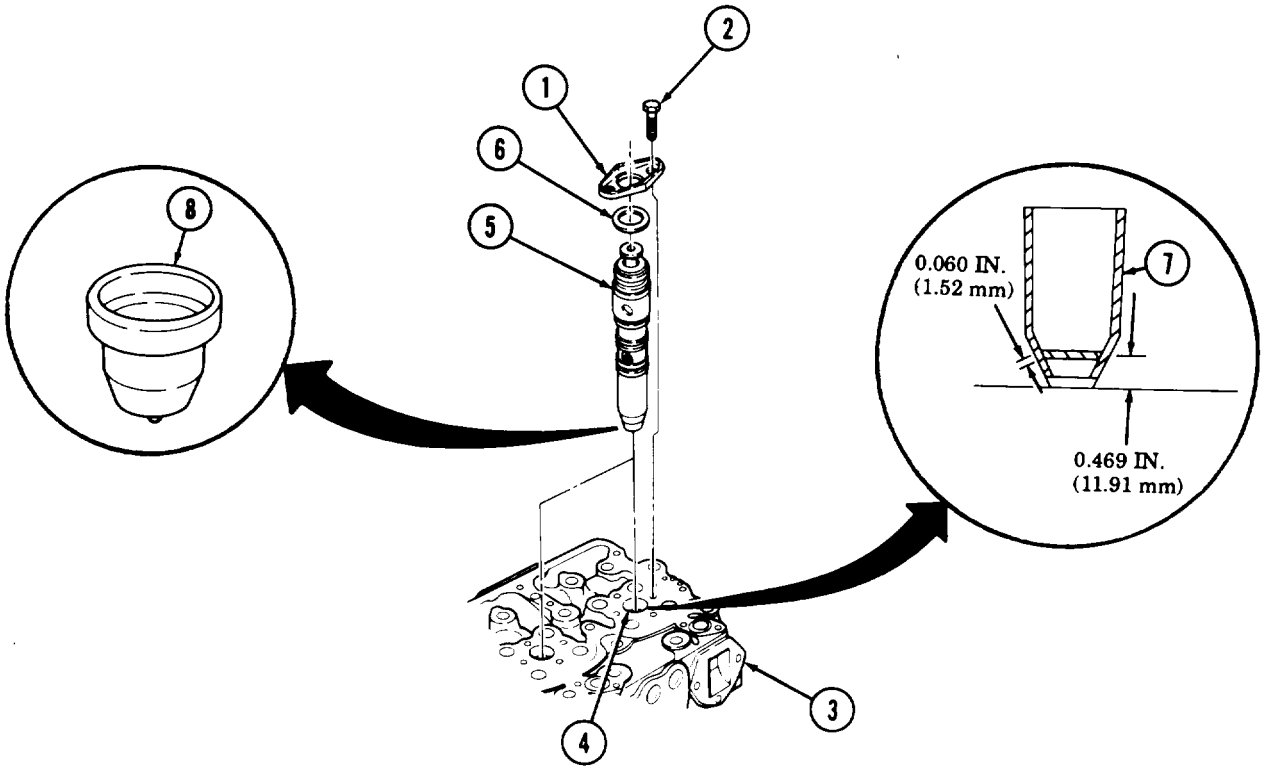

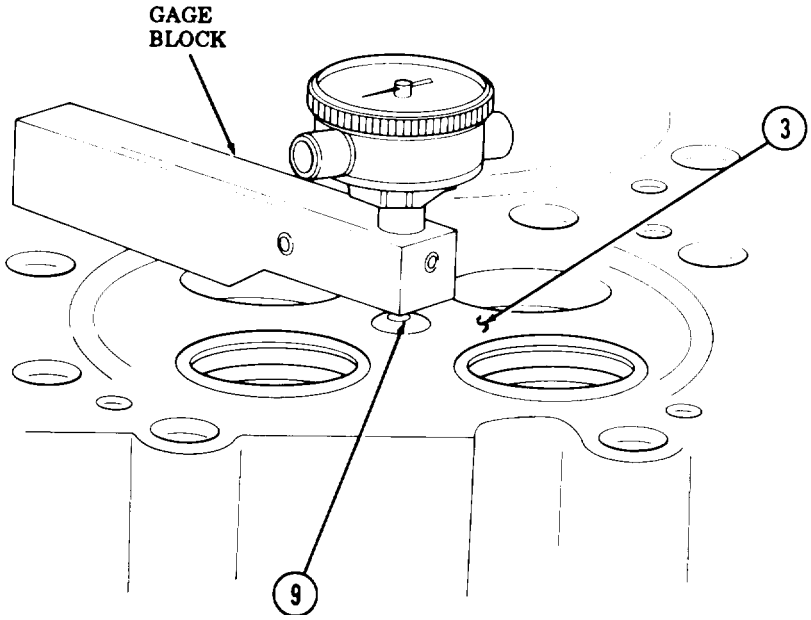

FOLLOW-ON TASK: Install cylinder head (para. 3-18 or 3-62).

3-80. VALVE SEAT GRINDING

THIS TASK COVERS:

a. Dressing Grinding Wheel
b. Pre-Grinding Operation
c. Valve Seat Grinding
d. Cleaning
e. Gaging Valve Seats
f. Lapping Valve Seats

INITIAL SETUP

APPLICABLE MODELS
All

TOOLS
General mechanic's tool kit (Appendix B, Item 1)
Dial indicator (Appendix B, Item 11)
Valve guide arbor (Appendix B, Item 44)
Valve grinder (Appendix B, Item 62)
Wire brush (Appendix B, Item 71)

MATERIALS/PARTS
Lubricating oil (Appendix C, Item 20)
Drycleaning solvent (Appendix C, Item 48)
Lint-free cloth (Appendix C, Item 9)
Prussian blue (Appendix C, Item 26)
Coarse lapping and grinding compound (Appendix C, Item 18)
Medium lapping and grinding compound (Appendix C, Item 19)

REFERENCES (TM)
TM 9-2320 -260-34P-1

EQUIPMENT CONDITION
New valve seat insert(s) installed (para. 3-78).

GENERAL SAFETY INSTRUCTIONS
- Keep fire extinguisher nearby when using drycleaning solvent.
- Compressed air source will not exceed 30 psi (207 kPa).
- Eyeshields must be worn when cleaning with compressed air.
- Eyeshields must be worn during grinding operations.

WARNING

Eyeshields must be worn during grinding operations. Failure to wear eyeshields may result in injury to personnel.

a. Dressing Grinding Wheel

CAUTION

Intake and exhaust valve seating surface to cylinder head valve seat is critical. Accurate machining is required to provide for perfect sealing of combustion chambers.

1. Position grinder driver and grinder wheel stone on tool holder stand with grinder wheel stone facing down.
2. Position tool holder at 30° and lock screw.
3. Position electric grinder motor above angle quadrant, position chuck on grinder driver, and turn grinder motor switch to "ON" position.
4. Slowly move control handle and draw tool bit across face of grinder wheel stone for test cut.

3-80. VALVE SEAT GRINDING (Contd)

CAUTION

- Do not try to remove a large quantity of grinder material at one time; take several cuts. Failure to do so may result in damage to electric grinder.
- Grinder motor switch must be in "OFF" position before making adjustments to tool bit and tool bit must be away from grinder wheel stone. Failure to do so may result in damage to tool bit.

5. Turn knurled knob clockwise to remove a small amount on grinder wheel stone. Move tool bit back and forth across grinder wheel stone several times to ensure a fill and clean cut has been made.

b. Pre-Grinding Operation

NOTE

Use two boards to support cylinder head to allow valves to clear workbench.

1. Place cylinder head (1) on workbench with valve seats (2) facing up.
2. Place valve guide arbor on valve guide (3) from valve seat (2) side of cylinder head (1).
3. Position grinder driver and grinder wheel stone on valve guide arbor.
4. Position electric grinder motor on grinder driver at chuck.

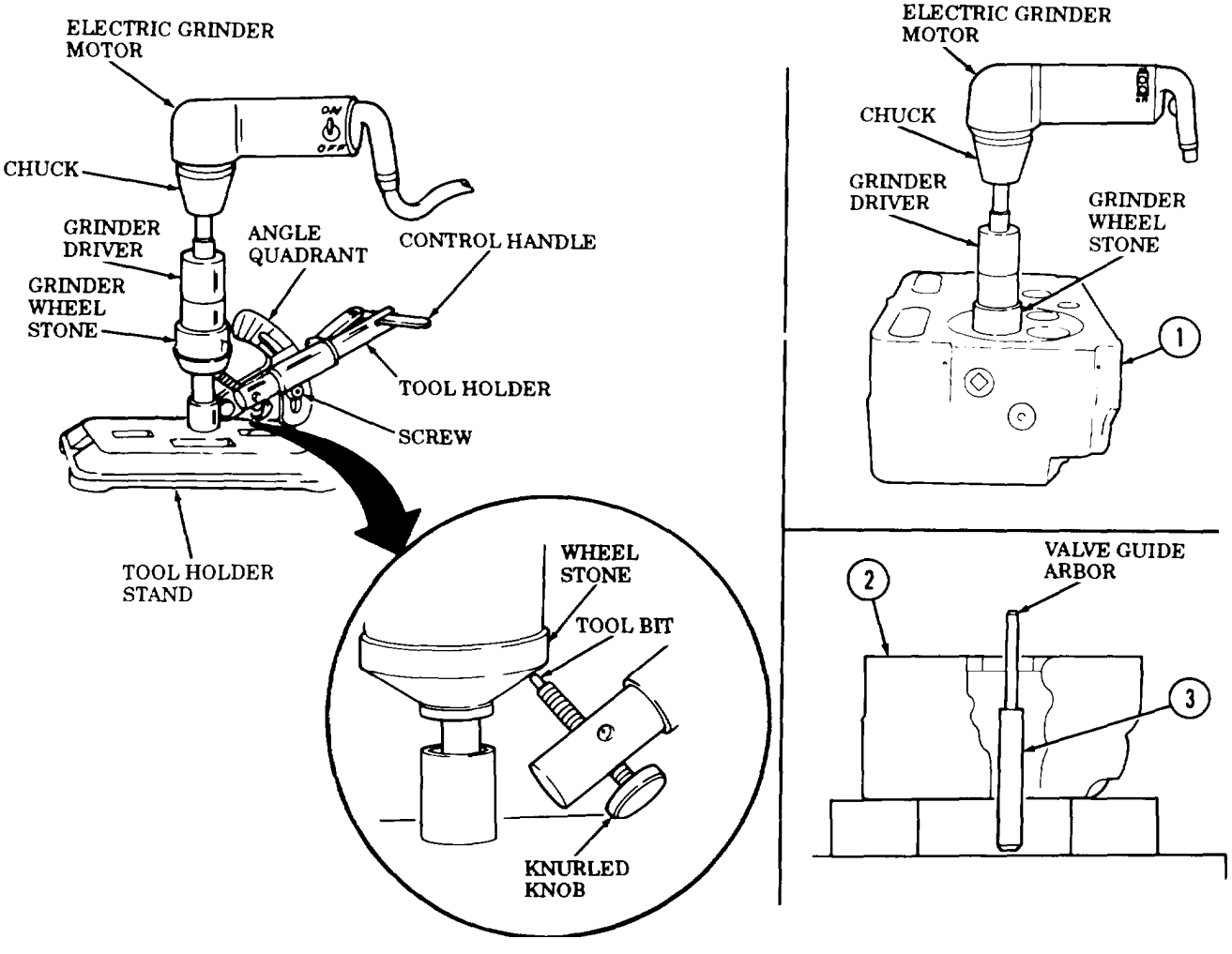

3-80. VALVE SEAT GRINDING (Contd)

c. Valve Seat Grinding

CAUTION

Too much pressure on grinder driver may cause excessive wear on grinder wheel stone, distorting the cut on the valve seat and removing too much material.

NOTE

After each seat has been ground, redress grinder wheel stone to a 30° angle. Grinder wheel stone wears with use.

1. Turn grinder motor switch to "ON" position.

CAUTION

Do not apply side pressure to electric grinder motor. This action will cause the valve seat to grind off-center and cause damage to valve seat.

NOTE

Seat area "A" is 0.063-0.125 in. (1.600-3.175 mm), maximum. Seat area "B" is 0.125 in. (3.175 mm), maximum. If seat area "B" is greater than 0.125 in. (3.175 mm), stock can be removed using a specially dressed valve seat grinder wheel stone.

2. Apply light, vertical pressure on grinder driver and grind valve seat (1).
3. Turn electric grinder motor switch to "OFF position and remove grinder driver and grinder wheel stone from valve guide arbor and cylinder head (2). Leave valve guide arbor in position for gaging valve seats (1).

d. Cleaning

WARNING

- Drycleaning solvent is flammable and will not be used near open flame. Use only in well-ventilated places. Failure to do so may result in injury to personnel.
- Compressed air source will not exceed 30 psi (207 kPa). When cleaning with compressed air, eyeshields must be worn. Failure to wear eyeshields may result in injury to personnel.

1. Using compressed air, blow cylinder head (2) clean of dirt, debris, metal shavings, and grindings.
2. Using a wire brush and drycleaning solvent, clean all valve seats (1) and ports in cylinder head (2).

e. Gaging Valve Seats

1. Position dial indicator on valve guide arbor with indicator finger on valve seat (1).

NOTE

Total valve seat runout must not exceed 0.002 in. (0.0508 mm).

2. Turn dial indicator clockwise two or three turns and observe needle for runout. If valve seat (1) runout exceeds 0.002 in. (0.0508 mm), regrind valve seat (1) and clean cylinder head (2) (subtasks c. and d.).
3. Remove dial indicator from valve guide arbor.
4. Remove valve guide arbor from cylinder head (2).

3-80. VALVE SEAT GRINDING (Contd)

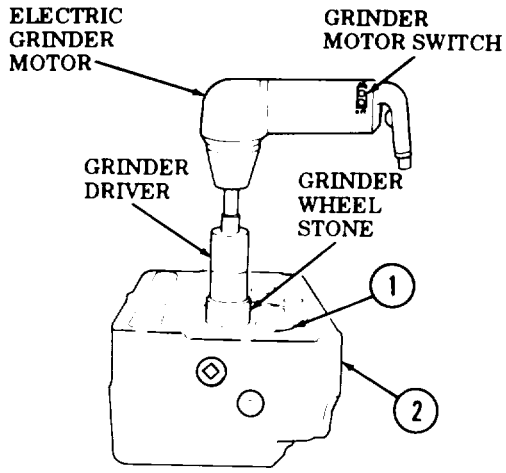

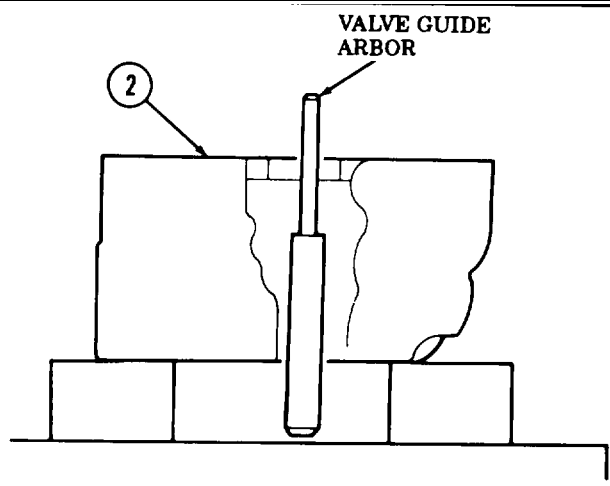

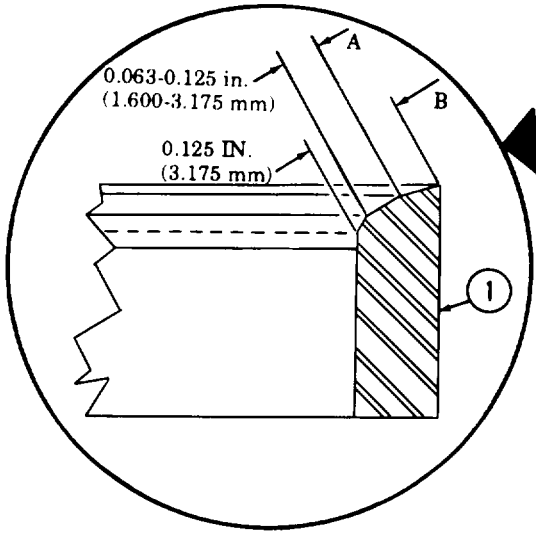

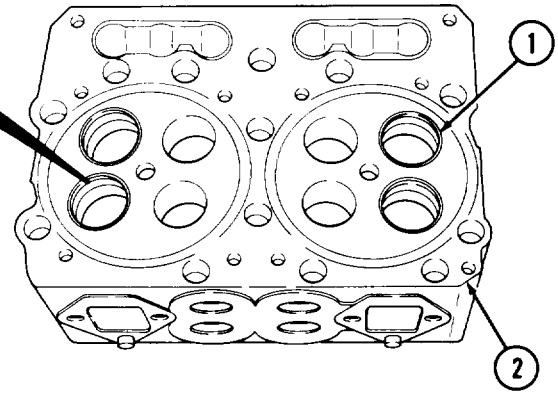

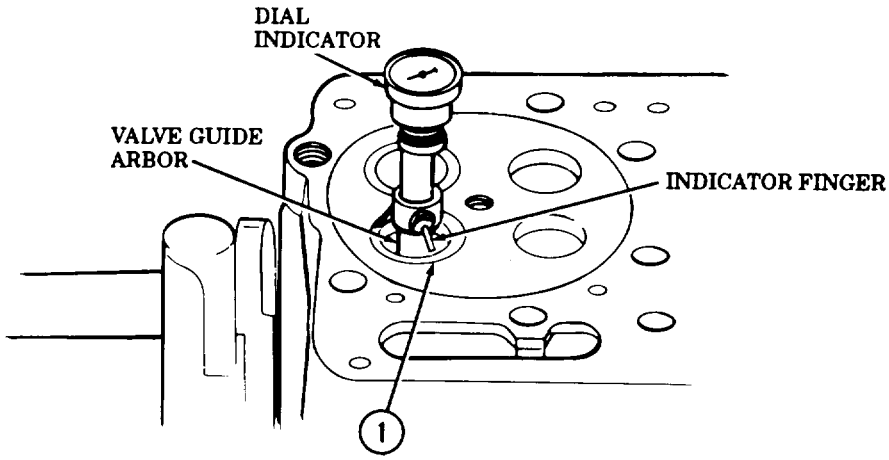

3-80. VALVE SEAT GRINDING (Contd)

f. Lapping Valve Seats

1. Apply a light coat of lubricating oil to stem of valve (2) and apply coarse lapping compound to contact surface of valve (2).
2. Insert valve (2) into cylinder head (1) and lap valve (2) and valve seat (3).

WARNING

Drycleaning solvent is flammable and will not be used near open flame. Use only in well-ventilated places. Failure to do so may result in injury to personnel.

3. Remove valve (2) from cylinder head (1) and clean valve (2) and valve seat (3) using a lint-free cloth and drycleaning solvent.
4. Repeat steps 1 through 3 using fine lapping compound.
5. Apply prussian blue to contact surface of valve seat (3), install valve (2) in cylinder head (1), press down on valve (2), and rotate back and forth.

NOTE

Contact pattern should be a clear ring of 0.0625-0.125 in. (1.5875-3. 175 mm).

6. Remove valve (2) and examine valve (2) and valve seat (3) for contact pattern. If contact pattern is not correct, relap valve(s) (2) and retest (steps 1 through 5).
7. Clean all valves (2) (step 3) and cylinder head (1) (para. 2-8) after all valves (2) and valve seats (3) have been lapped.

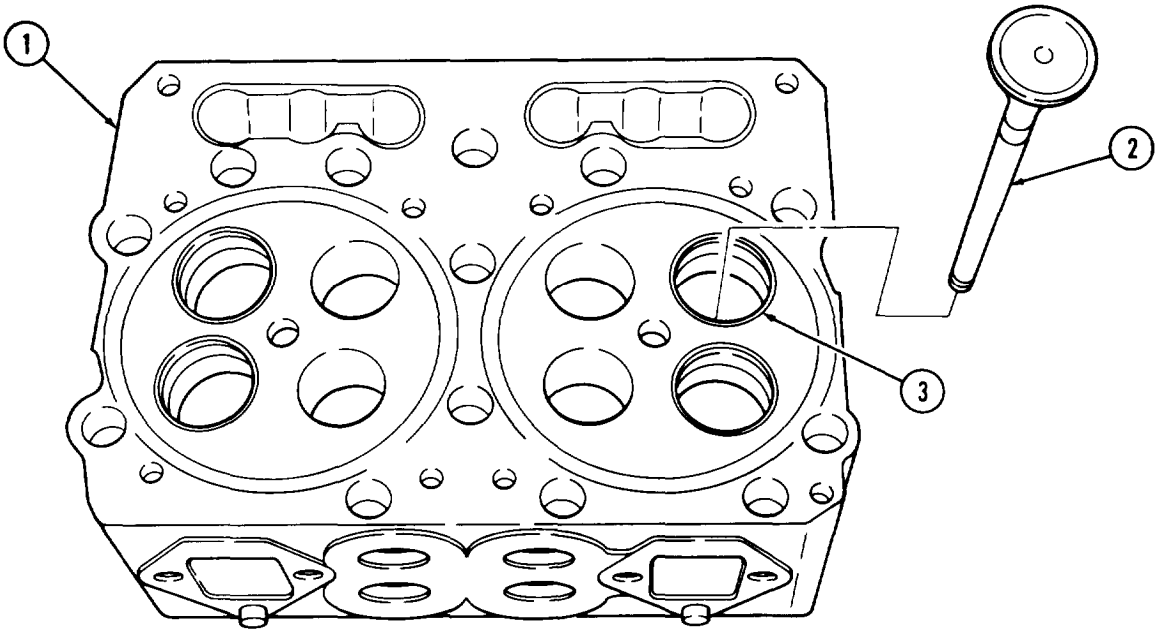

FOLLOW-ON TASK: Assemble cylinder head (para. 3-51).

3-81. ENGINE INJECTOR TIMING INSTRUCTIONS

THIS TASK COVERS:

a. Timing Tool Setup **b. Injector Timing**

INITIAL SETUP

APPLICABLE MODELS
All

TOOLS
General mechanic's tool kit (Appendix B, Item 1)
Two dial indicators (Appendix B, Item 11)
Timing fixture (Appendix B, Item 56)

REFERENCES (TM)
TM 9-2320-260-34 P-1

EQUIPMENT CONDITION
- Engine mounted on repair stand (para. 3-29).
- Rocker lever housing covers removed (para. 3-36).
- Rocker lever housing and push tube removed (para. 3-37).
- Crossheads removed (para. 3-39).

a. Timing Tool Setup

NOTE

- This timing procedure is for engines mounted on test stand only.
- The precise timing of the injector push tube travel with corresponding piston travel is accomplished by using injector timing fixture, 3375522, to measure travel of these two parts.
- Adjustments to injection timing are made by altering the thickness of cam follower gaskets or adding or removing cam follower gaskets.
- Ensure camshaft is pushed back against rear of cylinder block for zero (0) end play.
- Each dial indicator used must have a total travel of at least 0.250 in. (6.35 mm).

1. Position timing fixture in injector sleeve (2) and engage rod of push tube indicator in injector push tube socket.
2. Install timing fixture by hand tightening knurled holddowns evenly. Ensure timing fixture is straight on cylinder head (1).

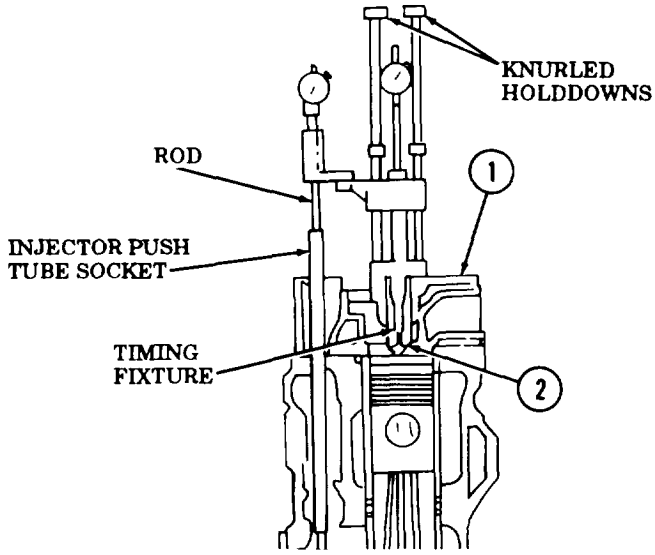

3-81. ENGINE INJECTOR TIMING INSTRUCTIONS (Contd)

b. Injector Timing

1. Loosen both dial indicator supports on timing fixture.

NOTE

At Top Dead Center (TDC), piston travel plunger will be near the top of its travel.

2. Rotate crankshaft (1) in direction of engine rotation to TDC.
3. Adjust both dial indicators on timing fixture to their fully compressed position.
4. Raise both dial indicators approximately 0.020 in. (0.51 mm) and lock in place with setscrew.

NOTE

- Both dial indicators move in the same direction when piston is on compression stroke.
- TDC is indicated by maximum clockwise position of the pointer on the dial indicator.

5. Rotate crankshaft (1) back and forth to ensure piston is precisely at TDC on compression stroke.
6. Turn piston travel dial indicator face to aline zero with pointer. Lock dial indicator face with thumbscrew.

NOTE

At After Top Dead Center (ATDC), piston travel plunger will be near bottom of its travel.

7. Rotate crankshaft (1) in direction of engine rotation to 90° ATDC.
8. Turn push tube travel dial indicator face to aline zero with pointer. Lock face with thumbscrew.

NOTE

Step 9 is necessary to remove gear train lash.

9. Rotate crankshaft (1) in opposite direction of engine rotation through TDC to 45° Before Top Dead Center (BTDC).
10. Turn crankshaft (1) in direction of engine rotation until piston follower rod on timing fixture is in contact with dial indicator stem.
11. Move crankshaft (1) very slowly until piston travel dial indicator reads 0.0032 in. (0.0813 mm) before zero.

NOTE

The position of piston travel is now 19° BTDC.

12. Read push tube travel dial indicator. Push tube travel should read 0.0290 in. (0.7366 mm).
    a. If push tube travel is not 0.0290 in. (0.7366 mm), proceed to step 13.
    b. If push tube travel is 0.0290 in. (0.7366 mm), proceed” to follow-on task.

3-81. ENGINE INJECTOR TIMING INSTRUCTIONS (Contd)

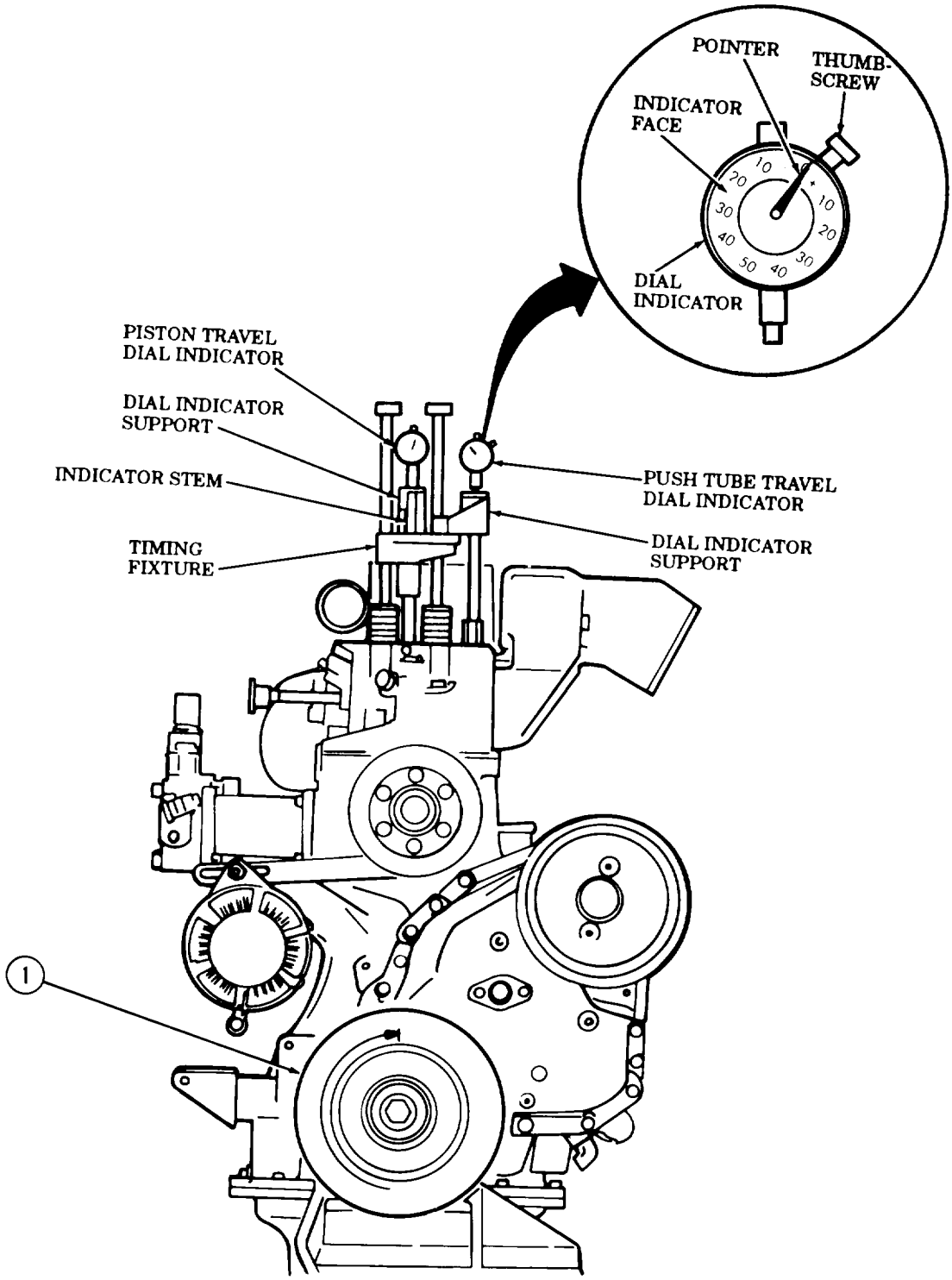

3-81. ENGINE INJECTOR TIMING INSTRUCTIONS (Contd)

13. Ensure cam follower housing screws are tightened 30-35 lb-ft (4 1-47 N•m) (para. 3-61).
14. Check position of both dial indicators. Ensure dial indicators are not bottoming or binding.
15. Ensure engine is at TDC (step 2).
16. Recheck timing (steps 3 through 11).
17. If timing is still incorrect, add or remove cam follower gaskets (para. 3-41). Add gaskets to advance timing remove gaskets to retard timing.
18. Remove timing fixture from engine (1).

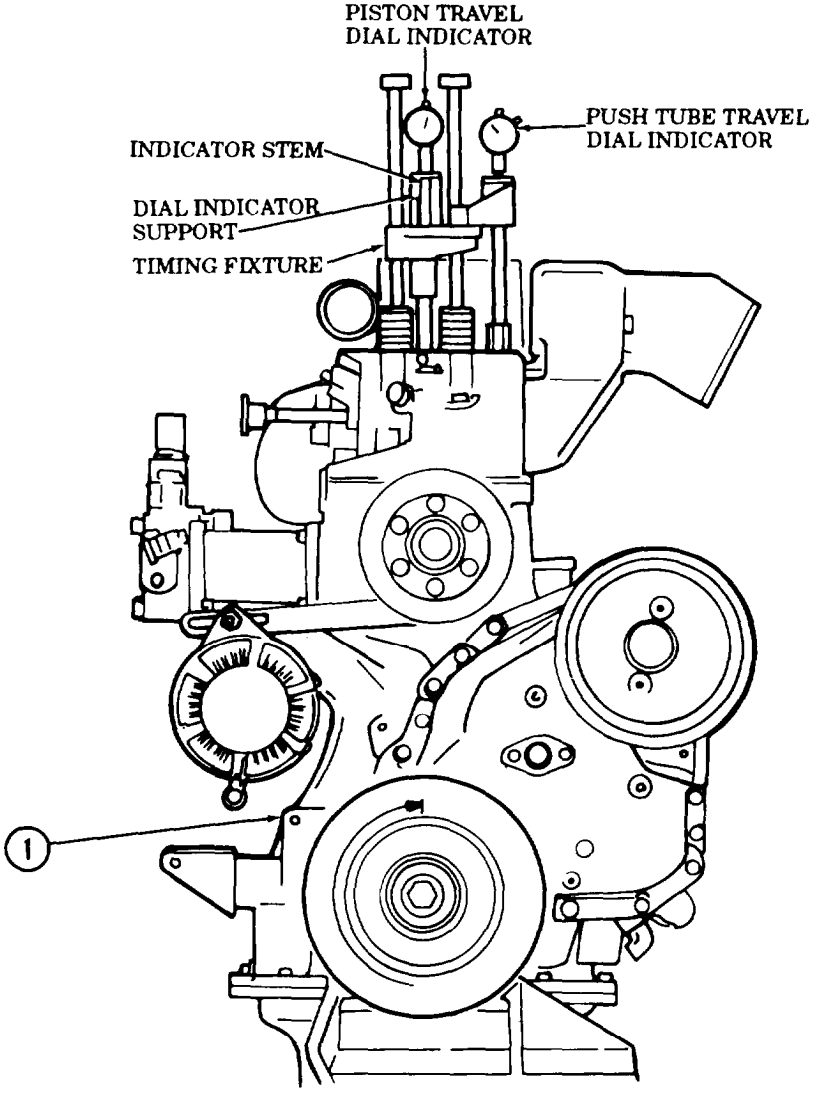

FOLLOW-ON TASKS:
- Install crossheads (para, 3-63).
- Adjust crossheads (para. 3-16).
- Install rocker lever housings and push tubes (para. 3-64).
- Install rocker lever housing covers (para. 3-65).
- Remove engine from repair stand (para. 3-75).

3-82. INJECTOR AND VALVE ADJUSTMENT (DIAL INDICATOR METHOD)

THIS TASK COVERS:

a. Checking Plunger Free Travel **b. Injector and Valve Adjustment**

INITIAL SETUP

APPLICABLE MODELS
All

TOOLS
General mechanic's tool kit (Appendix B, Item 1)
Injector and valve adjustment kit (Appendix B, Item 57)
Torque wrench adapter (Appendix B, Item 59)
Dial indicator (Appendix B, Item 11)
Feeler gage (Appendix B, Item 58)
Torque wrench, 1/2-in. dr. (Appendix B, Item 3)

REFERENCES (TM)
TM 9-2320-260-10
TM 9-2320-260-20
TM 9-2320-260-34P-1

EQUIPMENT CONDITION
- Fuel shutoff valve is in OFF Position (TM 9-2320-260-10).
- Battery ground cable disconnected (TM 9-2320-260-20).
- Rocker lever housing covers removed (para. 3-14),
- Valve crossheads adjusted (para. 3-16).

GENERAL SAFETY INSTRUCTIONS
If task is being performed while engine is in vehicle, ensure fuel shutoff valve is in OFF position and battery ground cable is disconnected to prevent engine from starting.

a. Checking Plunger Free Travel

WARNING

If task is being performed while engine is in vehicle, ensure fuel shutoff valve is in OFF position and battery ground cable is disconnected to prevent engine from starting. Failure to do this may result in injury to personnel.

CAUTION

This procedure is for non-top stop injectors. It is used to prevent excessive loading of the injector actuating systems and possible failure.

NOTE

- Loosening all injector rocker lever adjusting screws and locknuts will help indicate which cylinders have been adjusted and those cylinders that still need to be adjusted.
- All injectors and valves are adjusted the same. This procedure covers the injector and valve adjustment for one cylinder head.

3-82. INJECTOR AND VALVE ADJUSTMENT (DIAL INDICATOR METHOD) (Contd)

1. Loosen locknut(4) one full turn on injector rocker lever (5).
2. Loosen adjusting screw (3) one full turn on injector rocker lever (5).
3. Install dial indicator on water manifold (2) side of rocker lever housing (1) and position dial indicator extension arm on top of injector plunger (6).

NOTE

Injector plunger free travel must not exceed 0.206 in. (5.23 mm) on any injector plunger. If injector plunger free travel exceeds 0.206 in. (5.23 mm) on any injector plunger, the torque method of adjustment must be used (para. 3-83).

4. Rotate engine at crankshaft and record the total amount of free travel at injector plunger (6).
5. Check and record the total amount of free travel at all injector plungers (6) (steps 1 through 4).
6. If free travel of all injector plungers (6) is less than 0.206 in. (5.23 mm), reset dial indicator, position on No. 3 cylinder, and proceed to injector and valve adjustment (subtask b.).

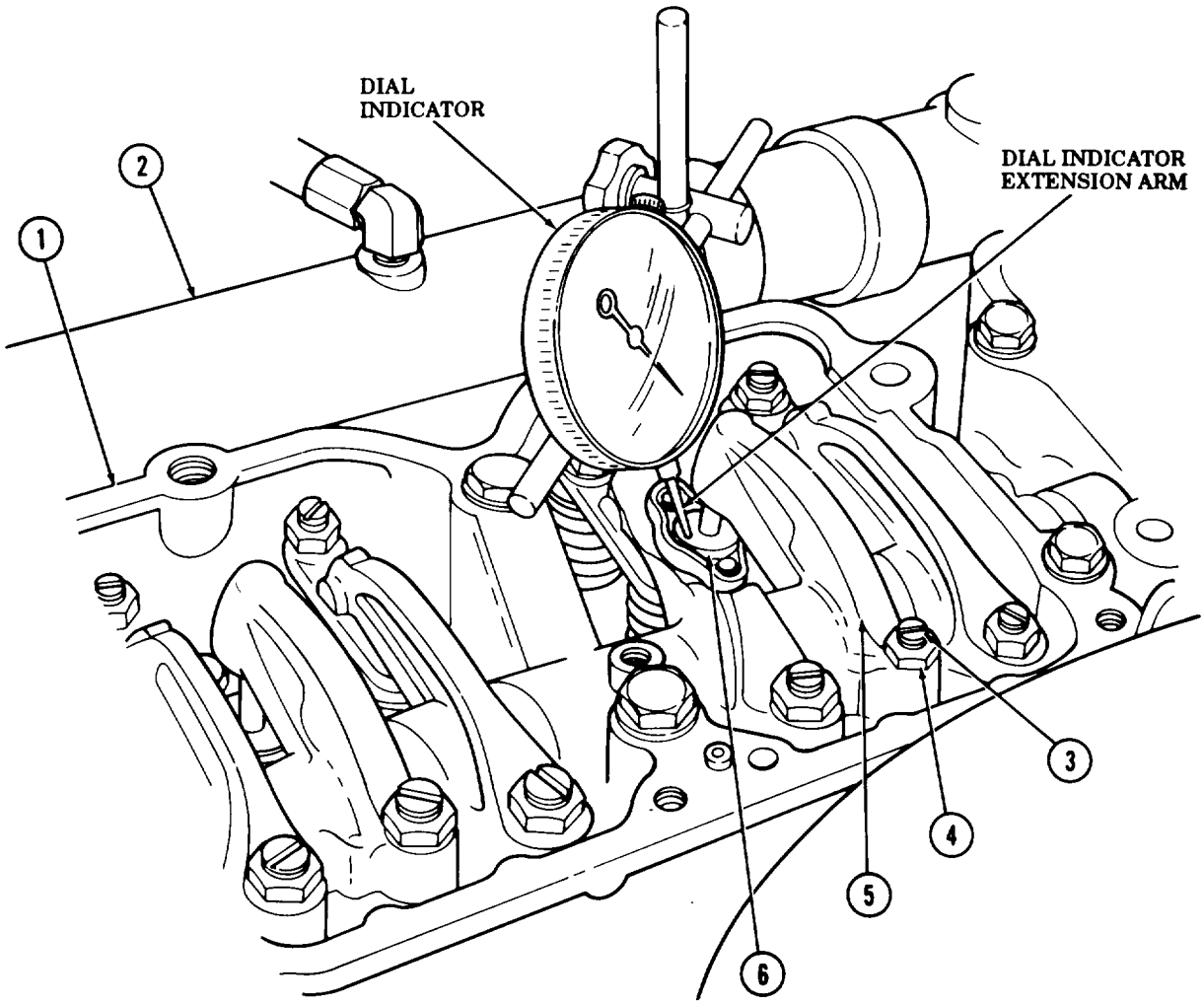

3-82. INJECTOR AND VALVE ADJUSTMENT (DIAL INDICATOR METHOD) (Contd)

b. Injector and Valve Adjustment

NOTE

- During rebuild, injectors and valves are “cold set” with temperature of oil and component parts within 10°F (-12°C) of ambient air or room temperature. Final “hot set” adjustments must be made when engine is at operating temperature. When warming engine for hot adjust, ensure rocker cover is installed.
- The injector and valve adjusting procedures below and in the referenced “table of specifications” requires that the injectors be adjusted before the valves.
- Perform this procedure for non-top stop injectors.

1. Rotate accessory drive pulley (8) until the timing mark (9), 1-6 “VS”, is alined with pointer (10) on gearcase cover (7).

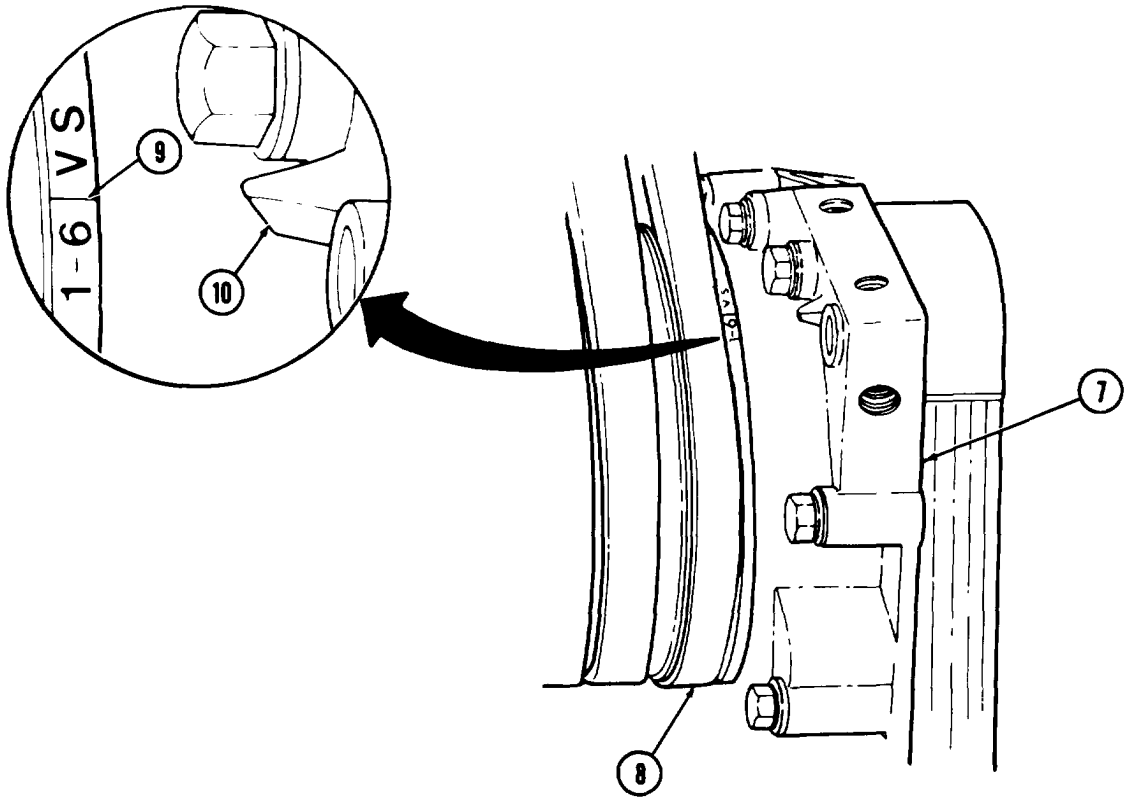

3-82. INJECTOR AND VALVE ADJUSTMENT (DIAL INDICATOR METHOD) (Contd)

NOTE

Both valve rocker levers for cylinder No. 5 must be free (valves closed), and injector plunger for cylinder No. 3 must be at top of travel before beginning adjustments.

2. Ensure both No. 5 intake (1) and exhaust (2) rocker levers on cylinder No. 5 are free (in closed position) by shaking levers with hand; valve springs must not be compressed.
3. Ensure injector plunger (6) on cylinder No. 3 is at top of travel. If injector plunger (6) is not at top of travel, rotate accessory drive pulley (9) 360° and realine timing mark (10), 1-6 “VS”, with pointer (11) on gearcase cover (8).
4. Turn adjusting screw (3) on rocker lever (4) down until injector plunger (6) link pin (5) contacts lever cup (7).
5. Advance adjusting screw (3) 15° to squeeze oil from lever cup (7) and then loosen adjusting screw (3) several turns.

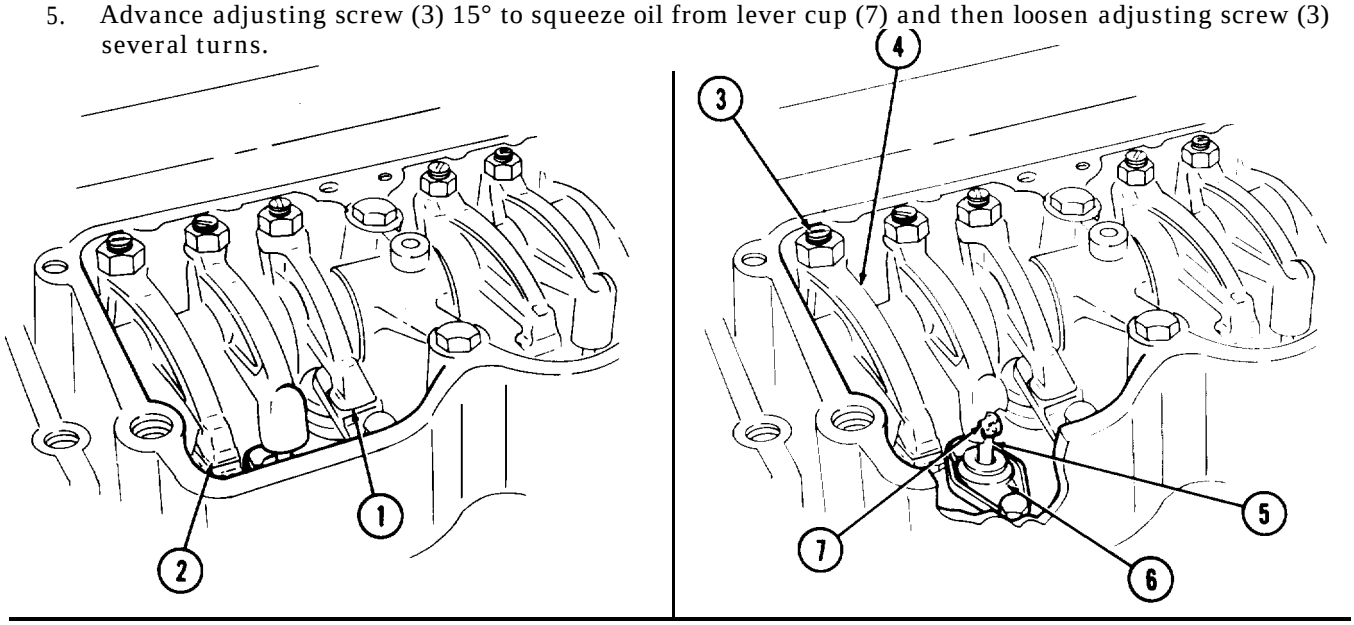

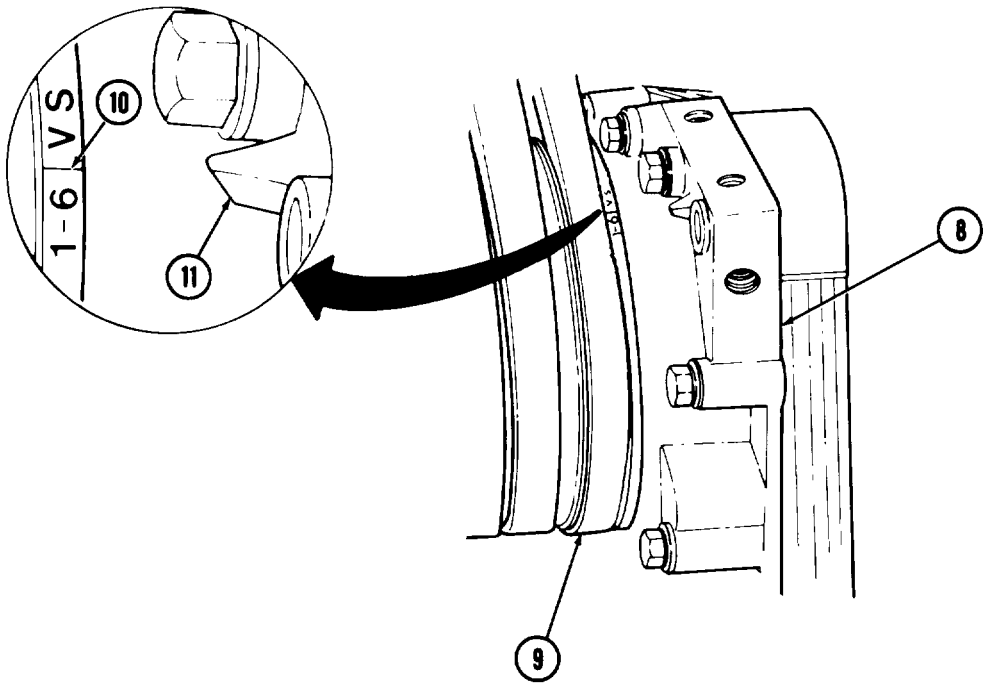

3-82. INJECTOR AND VALVE ADJUSTMENT (DIAL INDICATOR METHOD) (Contd)

6. Position dial indicator extension arm on top of injector plunger (6).
7. Press rocker lever (4) down toward the fuel injector until injector plunger (6) is bottomed.
8. Release rocker lever (4) and allow injector plunger (6) to rise, then press injector plunger (6) to bottom again. Ensure injector plunger (6) is bottomed.
9. Set dial indicator to zero and check injector plunger (6) travel by releasing injector plunger (6) and allowing it to rise. Correct injector plunger (6) travel is 0.169-0.171 in. (4.29-4.34 mm). If injector plunger (6) travel is correct, proceed to step 13.
10. Turn adjusting screw (3) until dial indicator reads 0.170 in. (4.32 mm).
11. Tighten locknut (12) 40-45 lb-ft (54-61 N•m).
12. Recheck injector plunger (6) travel (steps 6 through 8).

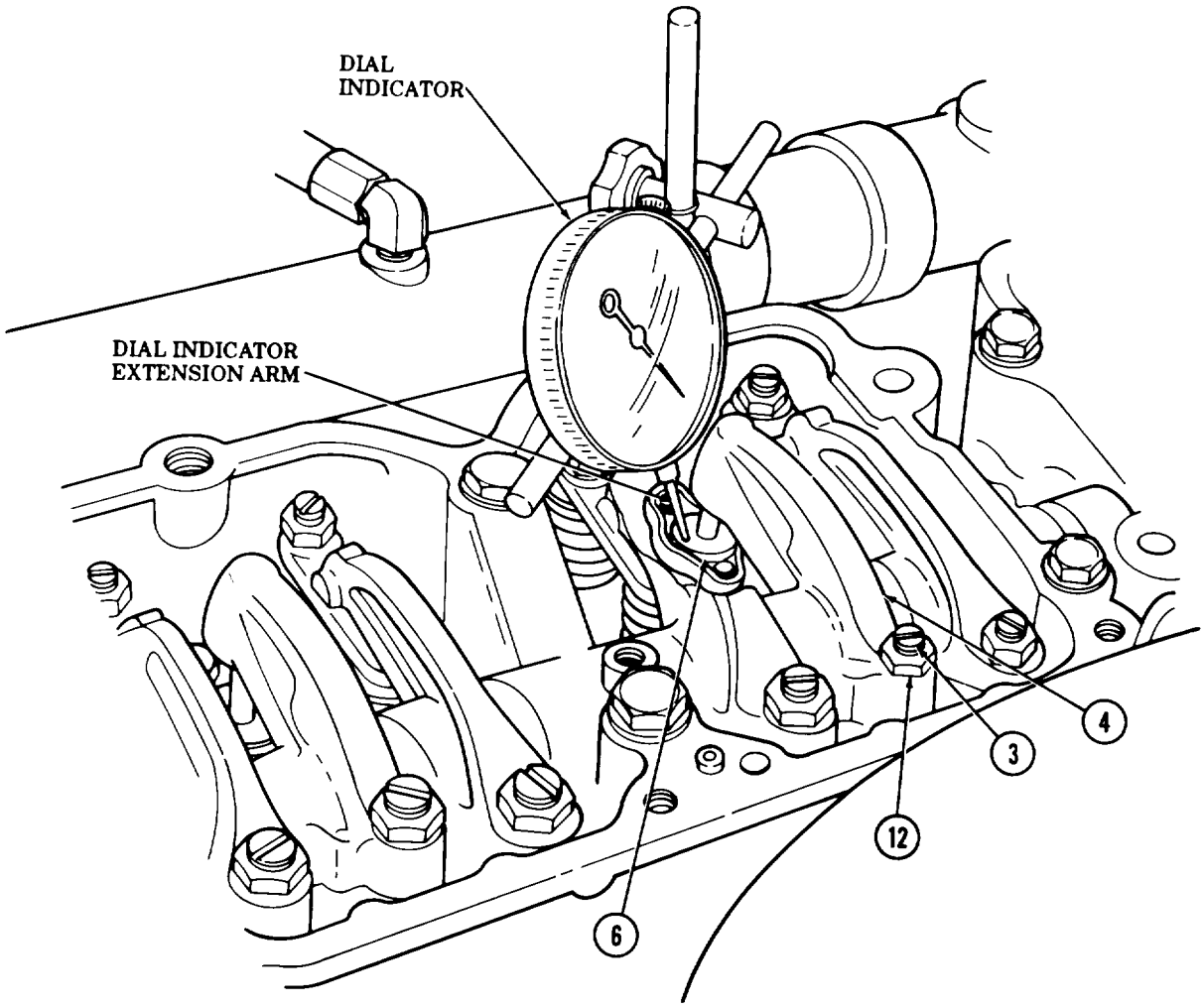

3-82. INJECTOR AND VALVE ADJUSTMENT (DIAL INDICATOR METHOD) (Contd)

13. Loosen locknut (1) on intake rocker lever (3) of cylinder No. 5 and back out adjusting screw (2).

NOTE

Clearance for cold-set intake valves is 0.011 in. (0.28 mm).
Clearance for cold-set exhaust valves is 0.027 in. (0.69 mm).

14. Using feeler gage, measure clearance between intake rocker lever (3) nose and crosshead (4).
15. Slowly turn adjusting screw (2) until intake rocker lever (3) nose touches feeler gage. There will be a slight drag on feeler gage when clearance is correct.

NOTE

Ensure adjusting screw does not move when tightening locknut.

16. When clearance is correct, hold adjusting screw (2) in place with screwdriver and tighen locknut (1) 40-45 lb-ft (54-61 N•m).
17. Perform adjustment procedures (steps 13 through 16) on exhaust rocker lever.

NOTE

- After each set of injector and valve adjustments, advance pulley to next timing mark and adjust injector and valve until all timing is complete.
- Two complete revolutions of the pulley are required to adjust all injectors and valves.

18. Advance accessory drive pulley (6) until the next timing mark (7) (table 3-6, Injector and Valve Set Position) is alined with the pointer (8) on gearcase (5) and perform injector and valve adjustments (steps 1 through 17) indicated in table 3-6, Injector and Valve Set Position.

Table 3-6. Injector and Valve Set Position.

ROTATION DIRECTION	PULLEY POSITION	ADJUST CYLINDER	
		INJECTOR	VALVE
Start	1-6 "VS"	3	5
Advance to	2-5 "VS"	6	3
Advance to	3-4 "VS"	2	6
Advance to	1-6 "VS"	4	2
Advance to	2-5 "VS"	1	4
Advance to	3-4 "VS"	5	1

3-82. INJECTOR AND VALVE ADJUSTMENT (DIAL INDICATOR METHOD) (Contd)

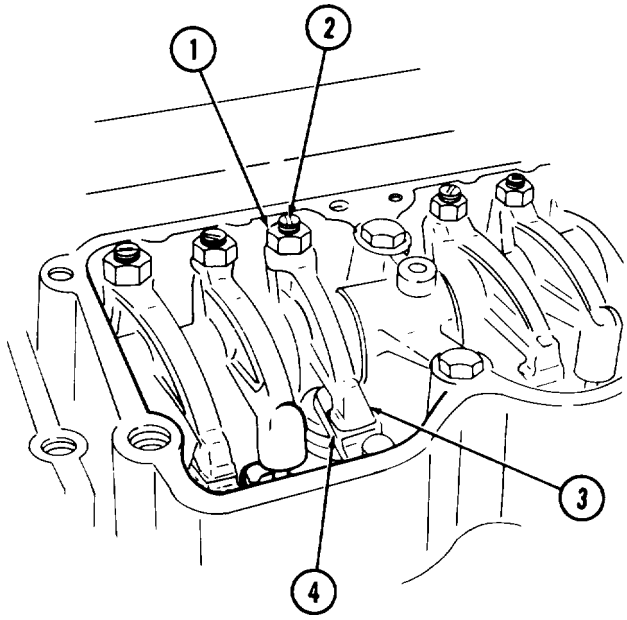

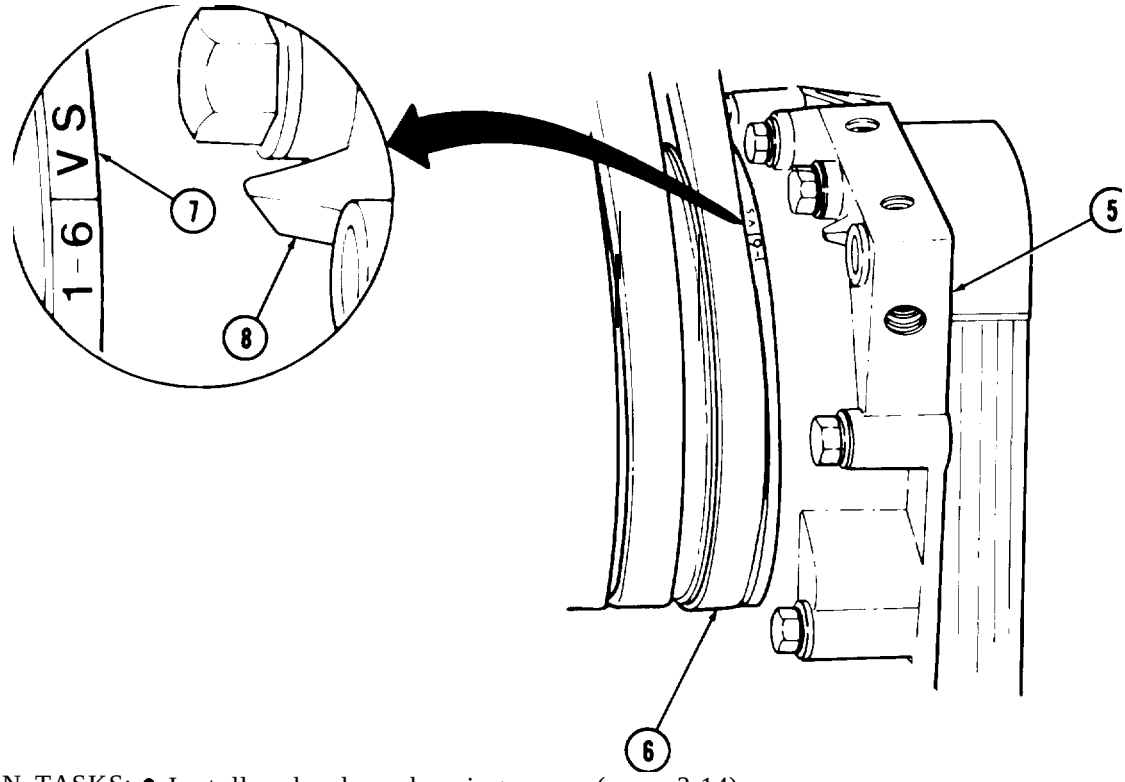

FOLLOW-ON TASKS:
- Install rocker lever housing covers (para. 3-14).
- Connect battery ground cable (TM 9-2320-260-20).
- Fuel shutoff valve in ON position (TM 9-2320-260-10).
- Start engine (TM 9-2320-260- 10), run until normal operating temperature is reached, and check for leaks.

3-83. INJECTOR AND VALVE ADJUSTMENT (TORQUE METHOD)

THIS TASK COVERS:

a. Pre-Adjustment Setup **b. Injector and Valve Adjustment**

INITIAL SETUP

APPLICABI.E MODELS
All

TOOLS
General mechanic's tool kit (Appendix B, Item 1)
Feeler gage (Appendix B, Item 58)
Torque wrench, 3/8-in. dr. (Appendix B, Item 4)
Torque wrench, 1/2-in. dr. (Appendix B, Item 3)

REFERENCES (TM)
TM 9-2320-260-10
TM 9-2320-260-20
TM 9-2320-260-34P-1

EQUIPMENT CONDITION
- Fuel shutoff valve in OFF position (TM 9-2320-260-10).
- Battery ground cable disconnected (TM 9-2320-260-20).
- Rocker lever housing covers removed (para. 3-14).
- Valve crossheads adjusted (para. 3-16).

GENERAL SAFETY INSTRUCTIONS
If task is being performed while engine is in vehicle, ensure fuel shutoff valve is in OFF position and battery ground cable is disconnected to prevent engine from starting.

WARNING

If adjustment is being performed while engine is in vehicle, ensure fuel shutoff valve is in OFF position and battery ground cable is disconnected to prevent engine from starting. Failure to do so may result in injury to personnel.

a. Pre-Adjustment Setup

CAUTION

This procedure is for non-top stop injectors. It is used to prevent excessive loading of the injector actuating system and possible failure.

NOTE

- Injector plungers are adjusted before valves are adjusted.
- Loosening all injector rocker lever adjusting screws and locknuts will help indicate which cylinders have been adjusted and those cylinders that still need to be adjusted.
- All injectors and valves are adjusted the same. This procedure covers the injection and valve adjustment for one cylinder head.

1. Loosen six locknuts (3) one full turn on six injector rocker levers (1).
2. Loosen six adjusting screws (2) one full turn on six injector rocker levers (1).
3. Turn accessory drive pulley (5) on gearcase (4) in direction of operating rotation until timing mark (6), 1-6 “VS”, aline with pointer (7) on gearcase cover (4).

3-83. INJECTOR AND VALVE ADJUSTMENT (TORQUE METHOD) (Contd)

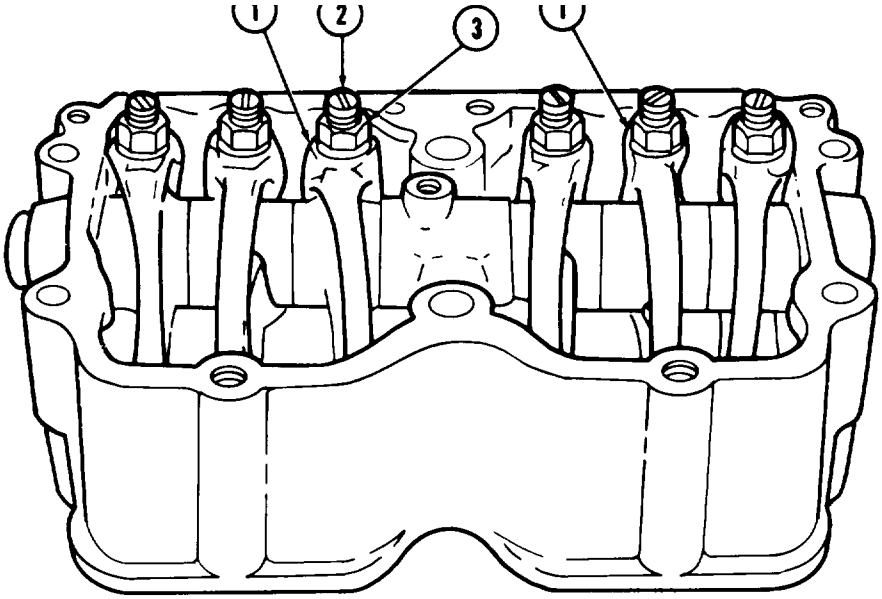

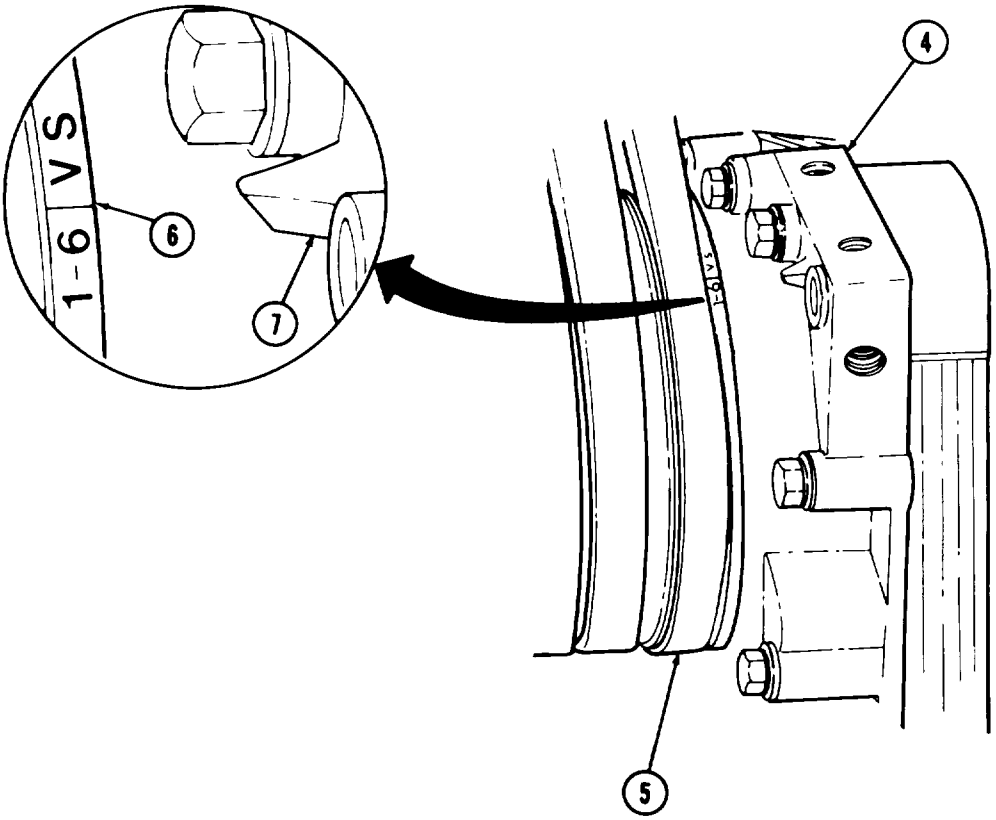

3-83. INJECTOR AND VALVE ADJUSTMENT (TORQUE METHOD) (Contd)

b. Injector and Valve Adjustment

NOTE

- During rebuild, injectors and valves are "cold set" with oil and component parts temperature within 10°F (-12°C) of ambient air or room temperature.
- The injector and valve adjusting procedure below requires that injectors be adjusted before valves.

1. Loosen locknut (4) on injector rocker lever (2).
2. Turn adjusting screw (3) down until top of plunger (5) contacts cup (1).
3. Advance adjusting screw (3) 15° to squeeze oil from cup (1).
4. Back out adjusting screw (3) one full turn. Ensure spring retainer (8) is against adjusting screw (6) of injector (7).

NOTE

When tightening adjusting screw, set the torque wrench on value required and pull to "0." Break adjusting screw loose each time and pull to torque value shown in each tightening pass.

5. Tighten adjusting screw (3), making two or three passes with torque wrench, 72 lb-in. (8.1 N•m).

NOTE

Perform step 6 for top stop injectors.

6. Tighten adjusting screw (3) 5-6 lb-in. (0.6-0.7 N•m).
7. Tighten locknut (4) 40-45 lb-ft (54-61 N•m).

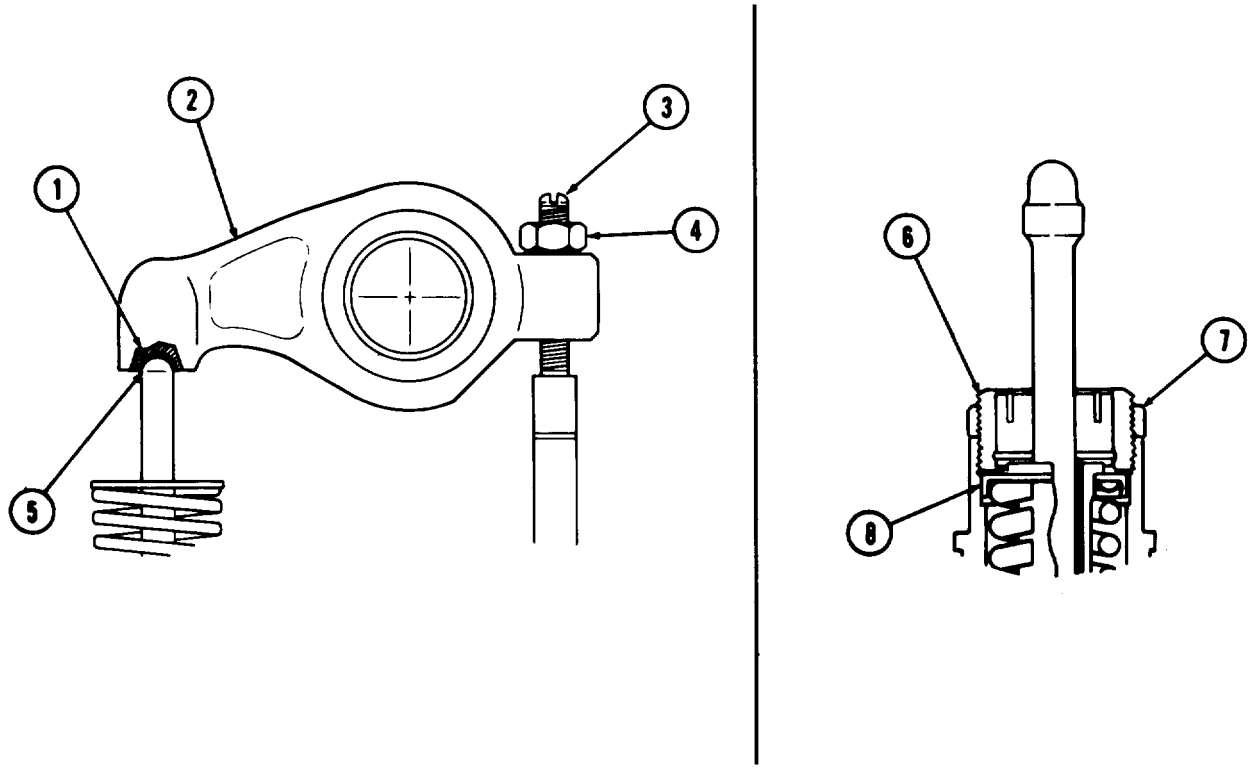

3-83. INJECTOR AND VALVE ADJUSTMENT (TORQUE METHOD) (Contd)

CAUTION

Before checking or setting valve clearance, ensure crossheads are adjusted (para. 3-16).

NOTE

Crossheads operate two valves with one rocker lever. Crosshead adjustments are necessary to ensure equal operation of each valve.

8. Loosen locknut (4) on adjusting screw (3) of crosshead (13).
9. Back out adjusting screw (3) one full turn.
10. Using light finger pressure on rocker lever contact surface (9), hold crosshead (13) against valve stem (11).
11. Turn adjusting screw (3) down until adjusting screw (3) touches valve stem (12).
12. Tighten locknut (4) 22-26 lb-ft (30-35 N•m.

NOTE

Ensure adjusting screw does not move when tightening locknut.

13. While holding adjusting screw (3) with screwdriver, tighten locknut (4) 25-30 lb-ft (34-41 NŽm).
14. Using feeler gage, check clearance between crosshead (13) and valve spring retainer (10). There must be a minimum clearance of 0.020 in, (0.51 mm).

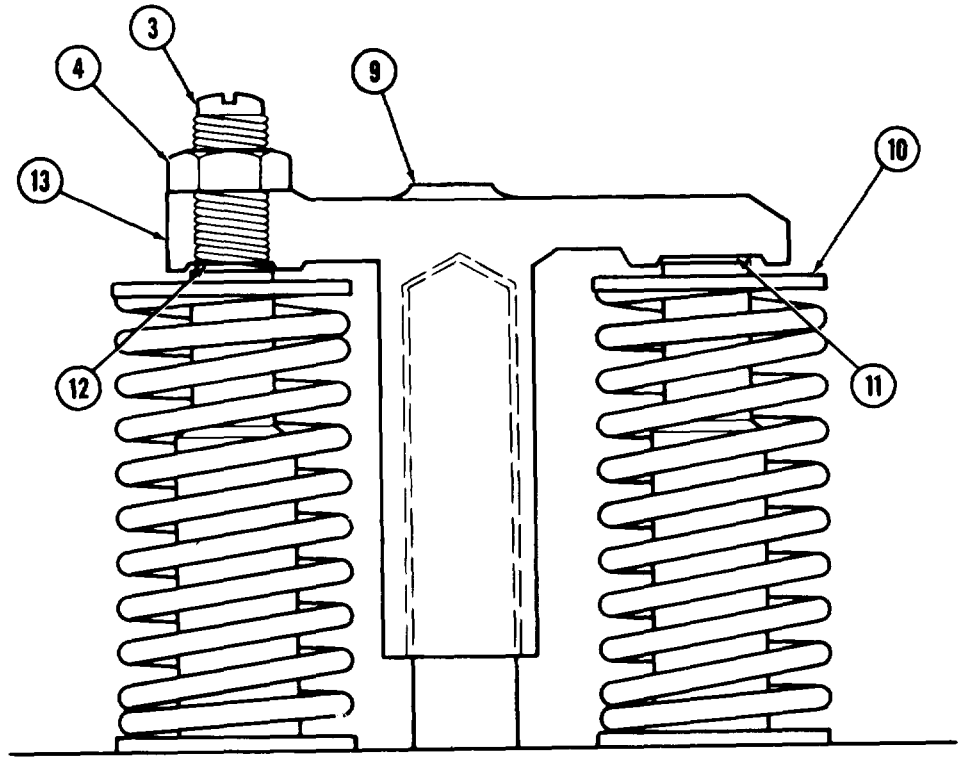

3-83. INJECTOR AND VALVE ADJUSTMENT (TORQUE METHOD) (Contd)

15. Loosen locknut (1) on intake rocker lever (3) and back out adjusting screw (2).

NOTE

Clearance for cold-set intake valves is 0.014 in. (0.36 mm).
Clearance for cold-set exhaust valves is 0.027 in. (0.69 mm).

16. Using feeler gage, measure clearance between intake rocker lever (3) nose and crosshead (4).
17. Slowly turn adjusting screw (2) down until intake rocker lever (3) touches feeler gage. There will be a slight dragon feeler gage when clearance is correct.

NOTE

Ensure adjusting screw does not move when tightening locknut.

18. When clearance is correct, hold adjusting screw (2) in place with screwdriver and tighten locknut (1) 40-45 lb-ft (54-61 NŽm).
19. Perform adjustment procedures (steps 15 through 18) on exhaust rocker lever (5).

NOTE

- After each set of injector and valve adjustments, advance pulley to next timing mark and adjust injector and valve until all timing is complete.
- Two complete revolutions of the pulley are required to adjust all injectors and valves.

20. Advance accessory drive pulley (7) on gearcase (6) in direction of operating rotation until next timing mark (8) (table 3-7, Injector and Valve Set Position) alines with pointer (9) on gearcase (6). Perform injector and valve adjustments (steps 1 through 19) as indicated in table 3-7, Injector and Valve Set Position.

Table 3-7. Injector and Valve Set Position.

ROTATION DIRECTION	PULLEY POSITION	ADJUST CYLINDER	
		INJECTOR	VALVE
start	1-6 'VS"	3	5
Advance to	2-5 "VS"	6	3
Advance to	3-4 'VS"	2	6
Advance to	1-6 'VS"	4	2
Advance to	2-5 "VS"	1	4
Advance to	3-4 'VS"	5	1

3-83. INJECTOR AND VALVE ADJUSTMENT (TORQUE METHOD) (Contd)

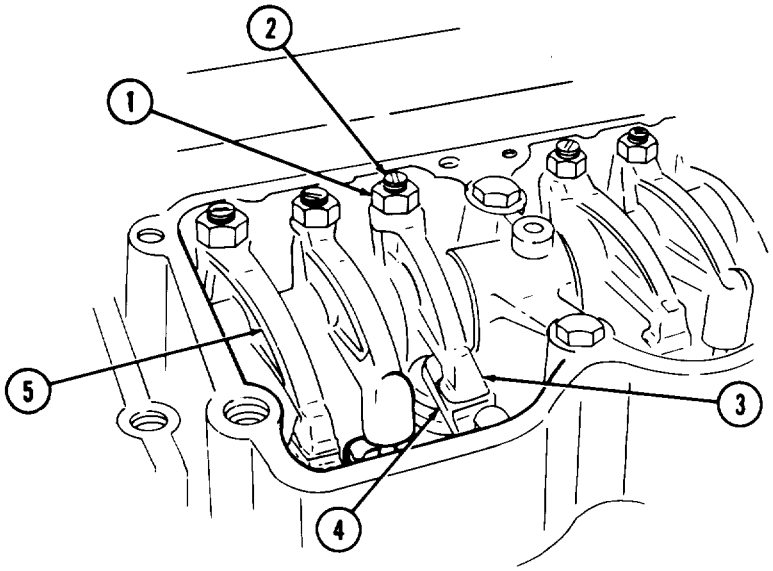

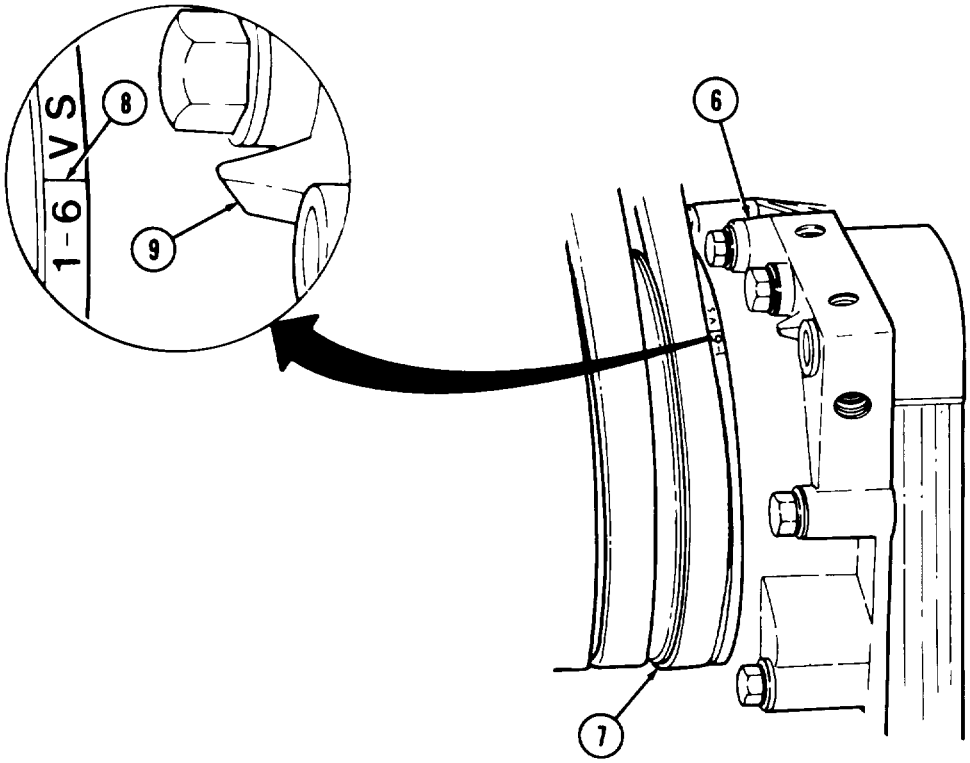

FOLLOW-ON TASKS:
- Install rocker lever housing covers (para. 3-14).
- Connect battery ground cable (TM 9-2320-260-20).
- Fuel shutoff valve in ON position (TM 9-2320-260-10).
- Start engine (TM 9-2320-260-10), run until normal operating temperature is reached, and check for leaks.

3-84. TOP STOP INJECTOR PLUNGER TRAVEL ADJUSTMENT

THIS TASK COVERS:

Adjustment

INITIAl SETUP

APPLICABLE MODELS
All

TOOLS
Top stop setting fixture (Appendix B, Item 150)
Holding bracket (Appendix B, Item 152)
Injector plunger link (Appendix B, Item 153)
Injector adjusting tool (Appendix B, Item 154)

TOOLS
Injector locknut wrench (Appendix B, Item 25)
Torque wrench. 3/8-in. dr. (Appendix B. Item 4)
Crowsfoot wrench (Appendix B, Item 151)

EQUIPMENT CONDITION
Fuel injectors cleaned (non-top stop) (para. 5-7), (top stop) (para. 5-8).

Adjustment

CAUTION

This procedure is for top stop injectors. It is used to prevent excessive loading of the injector actuating system and possible failure.

NOTE

Use top stop setting fixture (3822696) to adjust top stop fuel injector plunger travel.

1. Place deadweight switch (2) in RAISE position.
2. Place plunger switch (3) in UNLOAD position.

NOTE

Air pressure setting must be maintained throughout adjustment procedure.

3. Turn air pressure adjust knob (1) to adjust air pressure to 77-83 psi (531-572 kPa).
4. Place digimatic indicator (5) and digimatic presetter power switches (4) to ON position.
5. Remove plunger (7) from fuel injector (8).
6. Install compressed spring (11), spring retainer (10), and plunger (7) in fuel injector (8).
7. Thread locknut assembly (9) into fuel injector (8) until locknut assembly (9) contacts fuel injector (8).

3-84. TOP STOP INJECTOR PLUNGER TRAVEL ADJUSTMENT (Contd)

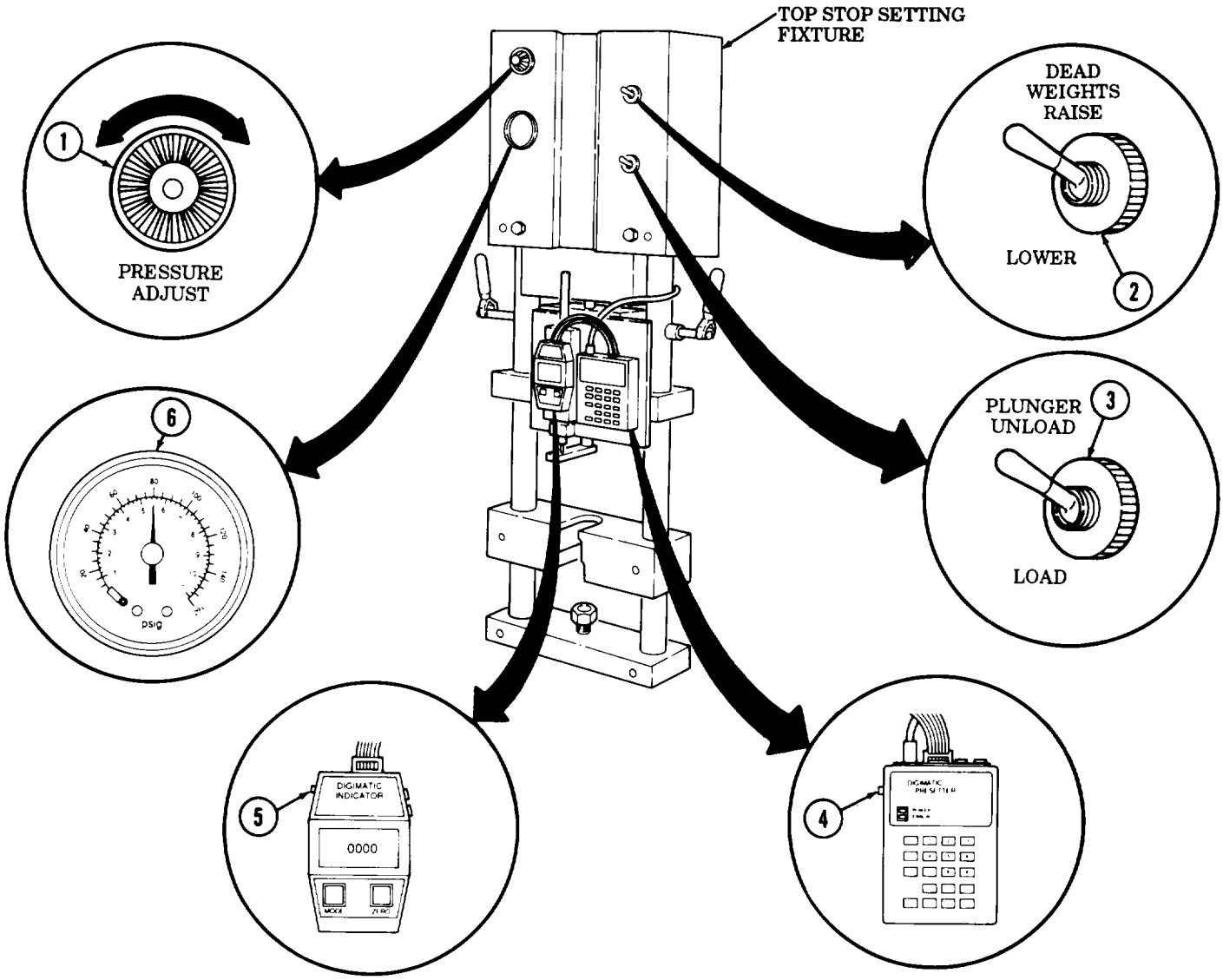

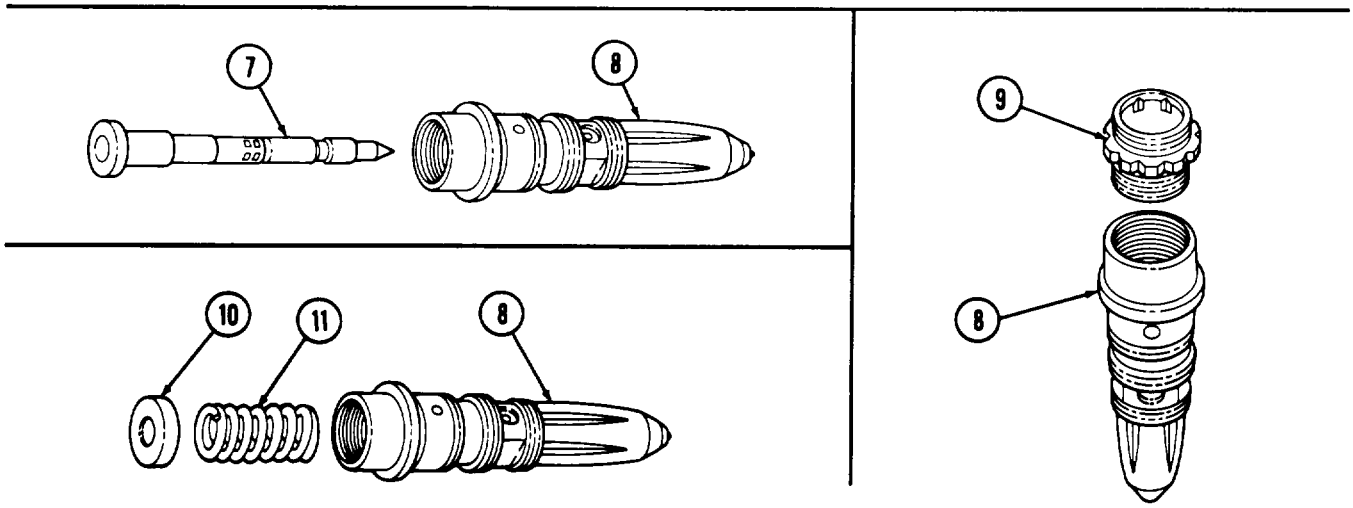

3-84. TOP STOP INJECTOR PLUNGER TRAVEL ADJUSTMENT (Contd)

8. Install holding bracket on fuel supply grooves (3) of fuel injector (1).
9. Install injector plunger link on fuel injector (1).
10. Install fuel injector (1) on top stop setting fixture and center over stopnut (2). Using crows foot, tighten stopnut (2) 115 in.-lb (13 N•m).
11. Turn two clamp handles (4) down to release deadweights.
12. Place deadweights switch (5) in LOWER position.
13. Place plunger switch (6) in LOAD position.

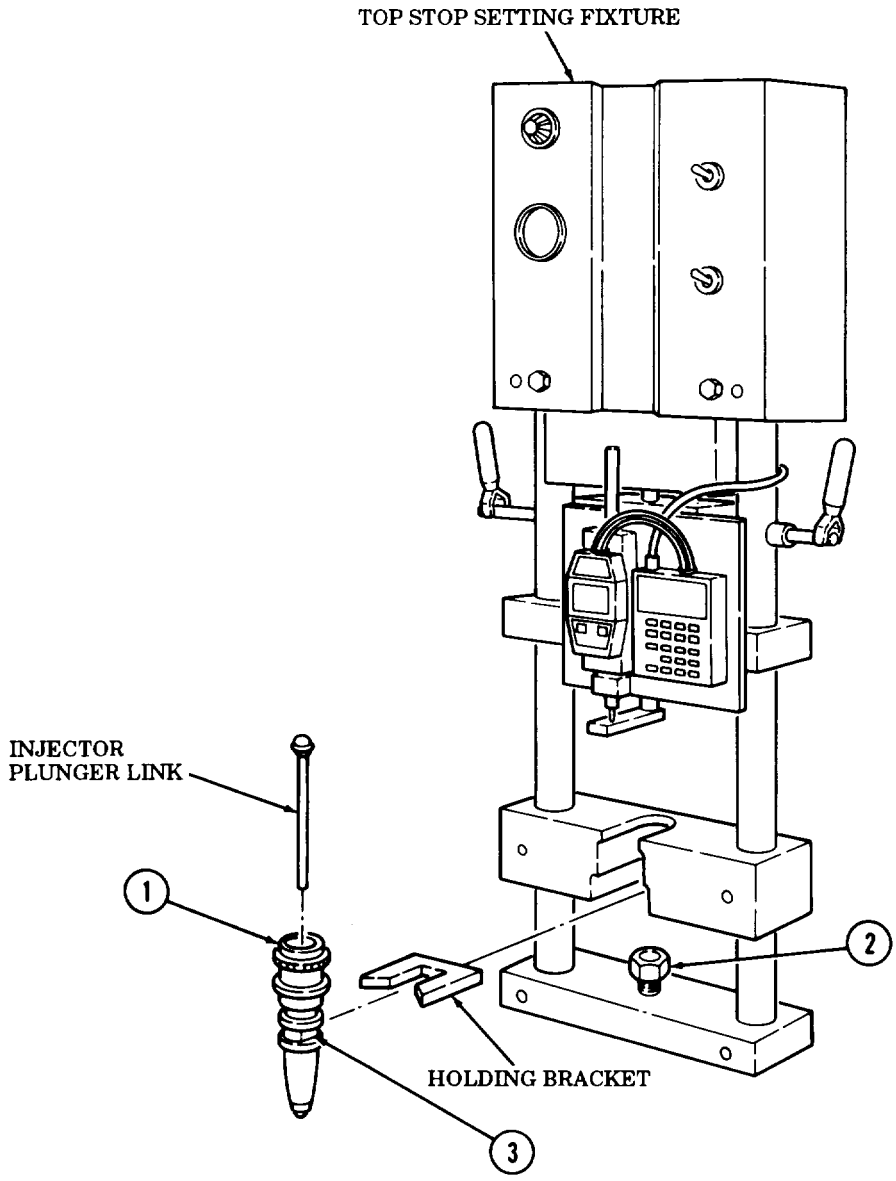

3-84. TOP STOP INJECTOR PLUNGER TRAVEL ADJUSTMENT (Contd)

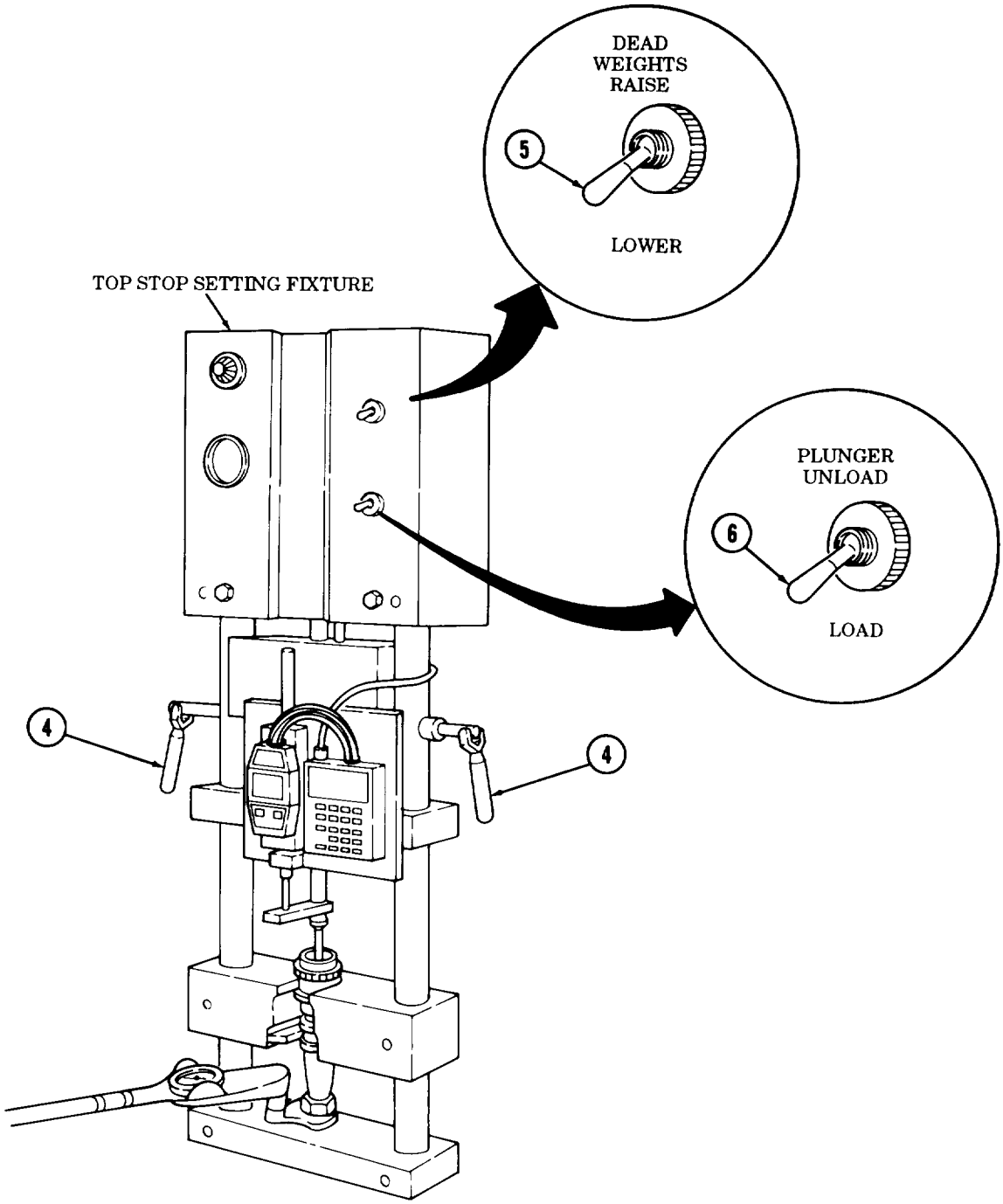

3-84. TOP STOP INJECTOR PLUNGER TRAVEL ADJUSTMENT (Contd)

14. Push "i/m" (inch/millimeter) selector button (2) on digimatic indicator (1) until “in” is displayed.

NOTE

- To use U.S. customary values, the display on the digimatic indicator must display“↓”and ‘in”.
- To use metric values, the display on the digimatic indicator must display “↓” and “mm”.

15. Push direction selector button (3) on digimatic indicator (1) until “↓” is displayed.
16. Press PSET button (4) sand enter the top stop setting fixture preset value using numbered key (6) on digimatic presetter (5). Ensure a “P' is indicated on digimatic indicator.

NOTE

Preset values must be indicated on digimatic indicator before preceding with plunger travel setting or an incorrect reading will be taken for the plunger travel.

17. Press LOAD button (7) and wait 5 seconds or until the digimatic indicator (1) displays preset . readings.

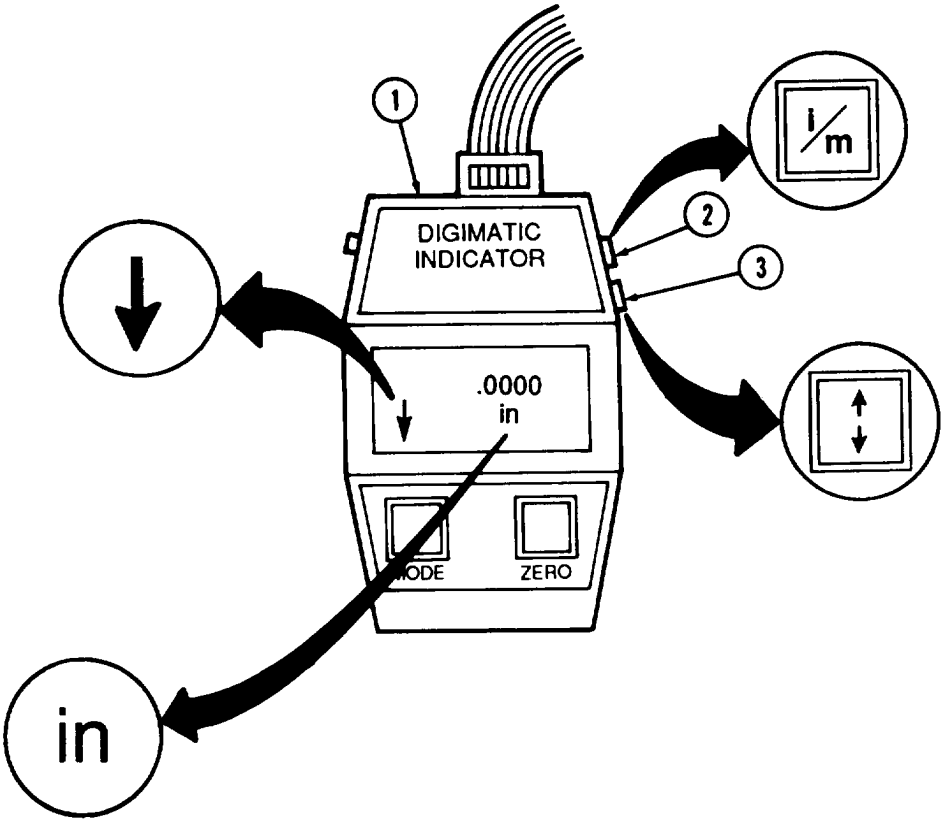

3-84. TOP STOP INJECTOR PLUNGER TRAVEL ADJUSTMENT (Contd)

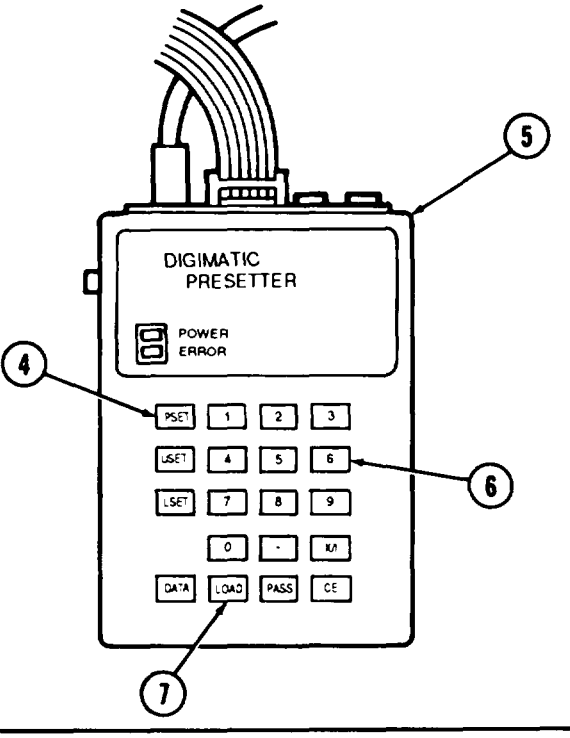

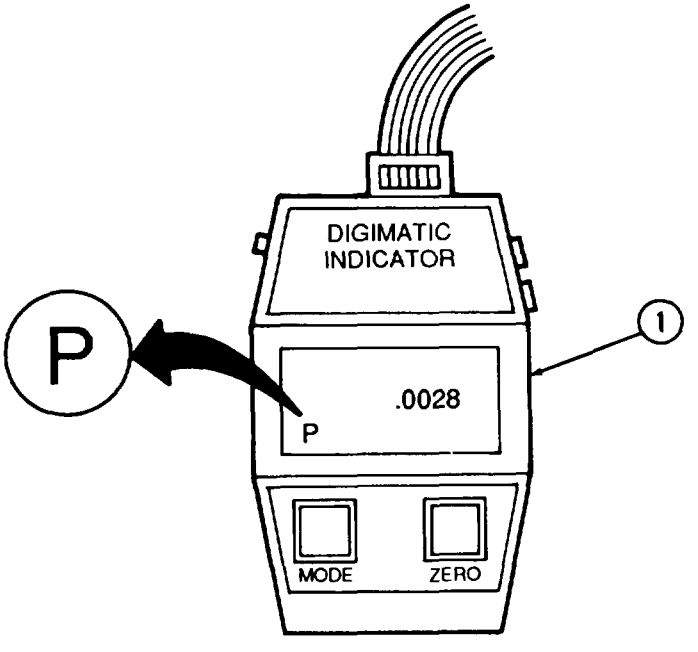

3-84. TOP STOP INJECTOR PLUNGER TRAVEL ADJUSTMENT (Contd)

18. Place plunger switch (3) in UNLOAD position and take plunger travel reading.

NOTE

- The digimatic indicator will display the plunger travel as a negative number.
- When setting the plunger travel, the plunger travel must equal the indicated travel ± 0.0005 in. (± 0.0127 mm).
- For injectors that have been removed from an engine or checked from one top stop to another, the field recheck tolerance is ± 0.0030 in. (± 0.0762 mm) from nominal.
- Perform steps 19 and 20 if plunger travel is incorrect.

19. Using adjusting tool, turn stopscrew (1) on fuel injector (2) until plunger travel reading is correct.
20. Using locknut wrench, tighten injector locknut (4) 55 ft-lb (75 N•m).

NOTE

- Recheck the plunger travel again to ensure it did not change when the top stop injector locknut was torqued.
- Perform steps 21 through 24 for rechecking plunger travel.

21. Place plunger switch (3) in LOAD position.
22. Press the PSET button (7) on the digimatic presetter (5). Ensure a “P” is displayed.
23. Press the LOAD button (6) on the digimatic presetter (5) to display the preset values on the digimatic indicator (8).
24. Place plunger switch”(3) in UNLOAD position and take plunger travel reading. Repeat steps 19 and 20 to adjust stopscrew (1) if plunger travel is incorrect.

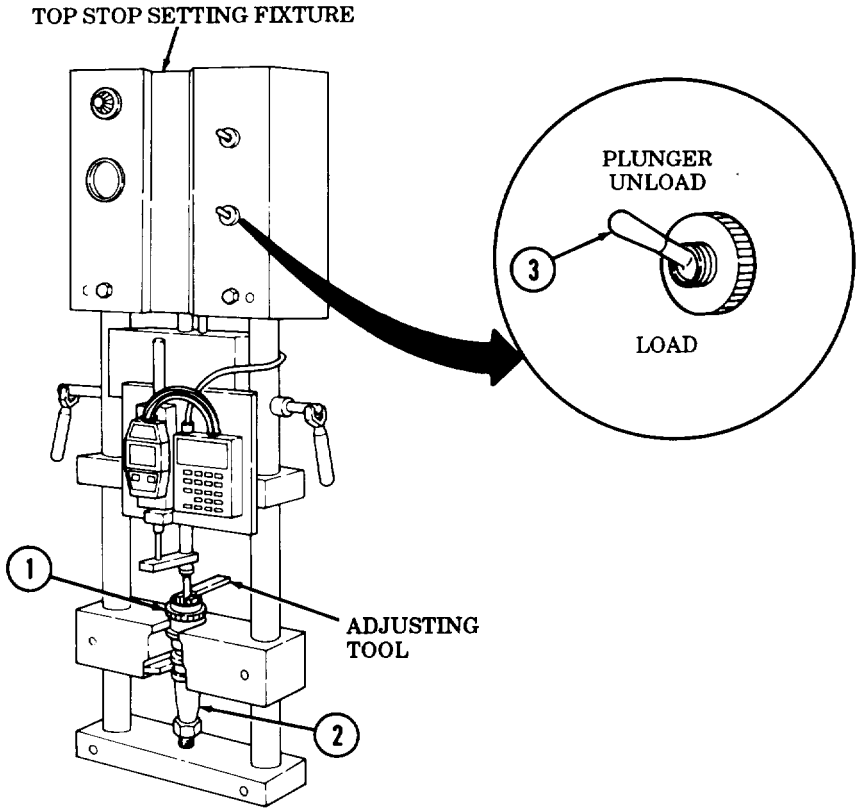

3-84. TOP STOP INJECTOR PLUNGER TRAVEL ADJUSTMENT (Contd)

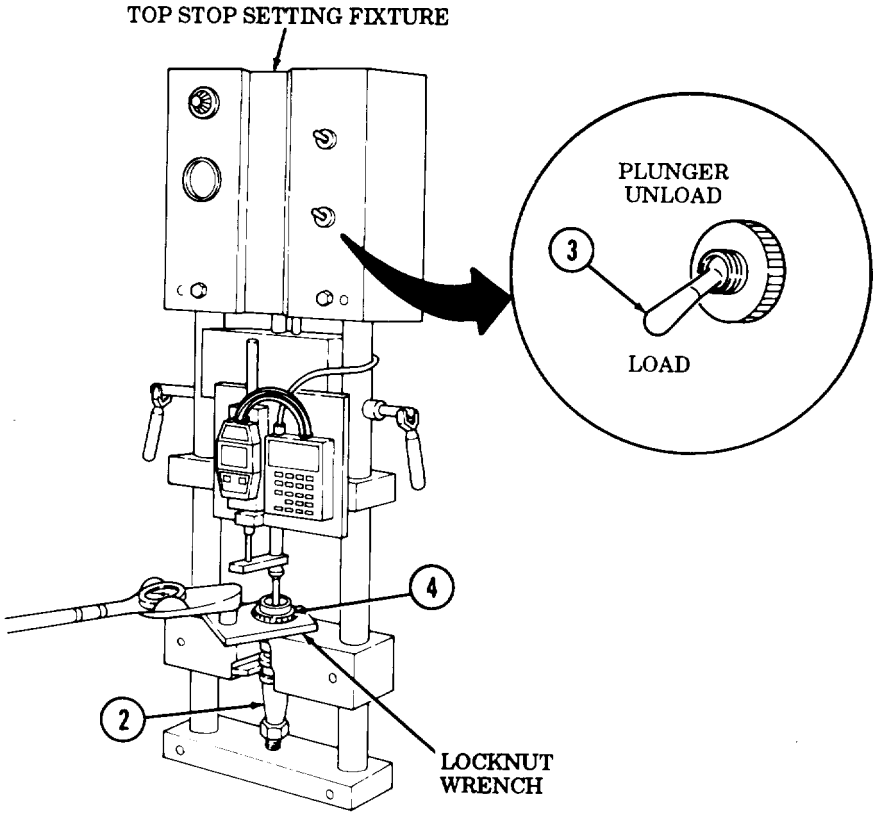

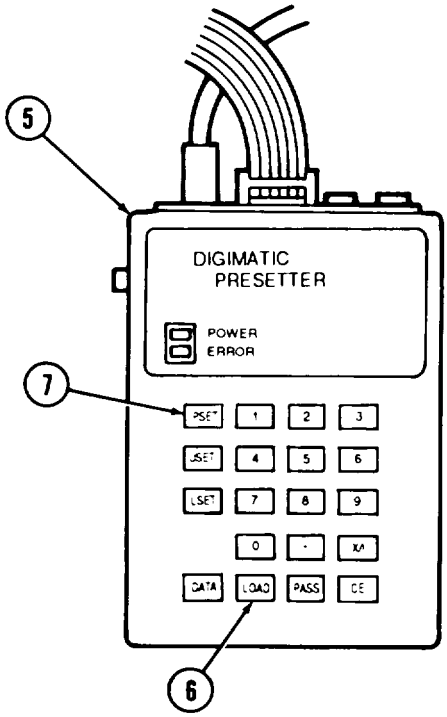

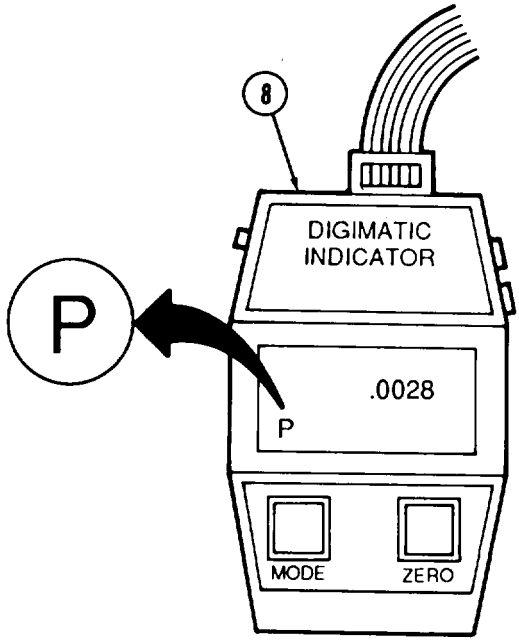

3-84. TOP STOP INJECTOR PLUNGER TRAVEL ADJUSTMENT (Contd)

25. Place deadweights switch (4) in RAISE position.
26. Turn two clamp handles (1) up to raise deadweights.
27. Using crows foot, loosen stopnut (3) and remove fuel injector (2) from top stop setting fixture.
28. Remove holding bracket and injector plunger link from fuel injector (2).

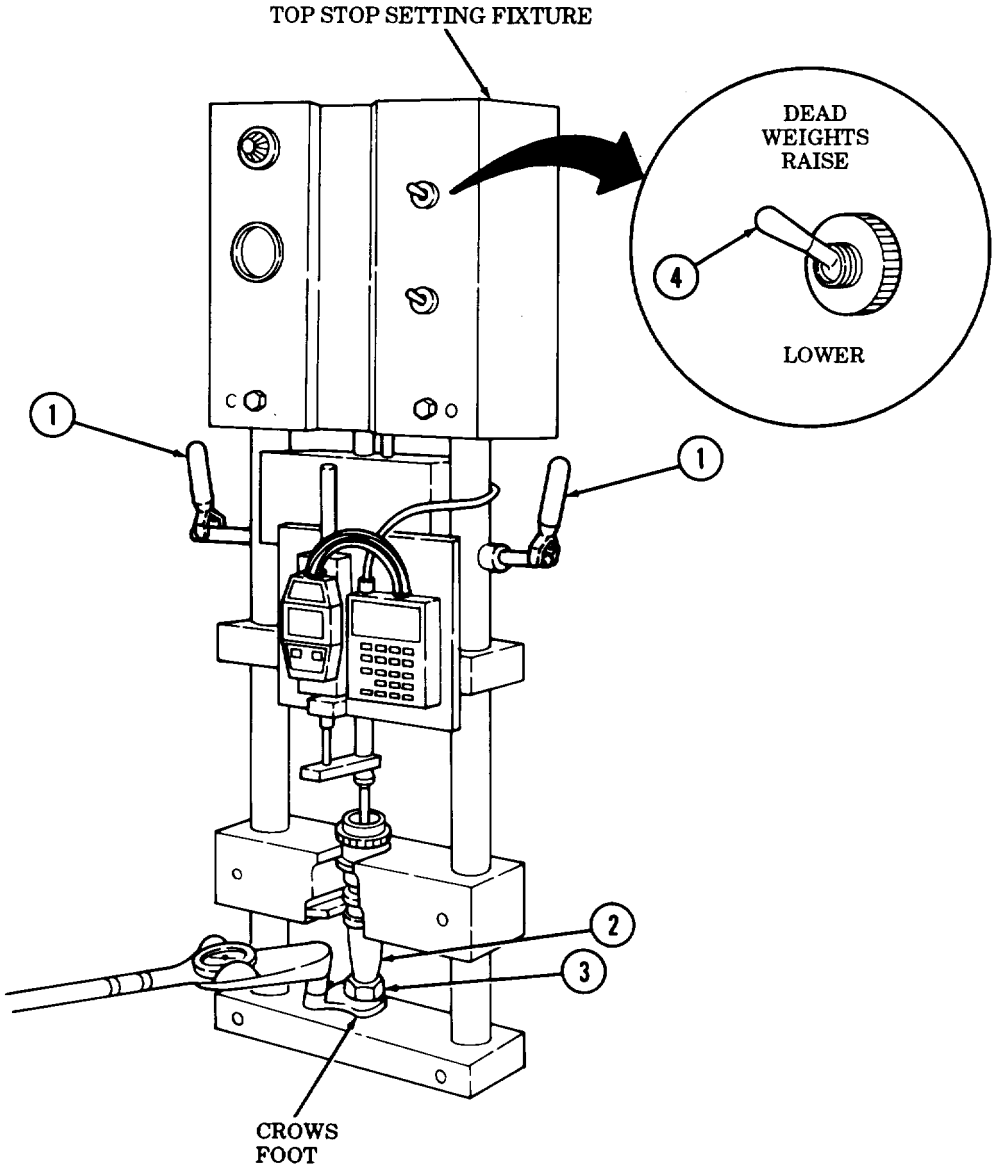

3-84. TOP STOP INJECTOR PLUNGER TRAVEL ADJUSTMENT (Contd)

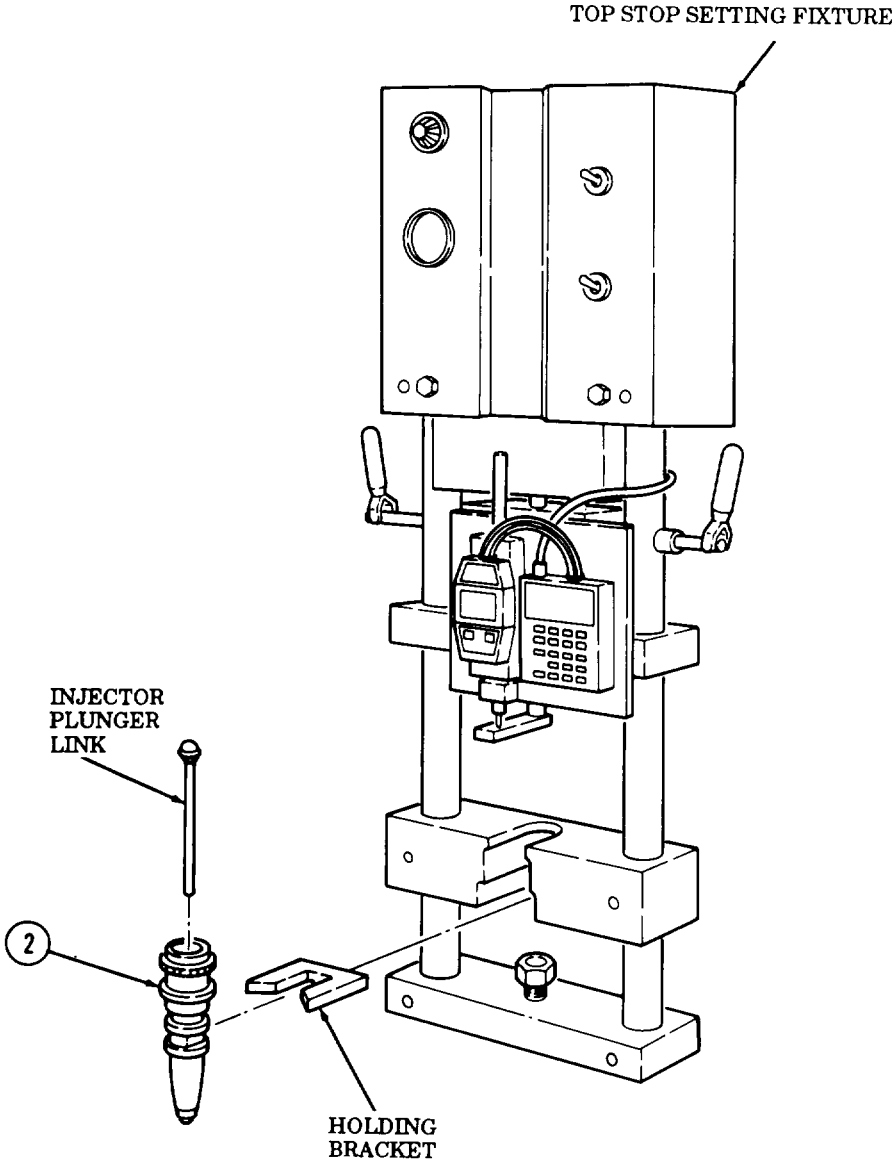

FOLLOW-ON TASK: Install fuel injector (para. 5-6).

CHAPTER 4

CLUTCH MAINTENANCE

4-1. CLUTCH MAINTENANCE INDEX

PARA. NO.	TITLE	PAGE NO.
4-2.	Clutch Maintenance	4-1
4-3.	Release Bearing, Shaft, and Yoke Maintenance	4-4
4-4.	Rotochamber Replacement (M816)	4-6

4-2. CLUTCH MAINTENANCE

THIS TASK COVERS:

a. Removal
b. Cleaning and Inspection
c. Clutch Lever Adjustment
d. Installation

INITIAL SETUP

APPLICABLE MODELS
All

TOOLS
General mechanic's tool kit (Appendix B, Item 1)
Torque wrench, 3/8-in. dr. (Appendix B. Item 4)
Clutch alinement kit (Appendix B, Item 5)

MATERIALS/PARTS
Twelve lockwashers (Appendix D, Item 215)
GAA grease (Appendix C, Item 14)

REFERENCES (TM)
TM 9-214
TM 9-2320-260-10
TM 9-2320-260-34P-1

EQUIPMENT CONDITION
- Parking brake set (TM 9-2320-260-10).
- Transmission removed (para. 8-4).
- Rotochamber removed (M816) (para. 4-4).

4-2. CLUTCH MAINTENANCE (Contd)

a. Removal

1. Loosen twelve screws (4) evenly until spring pressure is released.
2. Remove twelve screws (4), lockwashers (3), pressure plate (2), cover (5), and clutch disc (7) from engine flywheel (1). Discard lockwashers (3).
3. Remove pilot bearing (8) from flywheel bore (9).

b. Cleaning and Inspection

1. For general cleaning instructions, refer to para. 2-8.
2. For general inspection instructions, refer to para. 2-9.
3. Inspect clutch contact face of flywheel (1) for grooves, scuff marks, and discoloration due to overheating. Replace flywheel (1) if damaged (para. 3-21).
4. Inspect clutch disc (7) for warpage of more than 0.004 in. (0.010 cm). Replace if defective.
5. Inspect pilot bearing (8) (TM 9-214). Replace if damaged.
6. Inspect flywheel bore (9) for dirt and metal particles. Remove dirt or metal particles.

c. Clutch Lever Adjustment

1. Lay pressure plate (2) on flat surface and measure distance from outer surface of pressure plate (2) to inner surface (14) of cover (5). Distance should be 1.281 in. (3.25 cm). If distance is not correct, loosen and adjust three screws (13) until distance is correct at all points.
2. Measure distance from top of three levers (12) to inner surface (10) of pressure plate (2). If measurement is not 2.16 in. (5.49 cm), go to step 3.
3. If measurement of step 2 was less than specified, turn three nuts (11) an equal amount to left until correct measurement is obtained. If measurement was more than specified, turn nuts (11) an equal amount to right until correct measurement is obtained.

d. Installation

1. Pack pilot bearing (8) with GAA grease and install in flywheel bore (9).

NOTE

Ensure clutch disc hub and pilot bearing are alined for proper installation of transmission input shaft.

2. Use clutch alinement tool to position clutch disc (7) and pressure plate (2) on flywheel (1) with long end of drive hub (6) away from flywheel (1).
3. Install cover (5) on flywheel (1) with twelve new lockwashers (3) and screws (4). Tighten screws (4) 25-31 lb-ft (34-42 N·m).

4-2. CLUTCH MAINTENANCE (Contd)

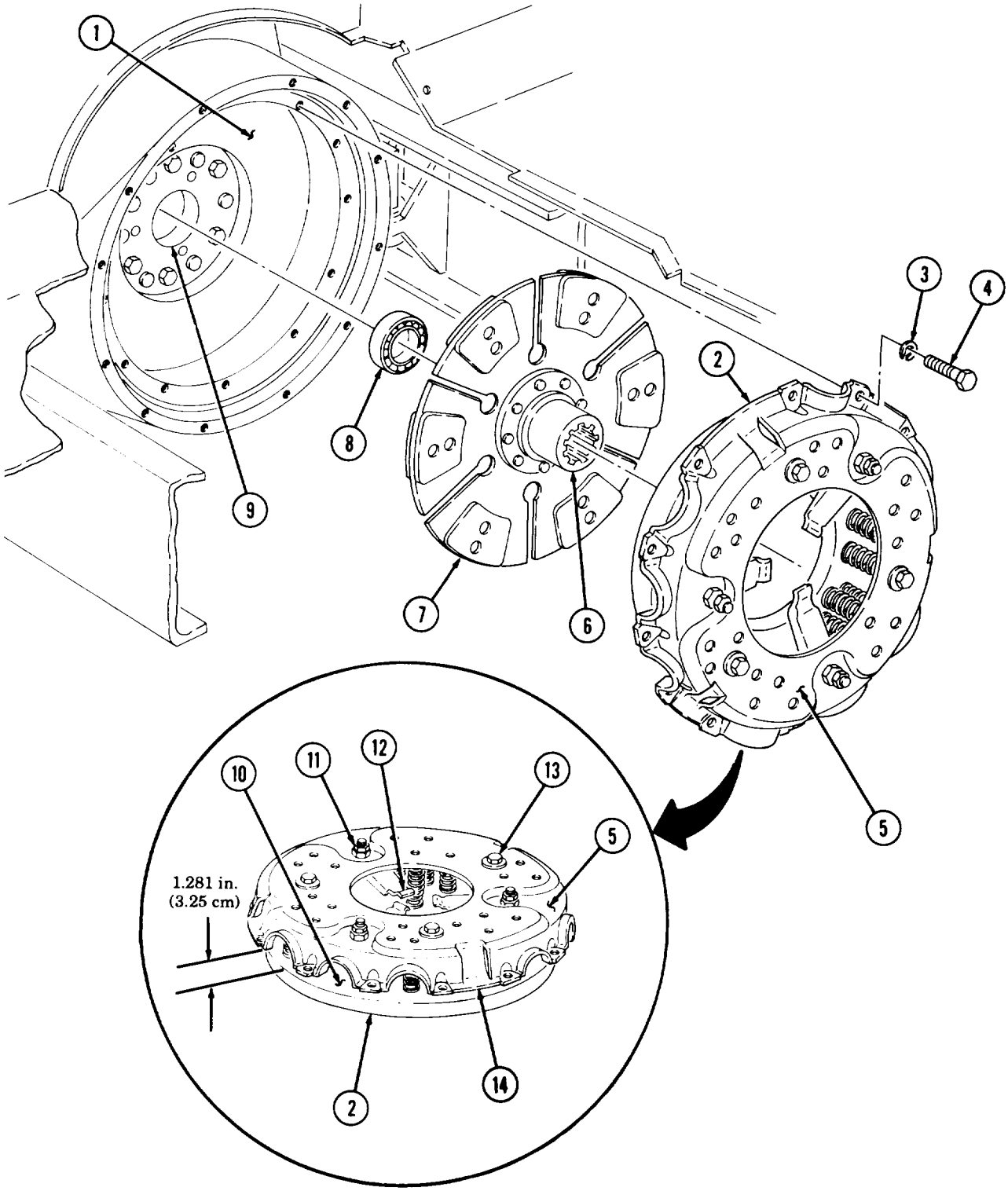

FOLLOW-ON TASKS: • Install rotochamber (M816) (para. 4-4).
• Install transmission (para. 8-4).

4-3. RELEASE BEARING, SHAFT, AND YOKE MAINTENANCE

THIS TASK COVERS:

a. Removal
b. Disassembly
c. Cleaning and Inspection
d. Assembly
e. Installation

INITIAL SETUP

APPLICABLE MODELS
All

TOOLS
General mechanic's tool kit
(Appendix B, Item 1)

MATERIALS/PARTS
Four lockwashers (Appendix D, Item 227)
Two lockwashers (Appendix D, Item 217)
Two seals (Appendix D, Item 420)
Woodruff key (Appendix D, Item 546)

REFERENCES (TM)
TM 9-2320-260-10
TM 9-2320-260-34P-1

EQUIPMENT CONDITION
- Parking brake set (TM 9-2320-260-10).
- Transmission removed (para. 8-4).
- Rotochamber removed (M816) (para. 4-4).

a. Removal

1. Remove nut (11), screw (10), lever (9), and woodruff key (12) from clutch release shaft (13). Discard woodruff key (12).
2. Remove two grease cups (8) and elbows (7) from bell housing (6).
3. Remove two screws (16), lockwashers (15), and washers (14) from yoke (17). Discard lockwashers (15).
4. Remove shaft (13) from yoke (17) and bell housing (6).
5. Remove two seals (4) from bell housing (6). Discard seals (4).
6. Remove yoke (17) and sleeve (18) from input shaft (5).

b. Disassembly

1. Remove four screws (1), lockwashers (2), two clips (3), pads (20), and yoke (17) from sleeve (18). Discard lockwashers (2).
2. Remove thrust bearing (19) from sleeve (18).

c. Cleaning and Inspection

1. For general cleaning instructions, refer to para. 2-8.
2. Inspect sleeve (18) for cracks, breaks, and wear. Replace if damaged.
3. Inspect thrust bearing (19) for scoring, pitting, and looseness. Replace if damaged.
4. Inspect yoke (17) for cracks and breaks. Replace if damaged.

d. Assembly

1. Install thrust bearing (19) on sleeve (18).
2. Install yoke (17) on sleeve (18) with two pads (20), clips (3), four new lockwashers (2), and screws (1).

4-3. RELEASE BEARING, SHAFT, AND YOKE MAINTENANCE (Contd)

e. Installation

1. Position two new seals (4) in bell housing (6).
2. Position sleeve (18) on input shaft (5).
3. Slide clutch release shaft (13) through bell housing (6) and yoke (17).
4. Install two washers (14), new lockwashers (15), and screws (16) on yoke (17).
5. Install two elbows (7) and grease cups (8) on bell housing (6).
6. Install new woodruff key (12) and lever (9) on clutch release shaft (13) with screw (10) and nut (11).

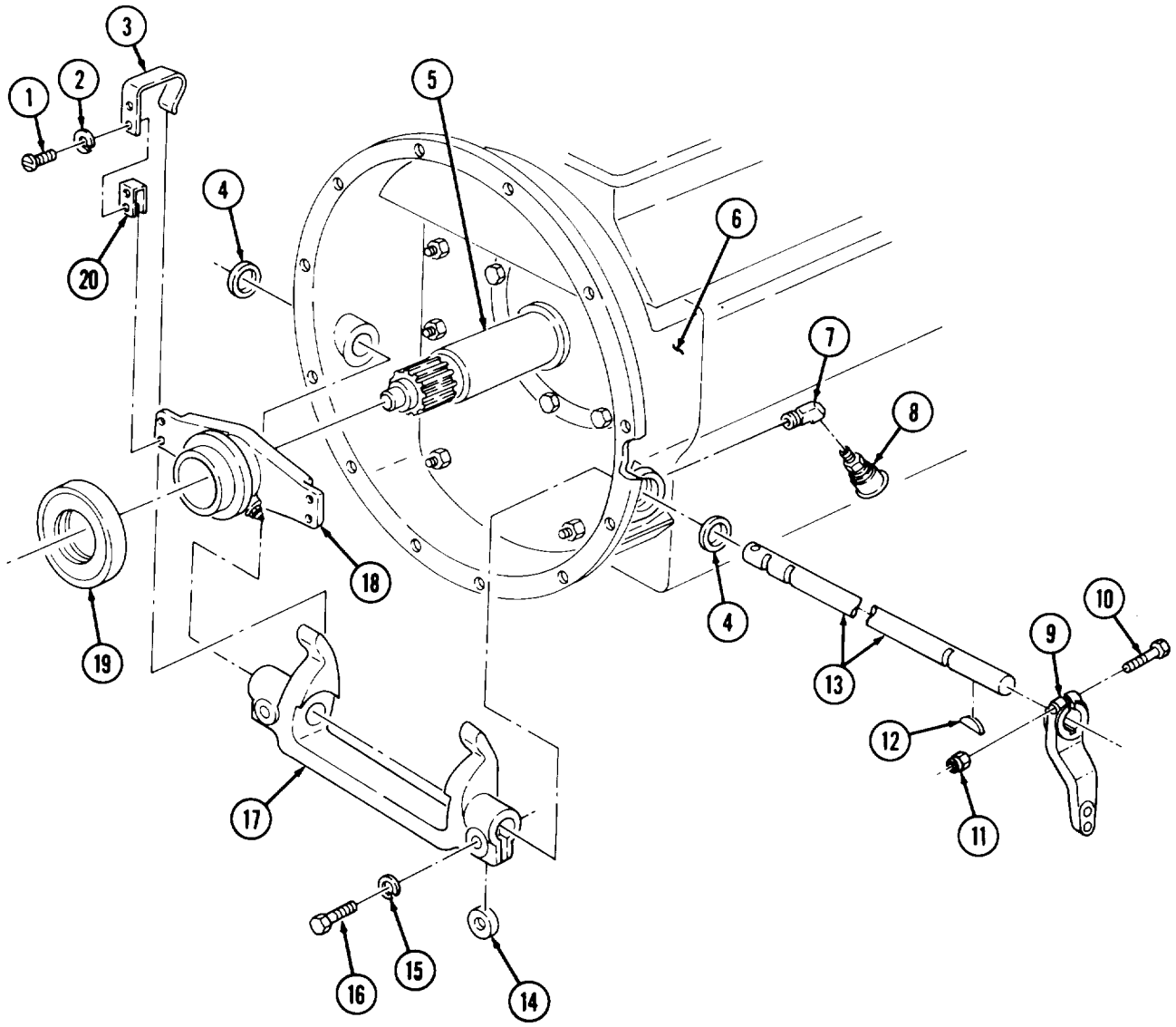

FOLLOW-ON TASKS: • Install rotochamber (M816) (para. 4-4).
• Install transmission (para. 8-4).

4-4. ROTOCHAMBER REPLACEMENT(M816)

THIS TASK COVERS:

a. Removal
b. Installation
c. Adjustment

INITIAL SETUP

APPLICABLE MODELS
M816

TOOLS
General mechanic's tool kit
(Appendix B, Item 1)

MATERIALS/PARTS
Locknut (Appendix D, Item 167)
Two lockwashers (Appendix D, Item 217)
Two lockwashers (Appendix D, Item 229)

MATERIALS/PARTS (Contd)
Cotter pin (Appendix D, Item 21)
Woodruff key (Appendix D, Item 546)
Cotter pin (Appendix D, Item 19)

REFERENCES (TM)
TM 9-2320-260-20
TM 9-2320-260-34P-1

EQUIPMENT CONDITION
Cab tunnel covers removed (TM 9-2320-260-20).

a. Removal

1. Disconnect air line (21) from rotochamber (10).
2. Remove two nuts (5) and lockwashers (4) from two studs (9). Discard lockwashers (4).
3. Remove cotter pin (8) and pin (6) from clevis (7). Discard cotter pin (8).
4. Remove rotochamber (10) from lever (15) and bracket (1).
5. Remove two screws (3), lockwashers (2), and bracket (1) from transmission (22). Discard lockwashers (2).
6. Remove cotter pin (19), washer (18), and lever (15) from shaft (12). Discard cotter pin (19).
7. Remove locknut (14) and screw (20) from lever (13). Discard locknut (14).
8. Remove lever (13) and woodruff key (11) from shaft (12). Discard woodruff key (11).

b. Installation

1. Install new woodruff key (11) and lever (13) on shaft (12) with screw (20) and new locknut (14).
2. Install lever (15) on shaft (12) with washer (18) and new cotter pin (19).
3. Install bracket (1) on transmission (22) with two new lockwashers (2) and screws (3).
4. Position studs (9) of rotochamber (10) through bracket (1) and install with two new lockwashers (4) and nuts (5).
5. Connect lever (15) to clevis (7) with pin (6) and new cotter pin (8).
6. Connect air line (21) to rotochamber (10).

c. Adjustment

NOTE

Assistant is required for adjustment.

1. With clutch pedal depressed, jamnut (17) loosened, and setscrew (16) in retracted position, apply air pressure to rotochamber (10).
2. Adjust setscrew (16) to 0.094-0.250 in. (0.239-0.635 cm) clearance from lever (13) and tighten jamnut (17).
3. Release clutch pedal and air pressure.

4-4. ROTOCHAMBER REPLACEMENT (M816) (Contd)

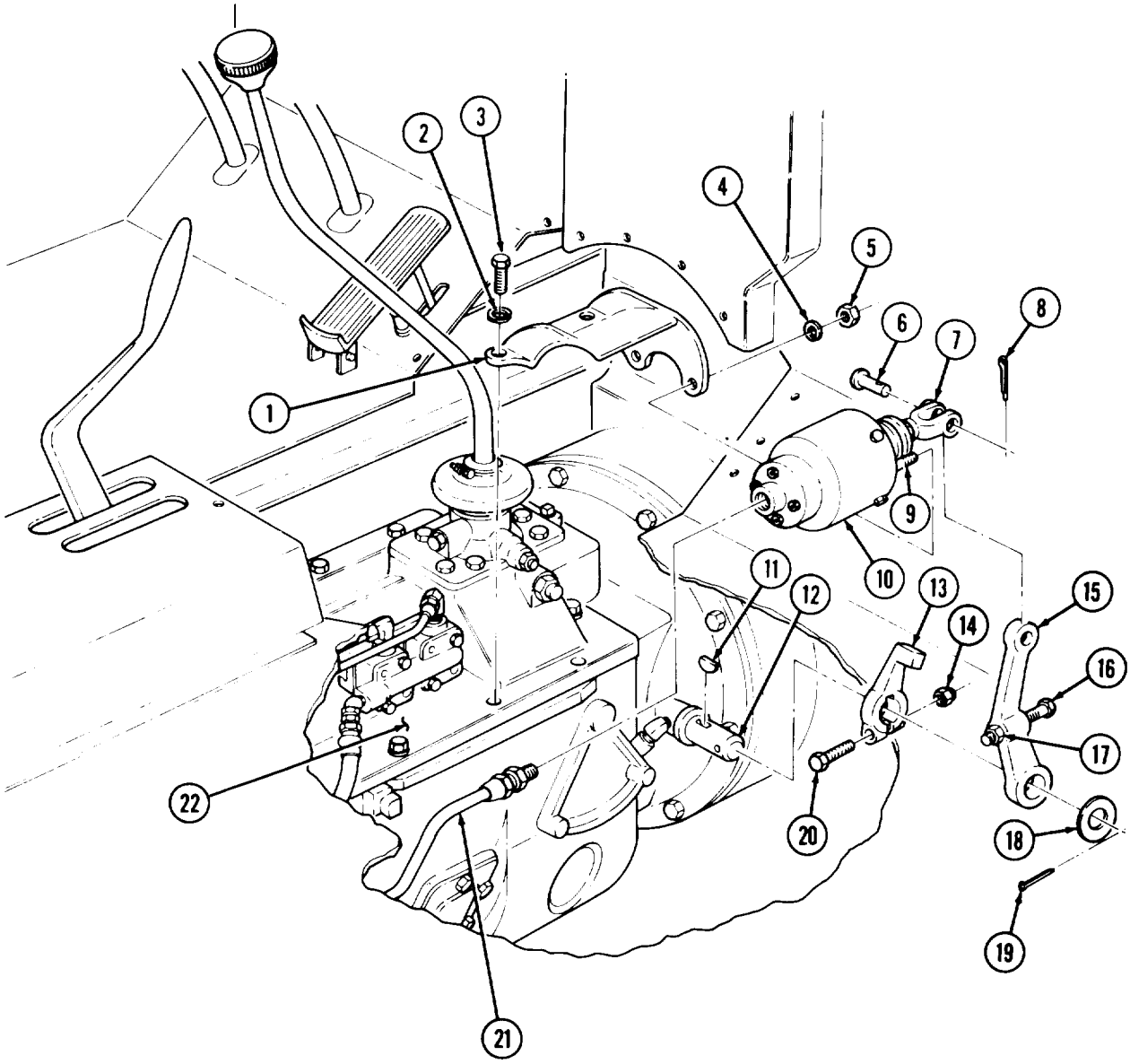

FOLLOW-ON TASK: Install cab tunnel covers (TM 9-2320-260-20).

CHAPTER 5

FUEL SYSTEM MAINTENANCE

Section I. Description and Data (page 5-1)
Section II. Fuel Injector Maintenance (page 5-3)
Section III. Fuel Pump Maintenance (page 5-37)

Section I. DESCRIPTION AND DATA

5-1. FUEL SYSTEM MAINTENANCE INDEX

PARA. NO.	TITLE	PAGE NO.
5-2.	Description	5-1
5-3.	Data	5-2
5-4.	Fuel Tank Repair	5-2

5-2. DESCRIPTION

The M809 series vehicles use standard or variable speed pressure time (PT) air fuel controlled (AFC) plugged, type G fuel pumps. The variable speed (VS) fuel pump is used on the M816 and M819 models. These models require greater varying engine speed to operate the crane. This is accomplished by an additional governor located in the upper portion of the fuel pump housing.

All engines used in the M809 series vehicles contain six pressure time (PT) type D fuel injectors. The injectors receive fuel from the fuel pump and meter, and inject fuel into the combustion chamber. There are two types of injectors being used in these models: a standard cylindrical PT (type-D) and cylindrical PT (type-D) top stop injector. The standard injector was used prior to serial number 11246663, and after serial number 11246663 the top stop injector was used.

5-3. DATA

1. FUEL PUMP STANDARD AND VARIABLE SPEED

Make	Cummins
Model	PT, AFC plugged
Code (standard)	3892
Type	G
Location	Left side of engine

2. FUEL INJECTOR

Make	Cummins
Model	PT
Type (early and late model)	D
Number of cupholes	8
Size of cupholes	0.007 in. (0.1778 mm)
Degree of cupholes	17 degrees
Orifice size	0.018-0.019 in. (0.46-0.48 mm)
Number of injectors	6
Location	Under rocker arm cover, two per cylinder head

5-4. FUEL TANK REPAIR

Fuel tank repair, which requires special safety precautions, is not covered in this manual. Refer to TM 9-237, Welding Theory and Application, for repair procedures.

Section II. FUEL INJECTOR MAINTENANCE

5-5. FUEL INJECTOR MAINTENANCE INDEX

PARA. NO.	TITLE	PAGE NO.
5-6.	Fuel Injector Replacement	5-4
5-7.	Fuel Injector (Non-Top Stop) Maintenance	5-6
5-8.	Fuel Injector (Top Stop) Maintenance	5-13
5-9.	Injector Leakage Test	5-19
5-10.	Pattern Test	5-25
5-11.	Flow Test	5-28

5-6. FUEL INJECTOR REPLACEMENT

THIS TASK COVERS:

a. Removal b. Installation

INITIAL SETUP

APPLICABLE MODELS
All

TOOLS
General mechanic's tool kit (Appendix B, Item 1)
Torque wrench, 3/8-in. dr. (Appendix B, Item 4)
Injector puller (for top stop injectors) (Appendix B, Item 109)
Injector puller (for non-top stop injectors) (Appendix B, Item 108)

MATERIALS/PARTS
Lubricating oil (Appendix C, Item 21)

REFERENCES (TM)
TM 9-2320-260-10
TM 9-2320-260-34P-1

EQUIPMENT CONDITION
- Parking brake set (TM 9-2320-260-10).
- Valve crossheads removed (para. 3-16).

a. Removal

1. Remove link (1) from injector (6).

CAUTION

- Do not turn injector upside down after removal. Plunger will fall out and be damaged.
- Do not damage injector tip during handling. Ensure injectors and plungers are not intermixed. Always number injectors according to the cylinder head from which they were removed. Failure to do so may cause damage to injectors.

NOTE

- Perform step 2 for removing non-top stop injectors found on early model engines.
- Perform step 3 for removing top stop injectors found on late model engines.

2. Remove two screws (2), retaining clamp (3), washer (9), and injector (6) from cylinder head (4) and injector bore (5).
3. Remove two screws (2), retaining clamp (3), and injector (6) from cylinder head (4) and injector bore (5).

b. Installation

CAUTION

Ensure no foreign objects have fallen into cylinder head through injector bore. Failure to do so may cause damage to engine.

NOTE

- If injector condition is unknown, or has been disassembled, it must be calibrated before installation (para. 5-7 or 5-8).
- When positioning injector in injector bore, ensure screen on fuel inlet hole is alined with exhaust side of cylinder head.

1. Lubricate three injector O-rings (7) and position injector (6) in injector bore (5).

5-6. FUEL INJECTOR REPLACEMENT (Contd)

NOTE

Use injector puller, P/N 3376000, for non-top stop injectors. Use injector puller, P/N 3375161, for top stop injectors.

2. Using injector puller, seat injector (6) in injector bore (5). A click will be heard when injector (6) seats properly.

NOTE

- Perform step 3 for installing top stop injectors found on late model engines.
- Perform step 4 for installing non-tap stop injectors found on early model engines.

3. Install retaining clamp (3) on cylinder head (4) with two screws (2). Do not tighten screws (2).
4. Install washer (9) and retaining clamp (3) on cylinder head (4) with two screws (2). Do not tighten screws (2).
5. Insert injector link (1) in injector plunger (8). Tighten two screws (2) 11-12 lb-ft (15-16 NŽm) in 4 lb-ft (5 NŽm) steps.
6. Raise injector link (1) and allow injector link (1) to fall back into injector plunger (8). If injector link (1) bonds or sticks, loosen two screws (2) and retighten.

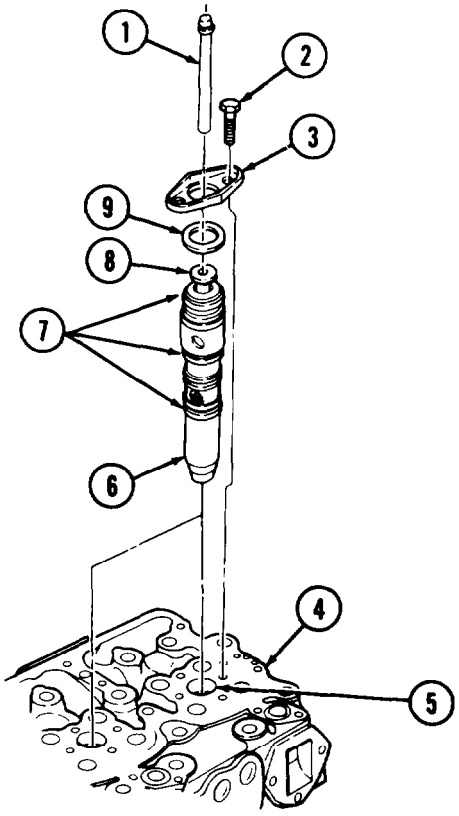

FOLLOW-ON TASK: Install valve crossheads (para. 3-16).

5-7. FUEL INJECTOR (NON-TOP STOP) MAINTENANCE

THIS TASK COVERS:

a. Disassembly
b. Cleaning and Inspection
c. Assembly

INITIAL SETUP

APPLICABLE MODELS
All

TOOLS
General mechanic's tool kit (Appendix B, Item 1)
Vise (Appendix B, Item 38)
Torque wrench, 1/2-in. dr. (Appendix B, Item 3)
Loading fixture
Cup retainer wrench (Appendix B, Item 21)
Injector body wrench (Appendix B, Item 23)

MATERIALS/PARTS
Injector overhaul repair kit (Appendix D, Item 336)

MATERIALS/PARTS (Contd)
Drycleaning solvent (Appendix C, Item 48)
Cleaning cloth (Appendix C, Item 9)
Diesel fuel (Appendix C, Item 13)

REFERENCES (TM)
TM 9-2320-260-10
TM 9-2320-260-34P-1

EQUIPMENT CONDITION
- Parking brake set (TM 9-2320-260-10).
- Fuel injectors removed (para. 5-6).

GENERAL SAFETY INSTRUCTIONS
Keep fire extinguisher nearby when using drycleaning solvent.

a. Disassembly

WARNING

Drycleaning solvent is flammable and will not be used near open flame. Use only in well-ventilated places. Failure to do this may result in injury to personnel.

CAUTION

Improper cleaning methods and use of unauthorized cleaning solvents can damage equipment.

1. Clean exterior of injector (1) with drycleaning solvent.

CAUTION

Injector barrel and plunger are a matched pair (class fit). Do not interchange. Do not touch internal parts unless hands are moistened with diesel fuel. Failure to do this may result in damage to equipment.

2. Remove plunger (2) and spring (3) from injector (1).
3. Install injector body wrench in vise.
4. Install injector (1) into body wrench so flat machined areas on injector (1) are secure in body wrench.
5. Using cup retainer wrench, loosen cup retainer (4).
6. Remove injector (1) from body wrench.

NOTE

Position injector so cup retainer is in an upward position. This will prevent cup, barrel, and check ball from falling out of injector.

7. Remove cup retainer (4) from adapter (7).
8. Remove injector cup (5) from barrel (6). Discard injector cup (5).

5-7. FUEL INJECTOR (NON-TOP STOP) MAINTENANCE (Contd)

9. Hold injector barrel (9) and adapter (7) together and set upright on a clean cloth. While holding barrel (9), lift adapter (7) straight up.
10. Tilt injector barrel (9) into hand until check ball (8) falls out. Discard check ball (8).

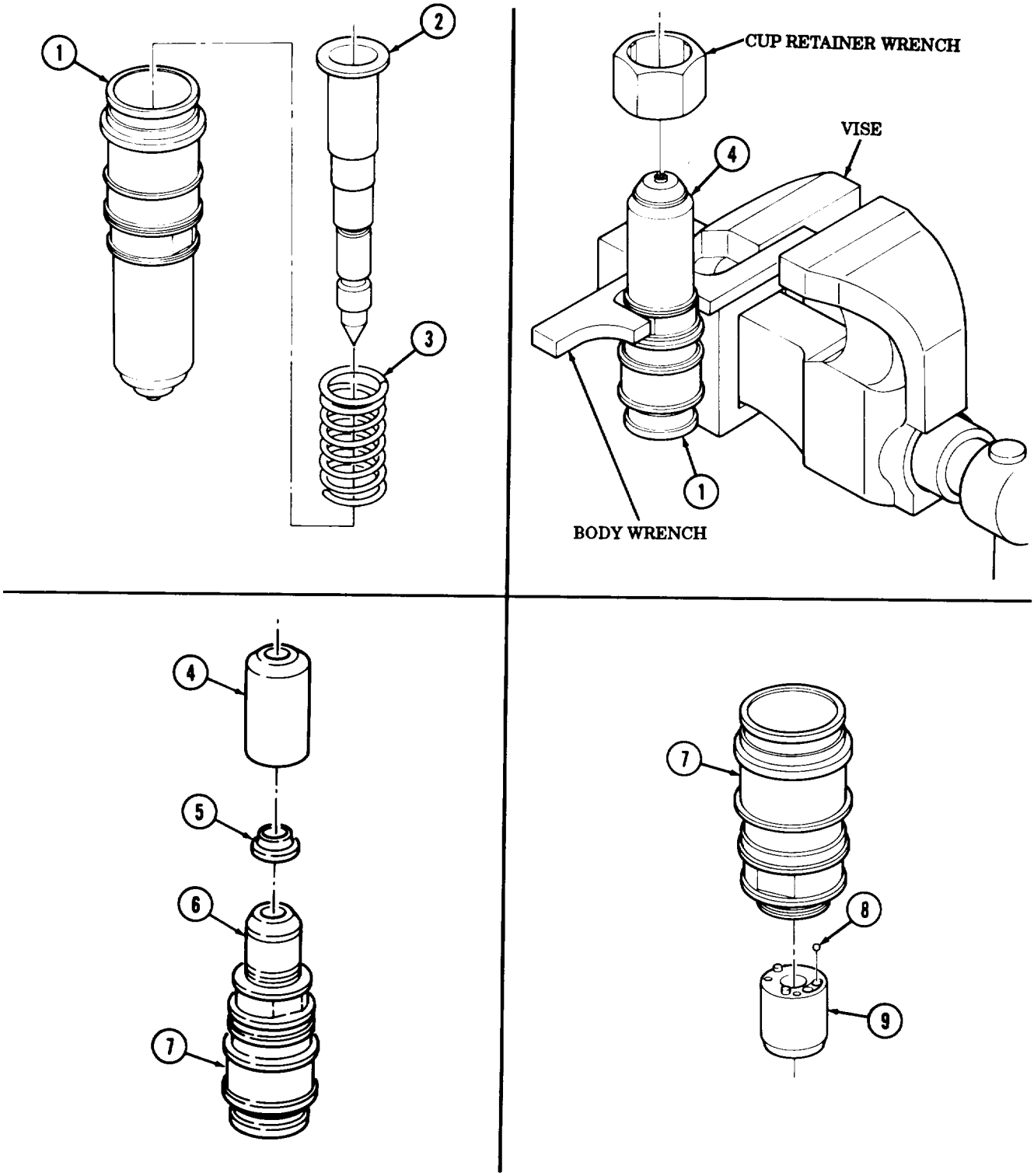

5-7. FUEL INJECTOR (NON-TOP STOP) MAINTENANCE (Contd)

11. Remove three O-rings (2) from adapter (1). Discard O-rings (2).
12. Remove retaining ring (3) and fuel screen (4) from adapter (1). Discard retaining ring (3) and fuel screen (4).

b. Cleaning and Inspection

NOTE

Bright spots or surface wear patterns at top of plunger machined area, on opposite side at bottom or midpoint, are normal results of rocker lever action.

1. For general cleaning instructions, refer to para. 2-8.
2. Inspect plunger (5), barrel (7), and check ball seat (6) for nicks, burrs, cracks, or excessive wear. Replace part(s) if damaged.
3. Inspect spring (8) for excessive wear and damage. Replace spring (8) if damaged.
4. Inspect threads (9) on cup retainer (10) for damage. Replace cup retainer (10) if damaged.
5. Inspect inside and outside cone area of cup retainer (10) for nicks and burrs. Replace cup retainer (10) if damaged.

5-7. FUEL INJECTOR (NON-TOP STOP) MAINTENANCE (Contd)

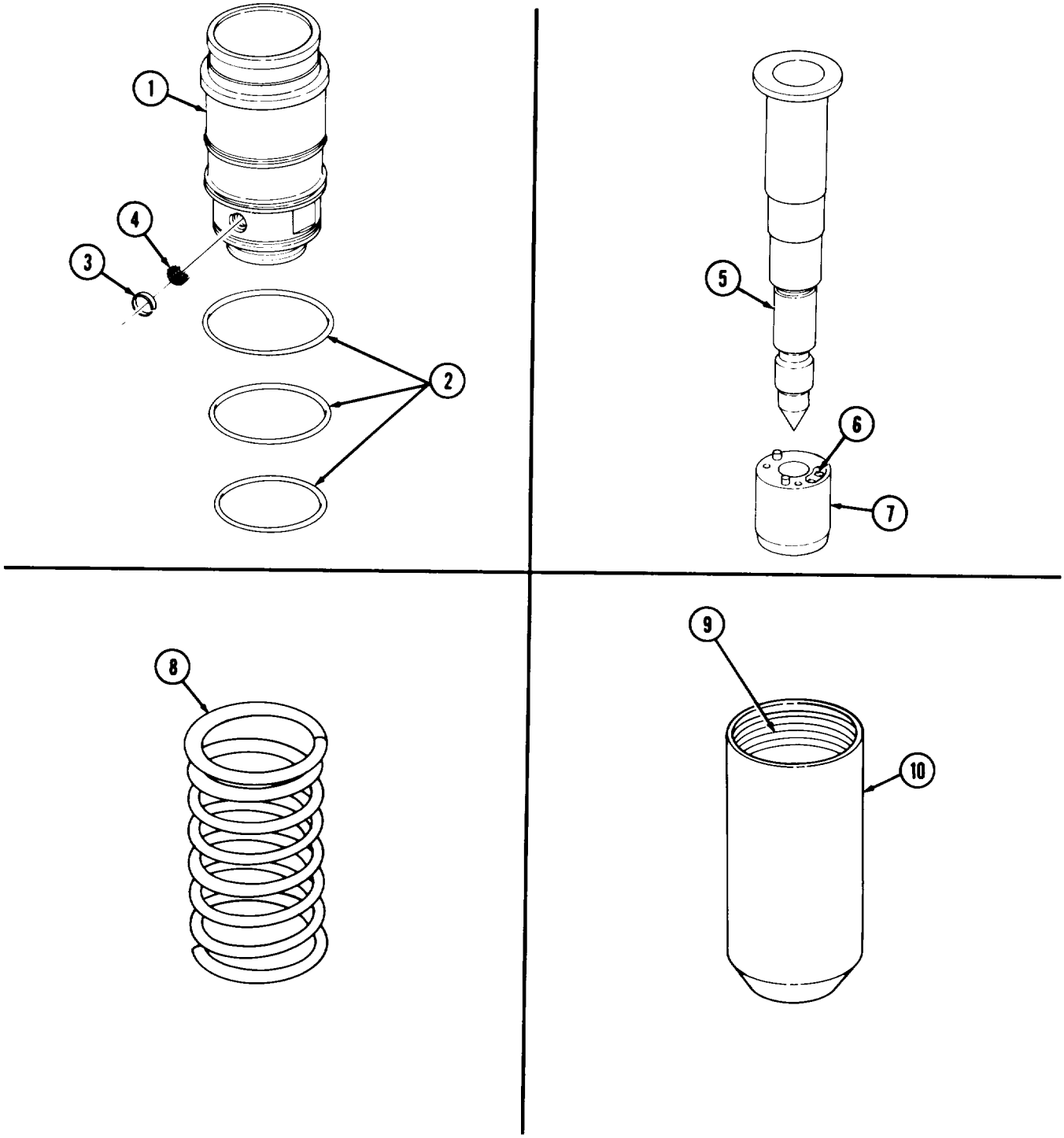

5-7. FUEL INJECTOR (NON-TOP STOP) MAINTENANCE (Contd)

c. Assembly

CAUTION

Lubricate parts with clean diesel fuel before assembly. Do not use lubricating oil. Oil can crystallize under excessive heat, causing damage to injector.

1. Place new check ball (3) in barrel (4).
2. Place adapter (2) on barrel (4).
3. Soak injector plunger (1) in clean diesel fuel and install in adapter (2).
4. Turn adapter (2) and barrel (4) upright on clean cloth and place new injector cup (6) on barrel (4).
5. Position cup retainer (5) on adapter (2). Finger tighten cup retainer (5), then back off 1/4 turn.
6. Insert injector (7) into loading fixture.
7. Slide body wrench over flats on adapter (2).
8. Place cup retainer wrench over cup retainer (5).
9. Turn loading fixture stud down until injector (7) is secure.
10. Tighten loading fixture stud 110 lb-in. (12.4 N•m).
11. Using cup retainer wrench, tighten cup retainer (5) 50 lb-ft (68 N•m).

CAUTION

When removing injector from loading fixture be careful plunger does not fall out. Damage to plunger may result.

12. Remove loading fixture stud from fixture and remove injector (7).

5-7. FUEL INJECTOR (NON-TOP STOP) MAINTENANCE (Contd)

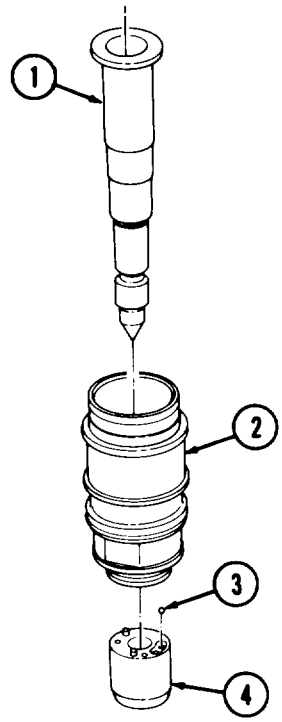

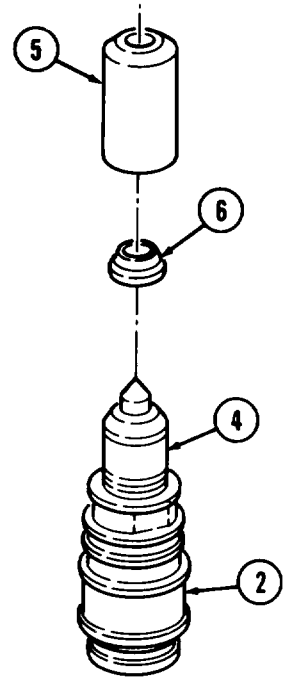

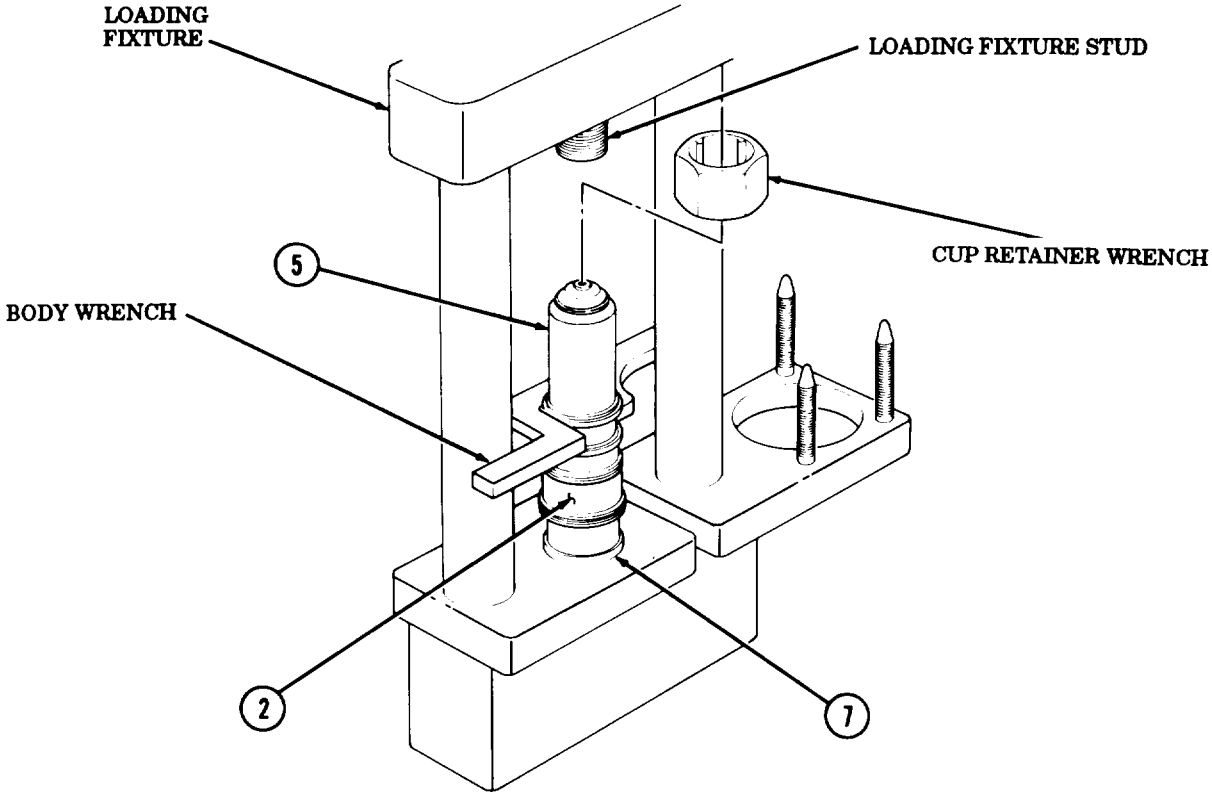

5-7. FUEL INJECTOR (NON-TOP STOP) MAINTENANCE (Contd)

NOTE

Steps 13 through 15 are used to check cup retainer to plunger alinement.

13. Remove plunger (2) from injector (1). Apply a light coat of diesel fuel on plunger (2) and insert plunger (2) in injector (1).
14. Using palm of hand, press plunger (2) into cup retainer (5) and rotate 90°.
15. Turn over injector (1) so cup retainer (5) faces up. Plunger (2) should slide out of injector (1) immediately.

NOTE

If plunger does not slide out of injector immediately, injector must be disassembled and assembled again to improve alinement.

16. Install three new O-rings (4) on injector (1).
17. Install new fuel screen (7) on injector (1) with new retaining ring (6).
18. Position spring (3) on plunger (2) and position plunger (2) and spring (3) in injector (1).

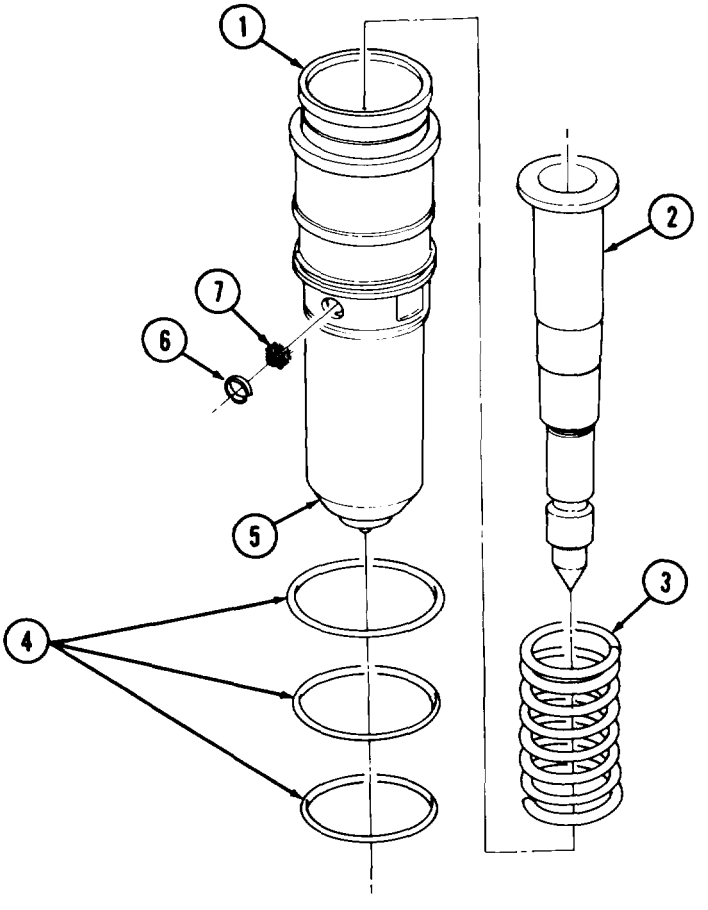

FOLLOW-ON TASKS: • Calibrate fuel injector (para. 5-9).
• Install fuel injector (para. 5-6).

5-8. FUEL INJECTOR (TOP STOP) MAINTENANCE

THIS TASK COVERS:

a. Disassembly
b. Cleaning and Inspection
c. Assembly

INITIAL SETUP

APPLICABLE MODELS
All

TOOLS
General mechanic's tool kit (Appendix B, Item 1)
Vise (Appendix B, Item 38)
Cup retainer wrench (Appendix B, Item 21)
Injector body wrench (Appendix B, Item 23)
Adjusting wrench (Appendix B, Item 154)
Locknut wrench (Appendix B, Item 25)
Torque wrench, 1/2-in. dr. (Appendix B, Item 3)
Loading fixture

MATERIALS/PARTS
Injector overhaul repair kit (Appendix D, Item 336)

MATERIALS/PARTS (Contd)
Drycleaning solvent (Appendix C, Item 48)
Cleaning cloth (Appendix C, Item 9)
Diesel fuel (Appendix C, Item 13)

REFERENCES (TM)
TM 9-2320-260-10
TM 9-2320-260-34P-1

EQUIPMENT CONDITION
- Parking brake set (TM 9-2320-260-10).
- Fuel injectors removed (para. 5-6).

GENERAL SAFETY INSTRUCTIONS
Keep fire extinguisher nearby when using drycleaning solvent.

a. Disassembly

WARNING

Drycleaning solvent is flammable and will not be used near open flame. Use only in well-ventilated areas. Failure to do this may result in injury to personnel.

CAUTION

Improper cleaning methods and use of unauthorized cleaning solvents can damage equipment.

1. Clean exterior of injector (1) with drycleaning solvent.

CAUTION

Injector barrel and plunger are a matched pair (class fit). Do not interchange. Do not touch internal parts unless hands are clean and moistened with diesel fuel. Failure to do this may result in damage to equipment.

2. Install body wrench in vise.
3. Slide flat machined areas in fuel supply groove of injector (6) into body wrench.

5-8. FUEL INJECTOR (TOP STOP) MAINTENANCE (Contd)

4. Position locknut wrench on top of locknut (4) and loosen locknut (4).
5. Position adjusting wrench on adjusting screw (3) and loosen.
6. Remove adjusting screw (3) and locknut (4) from injector (6).
7. Remove plunger (2) from injector (6).
8. Remove spring retainer (1) and plunger spring (7) from injector (6).
9. Using cup retainer wrench, loosen cup retainer (5).
10. Remove injector (6) and body wrench from vise.

NOTE

Place injector on a flat surface so cup retainer is facing up. This will prevent cup, barrel, and check ball from falling off injector.

11. Remove cup retainer (5) from adapter (9).
12. Remove injector cup (8) from adapter (9). Discard injector cup (8).
13. Hold injector barrel (13) and adapter (9) together and set upright on a clean cloth. While holding injector barrel (13), lift adapter (9) straight up.
14. Tilt injector barrel (13) over until check ball (11) falls out. Discard check ball (11).
15. Remove three O-rings (14) from adapter (9). Discard O-rings (14).
16. Remove retaining ring (16) and screen (15) from adapter (9). Discard retaining ring (16) and screen (15).

b. Cleaning and Inspection

NOTE

Bright spots or surface wear patterns at top of plunger machined area, on opposite side at bottom or midpoint, are normal results of rocker lever action.

1. For general cleaning instructions, refer to para. 2-8.
2. Inspect plunger (2), spring (7), and check ball seat (12) for cracks, breaks, nicks, burrs, excessive wear, or collapsed coils. Replace part(s) if damaged.
3. Inspect spring retainer (1) for cracks, breaks, or heavy wear. Replace spring retainer (1) if cracked, broken, or worn.
4. Inspect injector barrel (13) for wear or cracks. Replace both injector barrel (13) and plunger (2) if worn or cracked.
5. Inspect cup retainer threads (10) for damage. Replace cup retainer (5) if damaged.
6. Inspect inside and outside cone area of cup retainer (5) for nicks and burrs. Replace cup retainer (5) if nicked or burred.

5-8. FUEL INJECTOR (TOP STOP) MAINTENANCE (Contd)

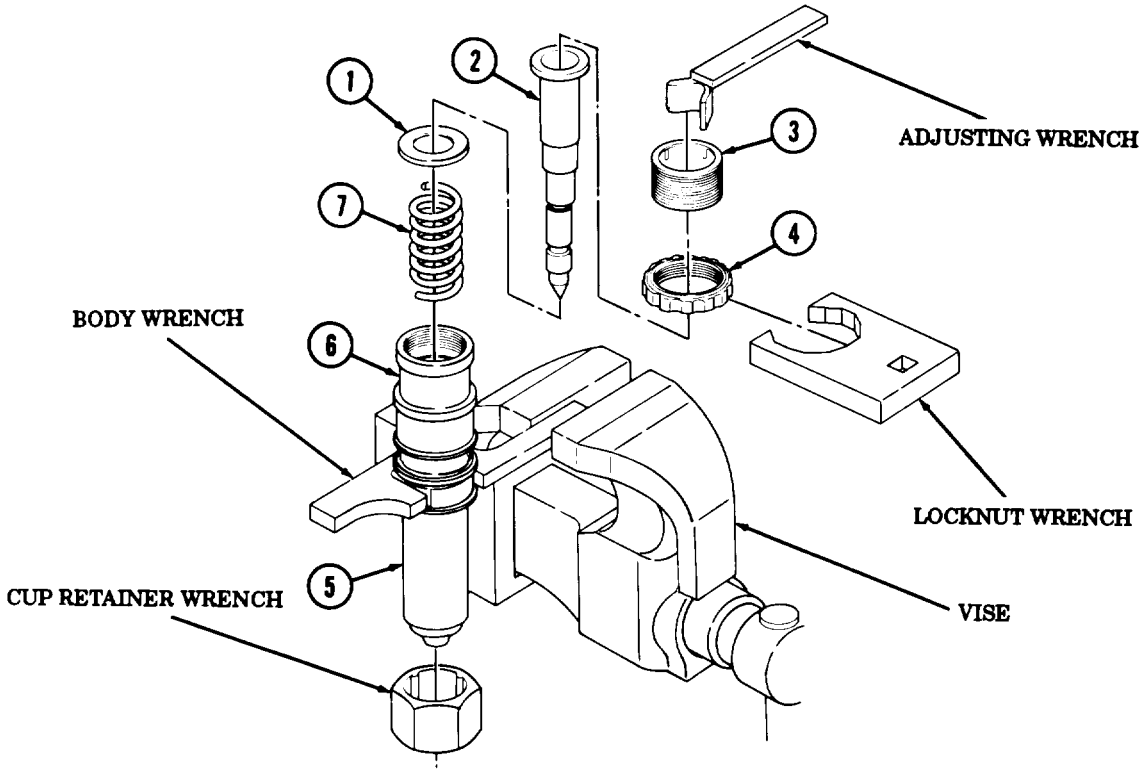

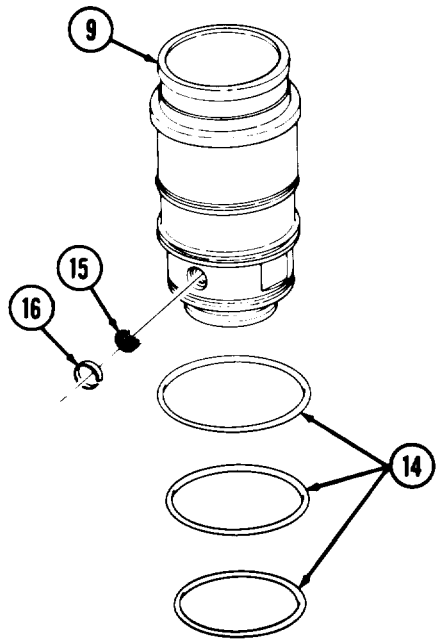

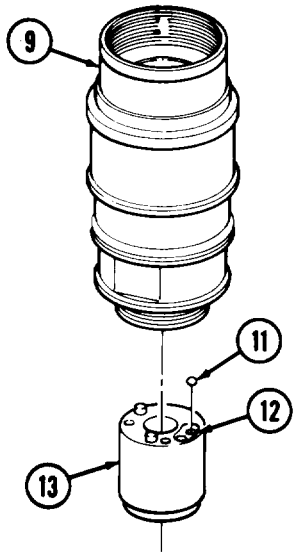

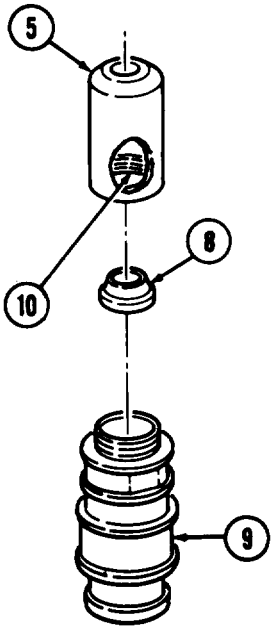

5-8. FUEL INJECTOR (TOP STOP) MAINTENANCE (Contd)

c. Assembly

CAUTION

Lubricate parts with clean diesel fuel before assembly. Do not use lubricating oil. Oil can crystallize under excessive heat, causing damage to injector.

1. Place new check ball (2) in injector barrel (3).
2. Place adapter (1) on injector barrel (3).
3. Turn adapter(1) and injector barrel (3) upright on clean cloth and place new injector cup (5) on barrel (3).
4. Install cup retainer (4) on adapter (1) and finger tighten, then back off 1/4 turn.

CAUTION

Injector barrel and plunger are a matched pair (class fit). Do not interchange. Do not touch internal parts unless hands are moistened with diesel fuel or damage to injector can result.

5. Coat injector plunger (6) with diesel fuel and install in adapter (1).
6. Insert injector (7) into loading fixture.
7. Slide body wrench over flats on injector adapter (1).
8. Position cup retainer wrench on cup retainer (4).
9. Turn loading fixture stud down until injector (7) is secure.
10. Tighten stud in loading fixture to 110 lb-in. (12.4 N•m).
11. Using cup retainer wrench, tighten cup retainer (4) 50 lb-ft (68 N•m).
12. Remove injector (7) and body wrench from loading fixture.

NOTE

Steps 13 through 15 are used to check cup retainer to plunger alinement.

13. Remove plunger (6) from injector (7). Apply a light coat of diesel fuel in plunger (6) and insert plunger (6) into injector (7).
14. Using palm of hand, press plunger (6) into injector (7) and rotate 90°.

NOTE

If plunger does not slide out of injector immediately, injector must be disassembled and assembled again to improve alinement.

15. Turn injector (7) over so cup (5) faces up. Plunger (6) should slide out of injector (7) immediately.

5-8. FUEL INJECTOR (TOP STOP) MAINTENANCE (Contd)

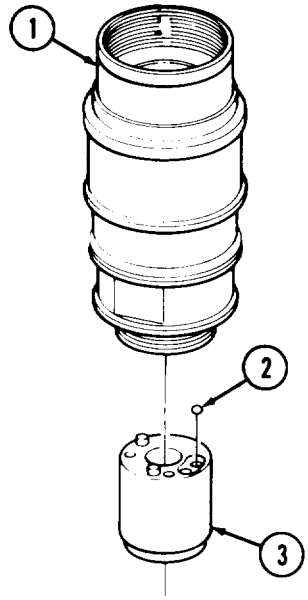

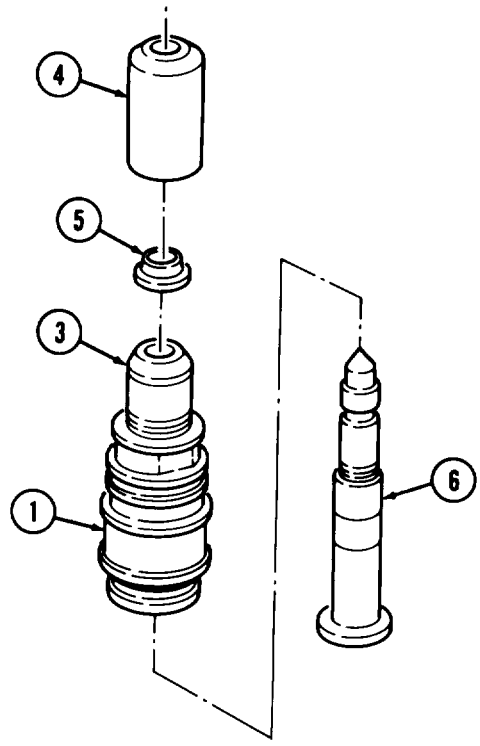

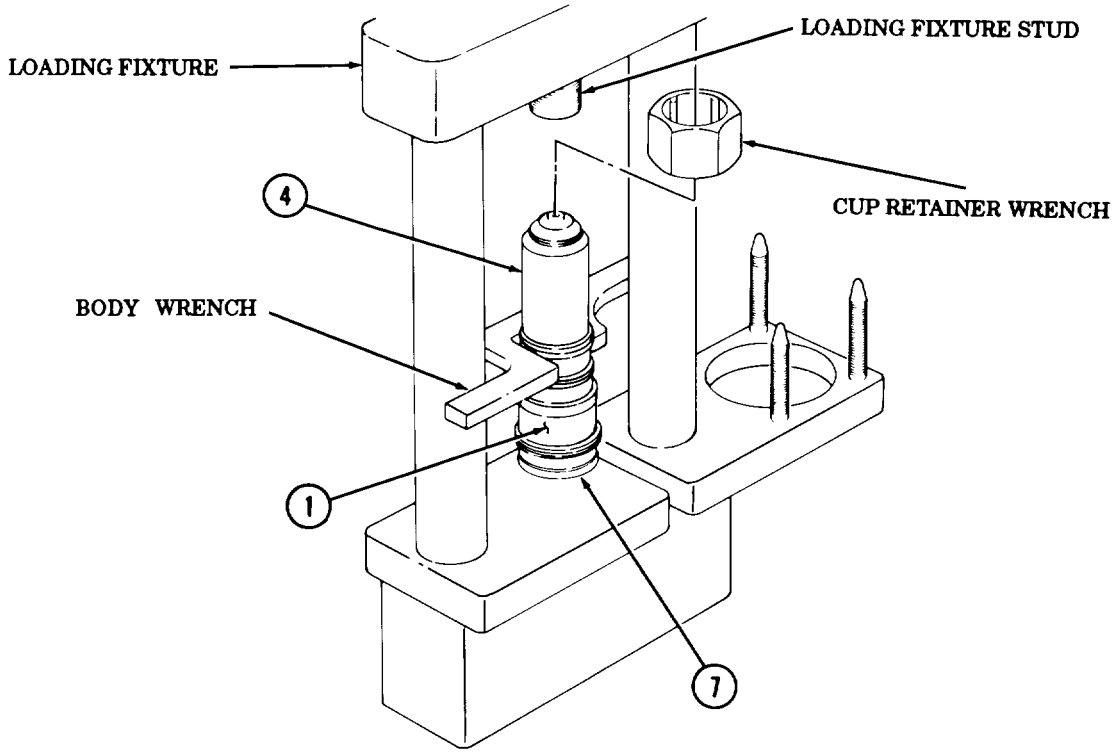

5-8. FUEL INJECTOR (TOP STOP) MAINTENANCE (Contd)

16. Install injector body wrench in vise.
17. Slide flat machined areas in fuel supply groove of injector (5) into body wrench.
18. Place spring (6) and spring retainer (1) in injector (5).
19. Install plunger (2) in injector (5).
20. Install locknut (4) and adjusting screw (3) on injector (5) with locknut wrench and adjusting wrench. Tighten locknut (4) 55 lb-ft (75 N•m).
21. Remove injector (5) from body wrench.
22. Install three new O-rings (7) on injector (5).
23. Install new fuel screen (9) on injector (5) with new retainer ring(8).

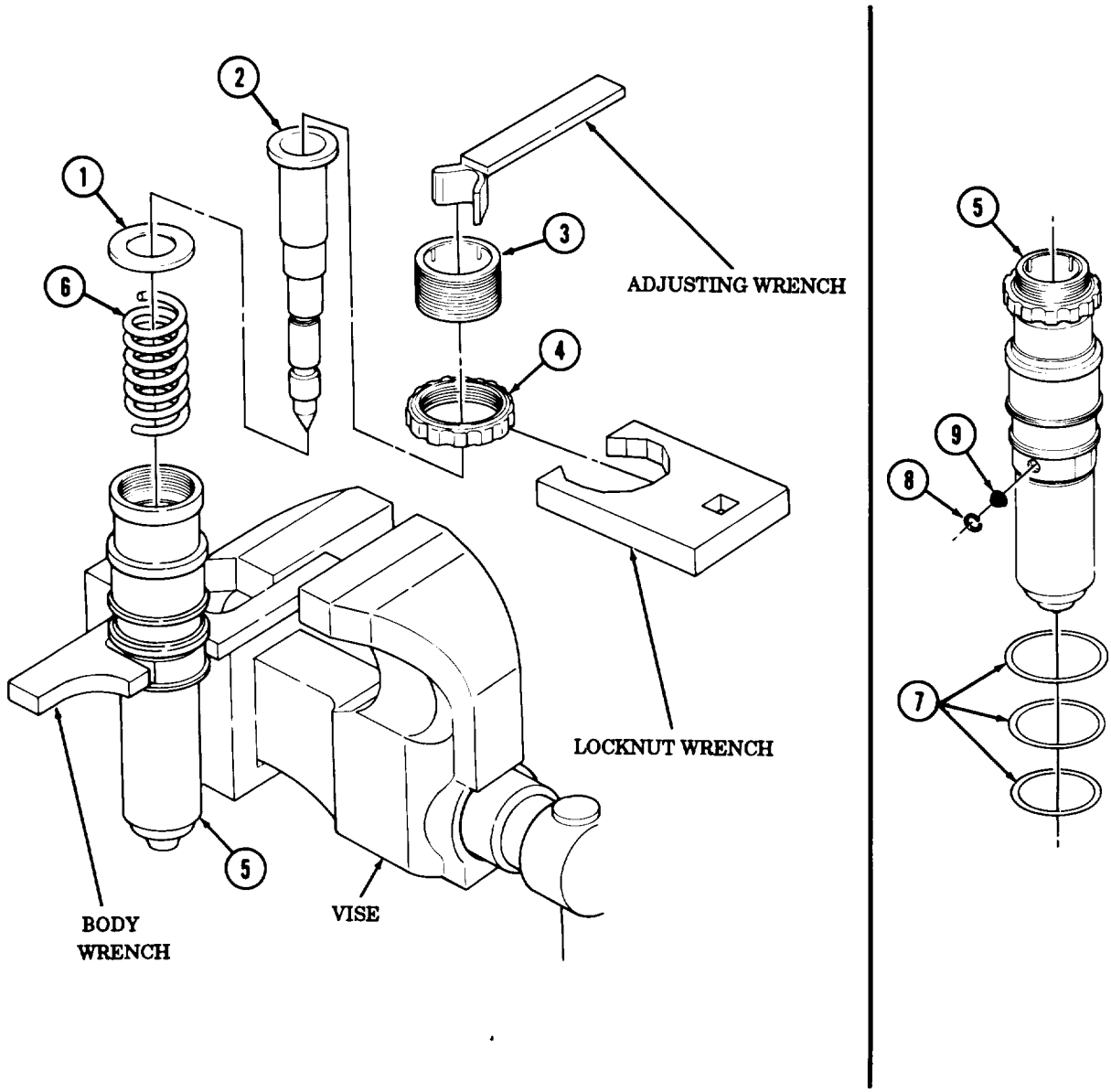

FOLLOW-ON TASK Leak test fuel injectors (para. 5-9).

5-9. INJECTOR LEAKAGE TEST

THIS TASK COVERS:

a. **Injector Leakage Tester Setup**

b. Injector Plunger and Seat Testing

INITIAL SETUP

APPLICABLE MODELS
All

SPECIAL TOOLS
Adjusting wrench (Appendix B, Item 154)
Locknut wrench (Appendix B, Item 25)

TEST EQUIPMENT
Injector leakage tester (Appendix B, Item 95)

MATERIALS/PARTS
Retaining ring (Appendix D, Item 342)
Screen (Appendix D, Item 377)

REFERENCES (TM)
TM 9-2320-260-10
TM 9-2320-260-34P-1

EQUIPMENT CONDITION
- Parking brake set (TM 9-2320-260-10).
- Fuel injectors removed (para. 5-6).

a. Injector Leakage Tester Setup

1. Set pressure regulator (3) at 60 psi (414 kPa). Read pressure setting on gage (1).

NOTE

Air pressure must stay at 60 psi (414 kPa) during all tests to obtain proper readings.

2. Operate cylinder actuation valve (2) three times then reset pressure regulator gage (1) at 60 psi (414 kPa)

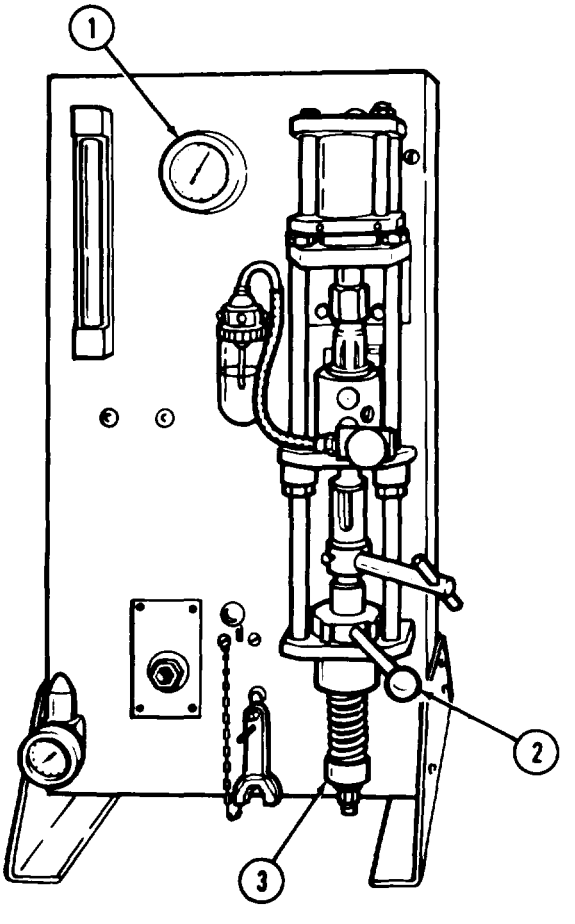

5-9. INJECTOR LEAKAGE TEST (Contd)

3. place retraction lever (3 in “A” position, and install load cell (2) on leakage tester (1).
4. Turn knob (4) until load cell (2) reads 200 psi (1379 kpa).
5. Remove load cell (2) from leakage tester (1).

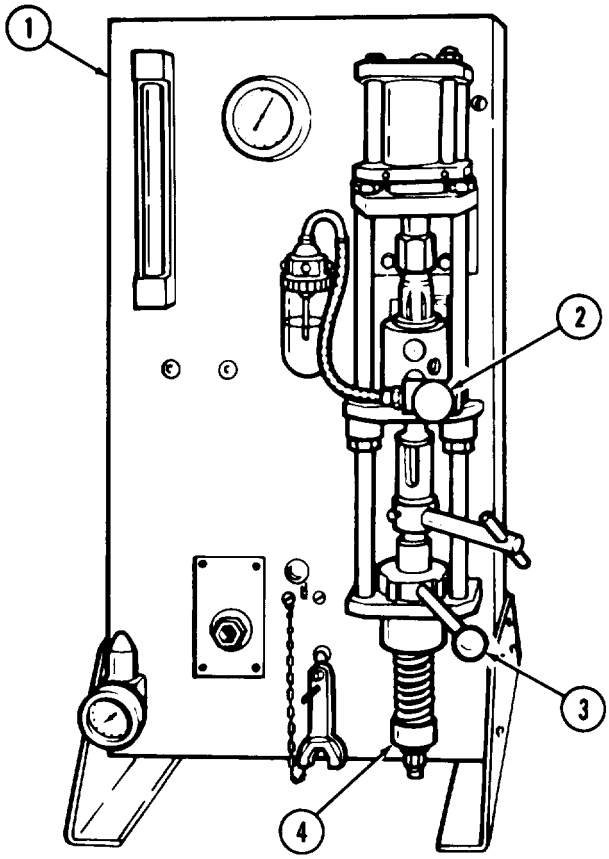

5-9. INJECTOR LEAKAGE TEST (Contd)

b. Injector Plunger and Seat Testing

NOTE

Perform step 1 for non-top stop injector.

1. Remove plunger (9) and spring (10) from injector (7).

NOTE

Perform steps 2 and 3 for top stop injector.

2. Using adjusting wrench and locknut wrench, remove locknut (12) and adjusting screw (13) from injector (7).
3. Remove plunger (9), spring retainer (14) and plunger spring (10) from injector (7).
4. Insert injector link (8) in plunger (9) then install plunger (9) in injector (7).
5. Remove retainer ring (5) and screen (6) from injector (7). Discard retaining ring (5) and screen (6).
6. Insert injector (7) in burnishing tool adapter (17). Aline injector delivery orifice (11) with hole (15) in burnishing tool adapter.
7. Insert locating screw (16) in burnishing tool adapter (17) and finger tighten screw (16) to hold injector (7) in place.

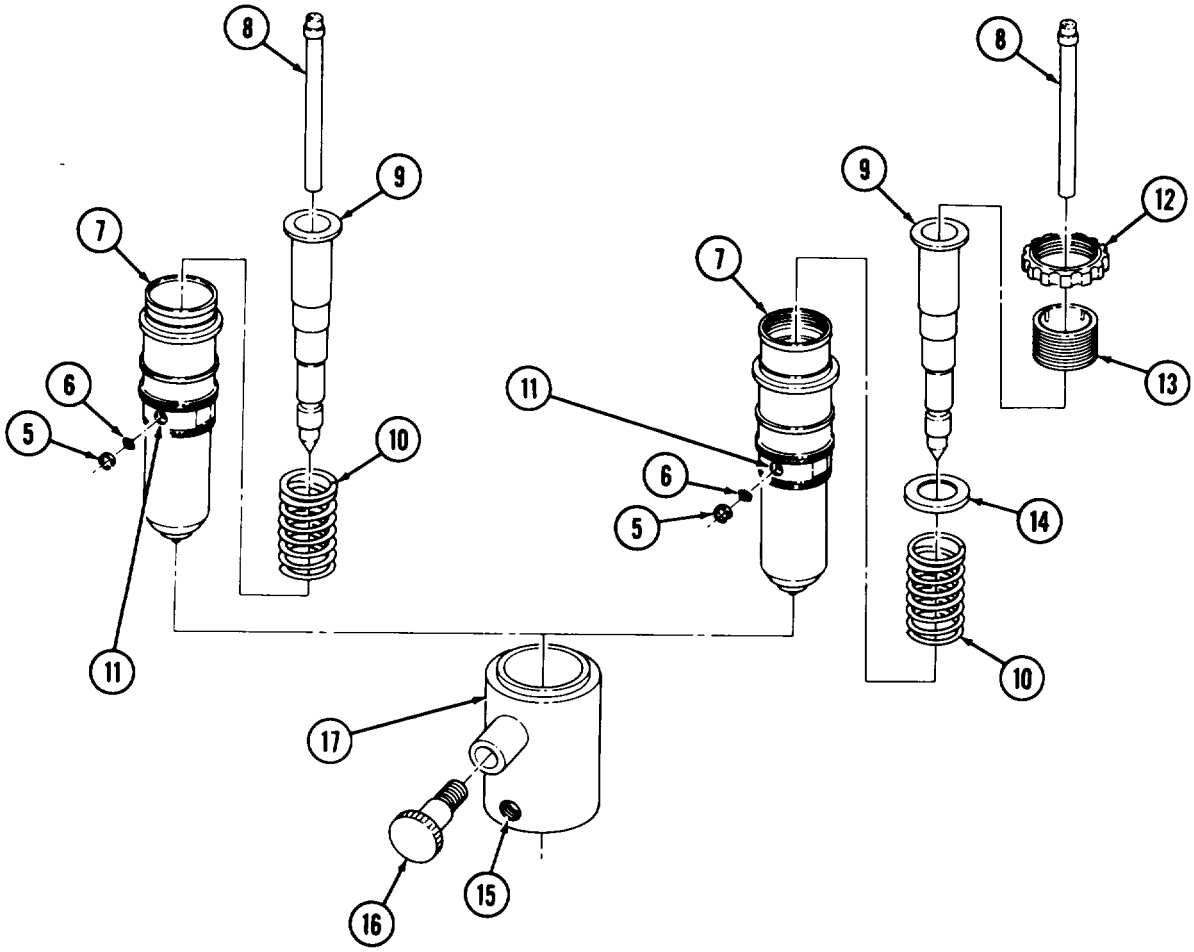

5-9. INJECTOR LEAKAGE TEST (Contd)

8. Position injector (2) on support plate (4).
9. Install support plate (4) on leakage tester (1).
10. Place feeler gage (10) between knob (8) and locknut (9). Adjust locknut (9) until it contacts feeler gage (10).
11. Install transfer line (12) on injector adapter drain port (3).

NOTE

Ensure injector plunger retracts when retraction lever is shifted from position "A" to position "B."

12. Tighten T-handle clamp (6) and shift retraction lever (7) from position "A" to position "B."
13. Rotate plunger (5) clockwise slowly while reading air flow meter (14).

NOTE

Air flow meter should not exceed 4.5 units. If reading is over 4.5 units, injector must be overhauled.

14. Rotate plunger (5) and pressure regulator (11) clockwise until highest reading is obtained on air flow meter (14).
15. Shift retraction lever (7) from position "B to position "A" and loosen T-handle clamp (6). This will apply 200 lb (91 kg) load to plunger (5).

NOTE

Once a bubble appears, observe time taken for next bubble to appear. There should be no more than one bubble every five seconds. If bubbles appear faster than five seconds, injector must be overhauled.

16. Observe checker (13) for any air bubbles. No air bubbles should appear during first ten seconds of test.
17. Remove transfer line (12) from injector adapter drainport (3).
18. Rotate pressure regulator (11) slowly to release air pressure.
19. Remove adapter (3) from leakage tester (1).

5-9. INJECTOR LEAKAGE TEST (Contd)

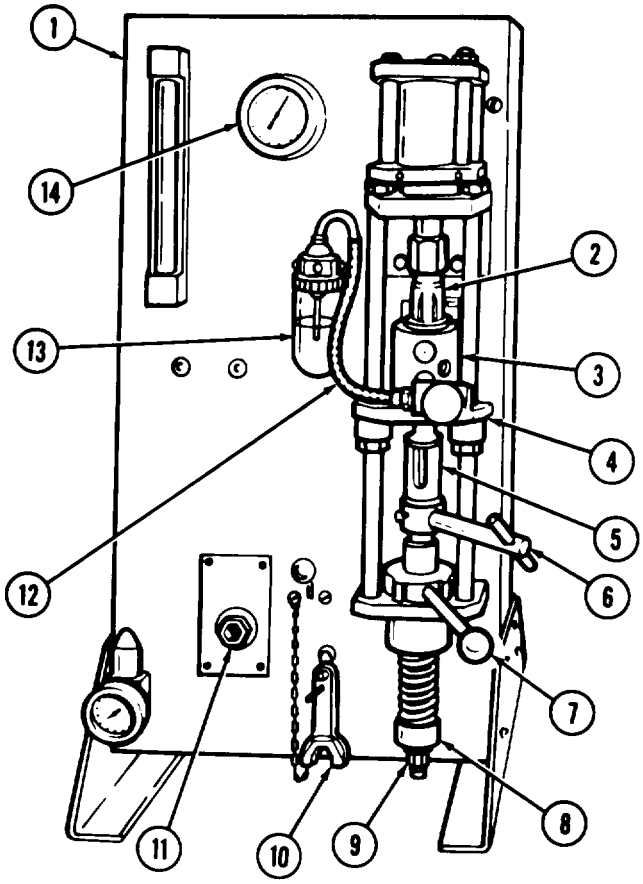

5-9. INJECTOR LEAKAGE TEST (Contd)

20. Remove locating screw (11) and injector (6) from adapter (10).
21. Install new screen (5) on injector (6) with new retainer ring (4).
22. Remove plunger (2) and injector link (1) from injector (6).

NOTE

Perform step 23 for non-top stop injector.

23. Install spring (3) and plunger (2) in injector (6).

NOTE

Perform steps 24 and 25 for top stop injector.

24. Install spring (3), spring retainer (9), and plunger (2) on injector (6).
25. Using locknut wrench and adjusting wrench, install adjusting screw (8) and locknut (7) on injector (6).

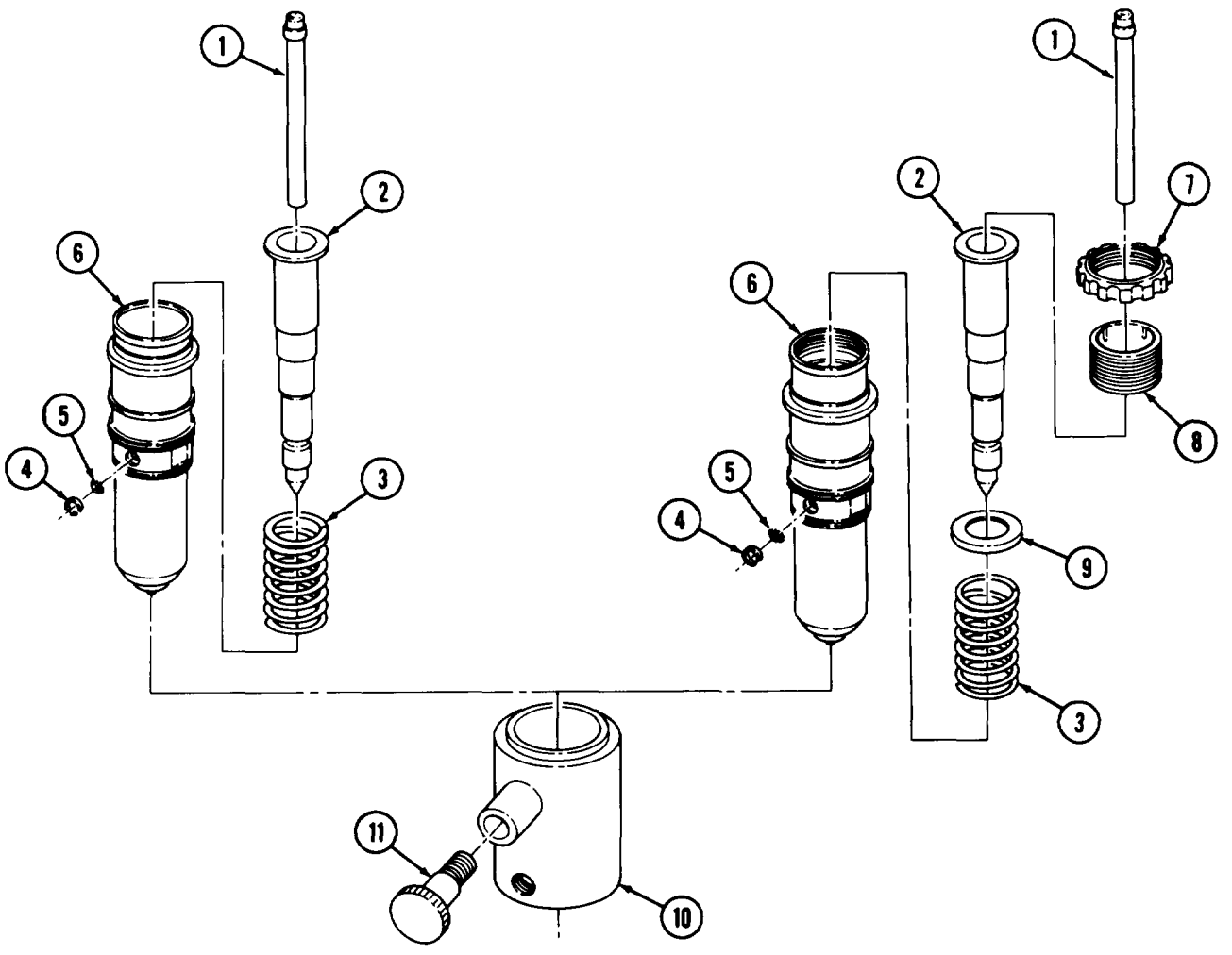

FOLLOW-ON TASK. Fuel injector pattern test (para. 5-10).

5-10. PATTERN TEST

THIS TASK COVERS:

a. Spray Pattern Tester Setup **b. Spray Pattern Test**

INITIAL SETUP

APPLICABLE MODELS
All

SPECIAL TOOLS
Adjusting wrench (Appendix B, Item 154)
Locknut wrench (Appendix B, Item 25)

TEST EQUIPMENT
Injector test stand (Appendix B, Item 26)
Spray pattern tester (Appendix B, Item 22)

MATERIALS/PARTS
Retaining ring (Appendix D, Item 342)
Screen (Appendix D, Item 377)
Diesel fuel (Appendix C, Item 13)

REFERENCES (TM)
TM 9-2320-260-10
TM 9-2320-260-34P-1

EQUIPMENT CONDITION
- Parking brake set (TM 9-2320-260-10).
- Fuel injectors removed (para. 5-6).

GENERAL SAFETY INSTRUCTIONS
Keep hands away from spray stream when fuel is forced from injector spray holes.

a. Spray Pattern Tester Setup

NOTE

Position pattern tester on or near injection test stand, or other source of 22 psi (152 kPa) constant fuel pressure, so injector inlet connection of test stand will reach injector to be spray checked. Use injector test oil or diesel fuel to perform test.

1. Attach inlet hose (3) on adapter (2).
2. Attach drain hose (4) to adapter base (5) and test stand drain area (1).

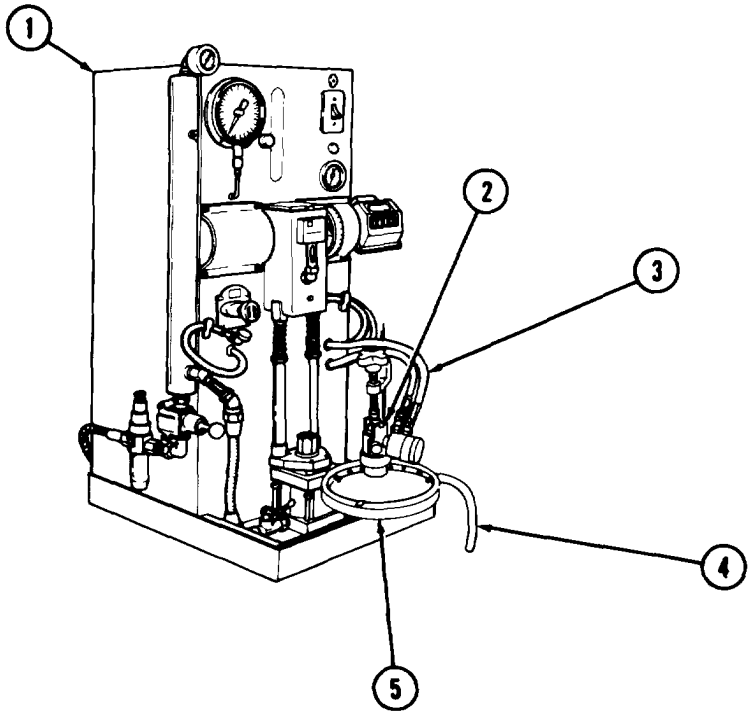

5-10. PATTERN TEST (Contd)

NOTE

Perform step 3 for non-top stop injector.

3. Remove plunger (4) and spring (5) from injector (3).

NOTE

Perform steps 4 and 5 for top stop injector.

4. Using adjusting wrench and locknut wrench, remove locknut (6), adjusting screw (7), plunger (4), spring retainer (8), and plunger spring (5) from injector (3).
5. Remove retainer ring (1) and screen (2) from injector (3). Discard retaining ring (1) and screen (2).
6. Place injector (3) in burnishing tool adapter (10).
7. Install plug (9) in adapter (10) drain opening.
8. Place injector (3) in spray pattern tester (13).
9. Install injector (3) to holddown bracket (14) with knob (12).

NOTE

Use target ring marked “8” .007 x 17°.

10. Place target ring (15) on spray pattern tester (13).

b. Spray Pattern Test

WARNING

Keep hands away from spray stream when fuel is forced from injector spray holes. Failure to do so may result in injury to personnel.

1. Apply 22 psi (152 kPa) pressure on test stand (11).

NOTE

Each spray stream from injector must hit a window in target ring. If spray stream is off 2°, replace injector cup.

2. Turn target ring (15) so one spray stream from injector (3) hits number one window.
3. Loosen knob (12) on holddown bracket (14).
4. Remove injector (3) from spray pattern tester (13).
5, Remove plug (9) from adapter (10).
6. Remove injector (3) from adapter (10).

NOTE

Perform step 7 for non-top stop injector.

7. Insert spring (5) and plunger (4) in injector (3).

NOTE

Perform steps 8 and 9 for top stop injector.

8. Insert plunger spring (5), spring retainer (8), and plunger (4) on injector (3).
9. Using locknut wrench and adjusting wrench, install adjusting screw (7) and locknut (6) on injector (3).
10. Install new screen (2) on injector (3) with new retainer ring (1).

5-10. PATTERN TEST (Contd)

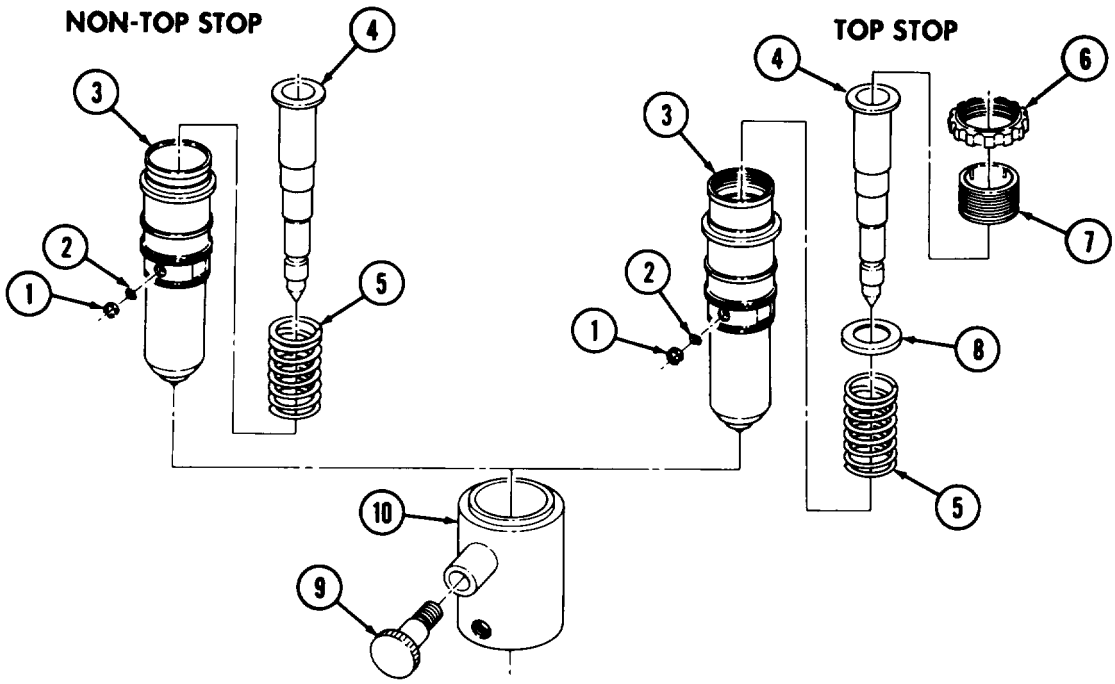

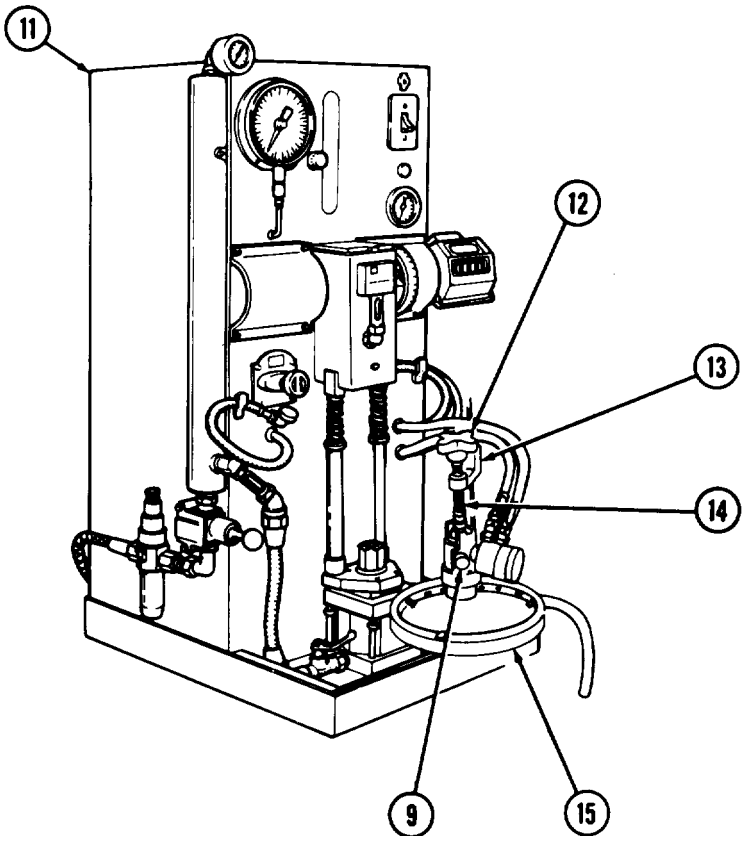

FOLLOW-ON TASK: Flow test fuel injector (para. 5-11).

5-11. FLOW TEST

THIS TASK COVERS:

a. Test Stand Setup
b. Check Ball Seating Test
c. Fuel Delivery Adjustment and Measurement

INITIAL SETUP

APPLICABLE MODELS
All

SPECIAL TOOLS
Adjusting wrench (Appendix B, Item 154
Locknut wrench (Appendix B, Item 25)

TEST EQUIPMENT
Injector test stand (Appendix B, Item 26)
Test stand link (Appendix B, Item 27)

MATERIALS/PARTS
Retaining ring (Appendix D, Item 342)
Screen (Appendix D, Item 377)

MATERIALS/PARTS (Contd)
Gasket (Appendix D, Item 117)
Orifice plug (Appendix D, Item 321)
Diesel fuel (Appendix C, Item 13)

REFERENCES (TM)
TM 9-2320-260-10
TM 9-2320-260-34P-1

EQUIPMENT CONDITION
- Parking brake set (TM 9-2320-260-10).
- Fuel injectors removed (para. 5-6).

a. Test Stand Setup

1. Remove screen retainer (1) and screen (2) from injector inlet port (3). Discard retaining ring (1) and screen (2).

NOTE

Perform step 2 for non-top stop injector.

2. Remove plunger (5) and plunger spring (6) from injector (4).

NOTE

Perform steps 3 and 4 for top stop injector.

3. Using adjusting wrench and locknut wrench, remove locknut (7) and adjusting screw (8) from injector (4).
4. Remove plunger (5), spring retainer (9), and plunger spring (6) from injector (4).
5. Place plunger (5) in injector (4).
6. Lubricate inside of burnishing tool adapter (10) with diesel fuel.
7. Position injector (4) in burnishing tool adapter (10) so injector inlet port (3) and adapter inlet holes (11) aline.
8. Install locating screw (12) in burnishing tool adapter (10).
9. Connect pressure line adapter (13) to burnishing tool adapter (10).

5-11. FLOW TEST (Contd)

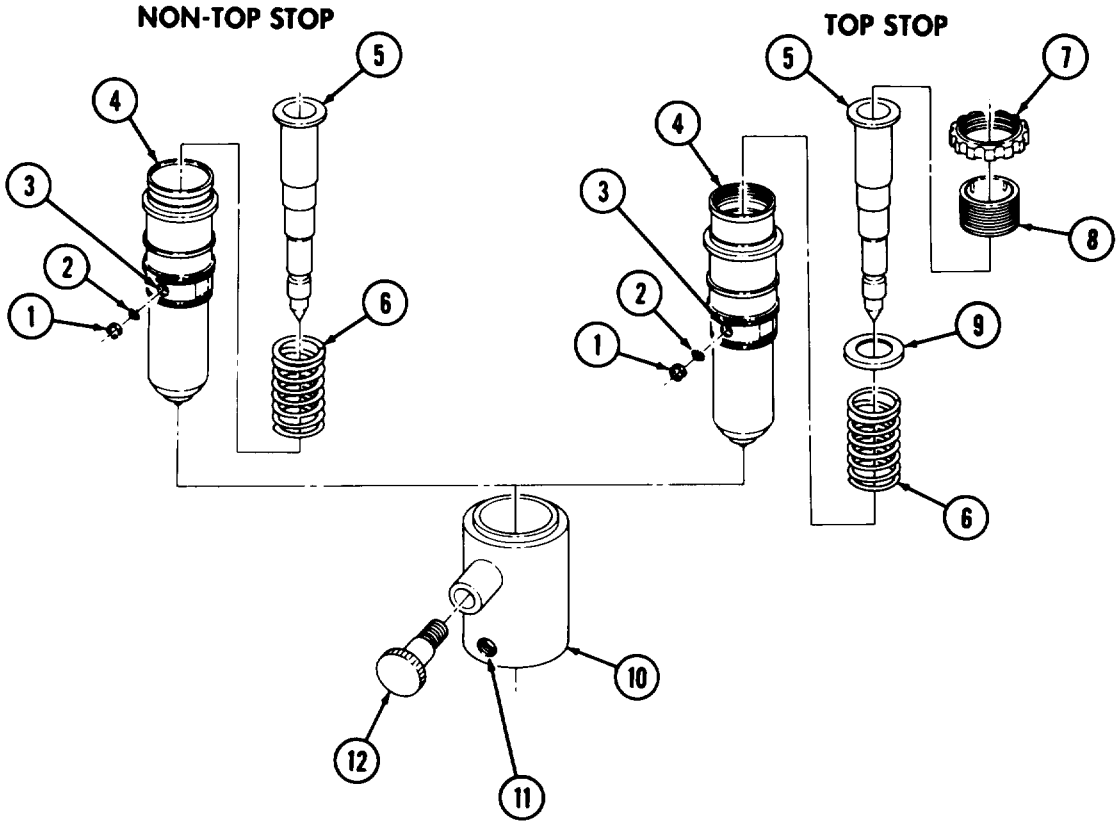

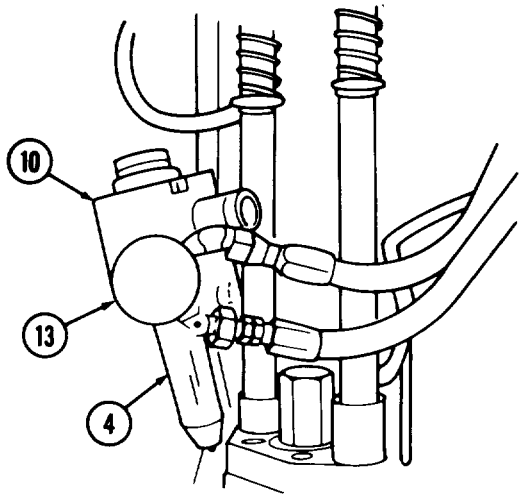

5-11. FLOW TEST (Contd)

b. Checkball Seating Test

NOTE

Do not place injector in stand. Hold injector in hand with thumb over plunger.

1. Place test stand motor switch (2) in start position.

CAUTION

Temperature must not exceed 135°F (57°C). Drain and replace test oil if temperature exceeds limit.

2. Temperature gage (3) should read 90°-95°F (32°-35°C).
3. Adjust regulator knob (4) until pressure gage (1) reads 150 psi (1034 kPa).

NOTE

Inspect burnishing tool installation hole for leaks. A slight seepage is not harmful. Replace check ball if leakage is found.

4. Inspect burnishing tool installation hole (7) for leaks.
5. Place test stand motor switch (2) to OFF position.
6. Disconnect inlet pressure line adapter (6) from burnishing tool adapter (5).

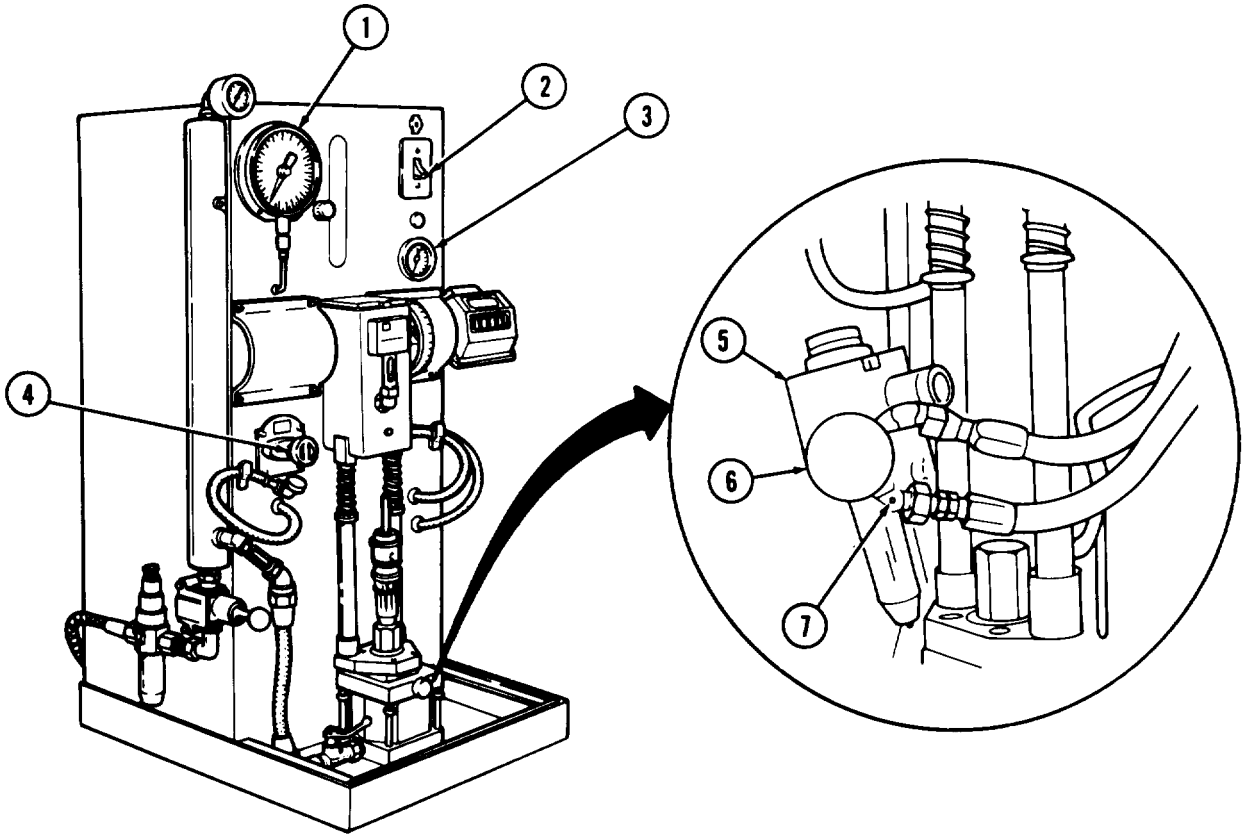

5-11. FLOW TEST (Contd)

c. Fuel Delivery Adjustment and Measurement

1. Remove plunger (9) from injector (8).
2. Install spring (10) and plunger (9) in injector (8).
3. Install retainer plate (13) on burnishing tool adapter (5) with two pins (11).

NOTE

Use test stand link 6.5 in. (17 cm) long.

4. Place test stand link (12) in burnishing tool adapter (5).
5. Position injector (8) in injector seat (14) on test stand (15).

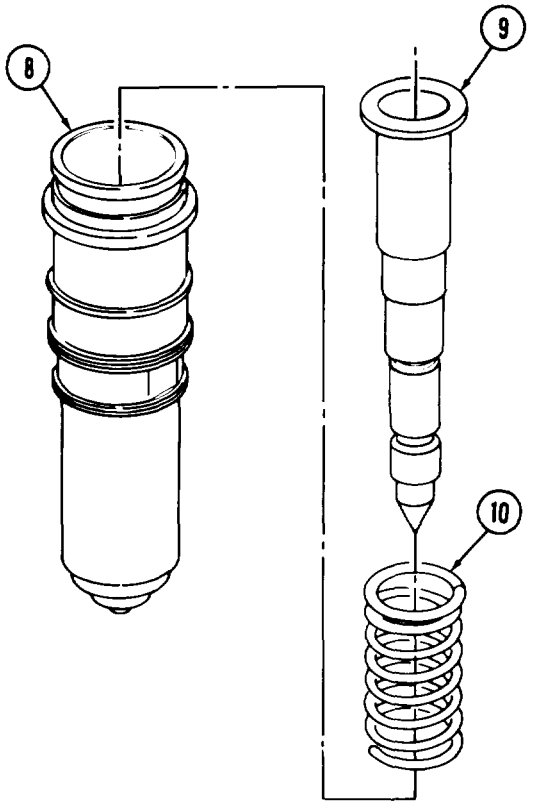

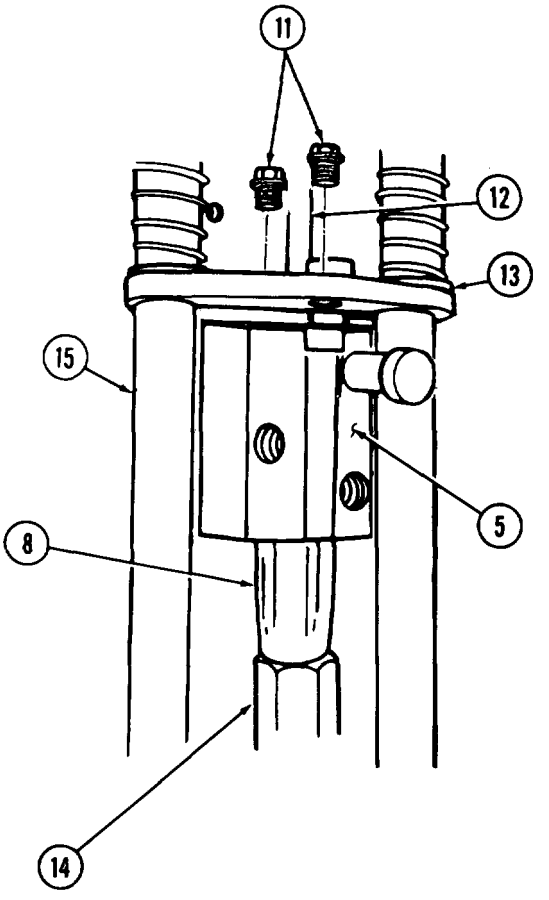

5-11. FLOW TEST (Contd)

6. Install burnishing tool (6) in test stand inlet pressure line adapter (15).

NOTE

With burnishing tool needles retracted, burnishing tool can be left in adapter during entire test.

7. Retract burnishing tool needle (14) by pulling knob (13) out.
8. Connect inlet pressure line adapter (15) to burnishing tool adapter inlet hole (16).
9. Install drain connector (11) on burnishing tool adapter inlet hole (12).
10. Clamp injector (7) in place by opening air valve (9).
11. Close hydraulic valve (8) to lock injector (7) in place.

CAUTION

Temperature should read 90°-95°F (32°-35°C). If temperature exceeds 135°F (57°C), drain and replace with new test oil.

12. Place motor switch (3) in start position.
13. Adjust regulator knob (10) until pressure gage (1) reads 120 psi (827 kPa).
14. Press red flow start switch (4) until counter (5) reads the same as master injector counter strokes.

NOTE

Correct reading is 121-122 cc at 120 psi (827 kPa). If reading is higher, follow steps 17 through 26 to install new orifice plug. However, if reading is lower continue flow test step 34.

15. Observe reading on vial (2).
16. Remove test stand inlet pressure line adapter (15) from burnishing tool adapter inlet hole (16).

5-11. FLOW TEST (Contd)

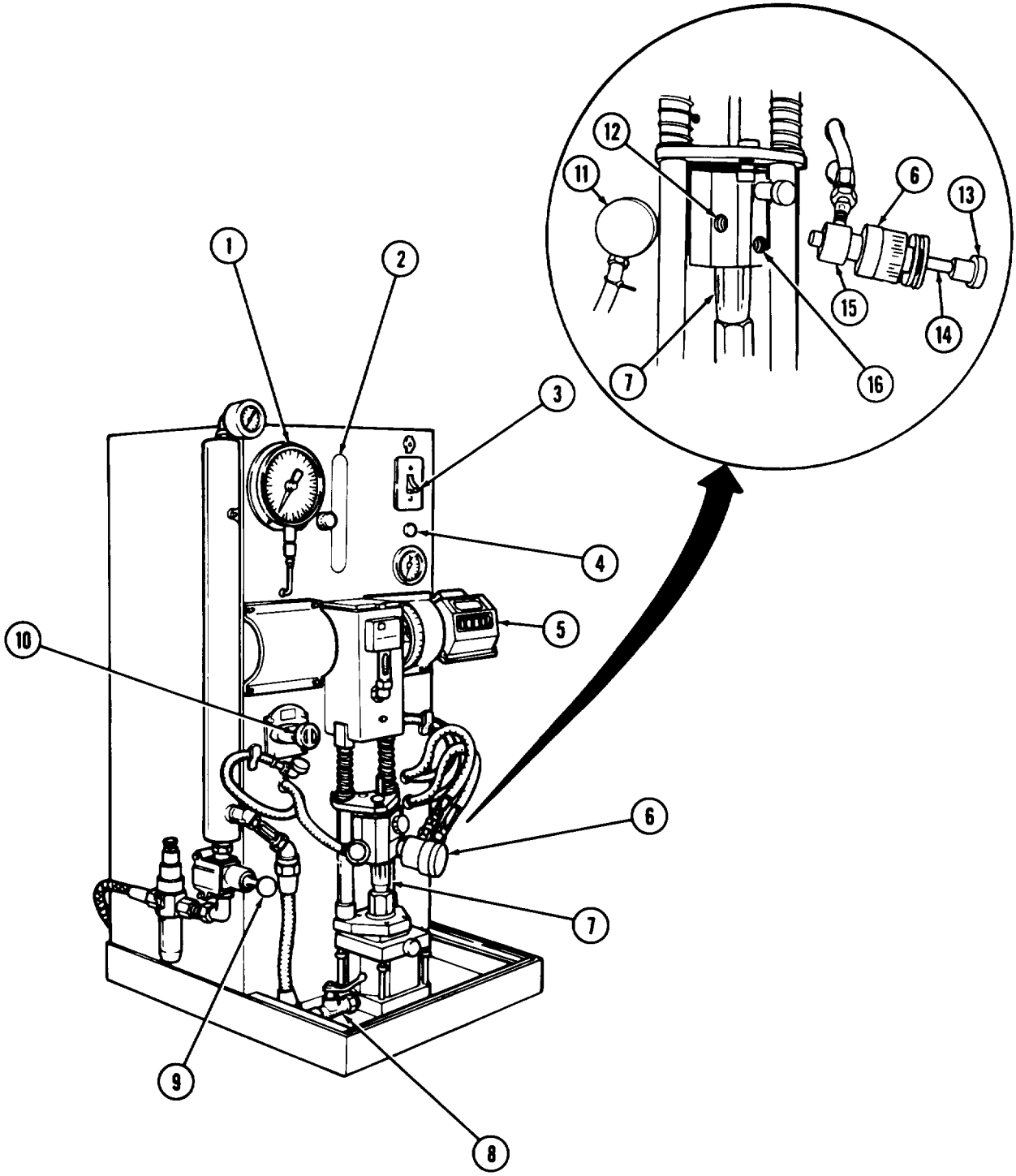

5-11. FLOW TEST (Contd)

17. Remove orifice plug (3) and gasket (2) from injector (1). Discard gasket (2) and orifice plug(3).
18. Install new gasket (2) and new orifice plug (3) in injector (1). Tighten orifice plug(3) 8-10 lb-in (0.9-1.1 N•m).
19. Install inlet pressure line adapter (13) and burnishing tool (11) on burnishing tool adapter (9).

CAUTION

When seating burnishing tool, use care not to push small knob in too hard or over-tighten indicator knob. When slight contact is made, stop. Injector can be damaged if over tightened. Test stand must be running while burnishing.

NOTE

Burnishing cleans injector inlet orifice and sets fuel flow.

20. Turn indicator knob (12) until spaced 0.375 in. (9.5 mm) from knob (13).
21. Slowly push knob (10) in until contact is made with injector (1).
22. Turn knob (10) counterclockwise to knob (13) and indicator knob (12).
23. Slowly turn indicator knob (12) inward until seated in injector (1). Do not over tighten.
24. Aline index indicator knob (12) with mark on knob (13).
25. Advance indicator knob (12) one mark then back off until spaced 0.375 in. (9.5 mm) from knob (13).

NOTE

Perform steps 12 through 15 and recheck fuel delivery. If delivery is lower than 121-122 cc, repeat steps 20 through 25. If reading is higher, install new orifice plug (steps 17 through 19), and recheck fuel delivery.

26. Place motor switch (5) on test stand (4) in OFF position.
27. Remove drain connector (6) from burnishing tool adapter (9).
28. Remove inlet pressure line adapter (14) from burnishing tool adapter (9).
29. Remove burnishing tool (11) from burnishing tool adapter (9).
30. Open hydraulic valve (7) on test stand (4).
31. Close air valve (8) on test stand (4).

5-11. FLOW TEST (Contd)

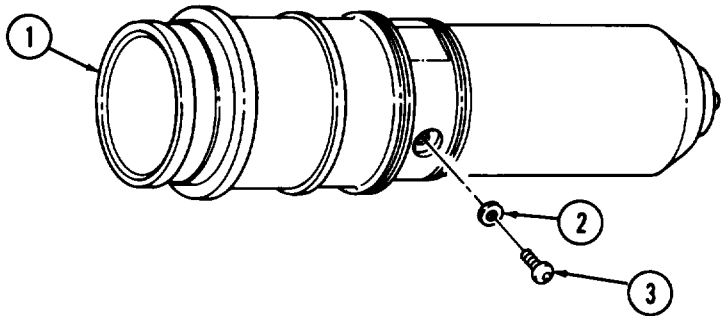

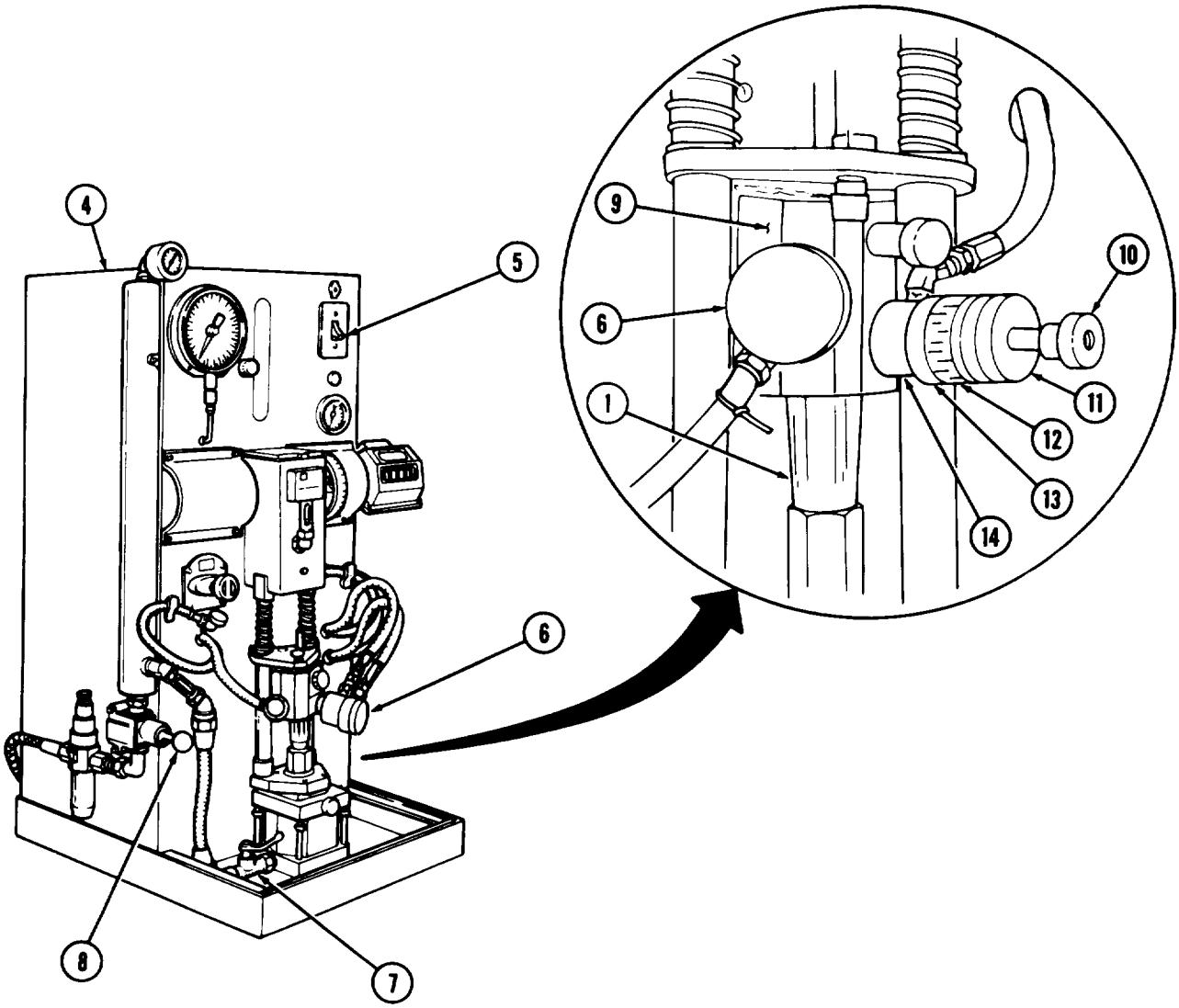

5-11. FLOW TEST (Contd)

32. Remove test stand link (2) from burnishing tool adapter (5).
33. Remove two pins (1), retainer plate (3), and burnishing tool adapter (5)from tests stand (6).
34. Remove locking screw (4)and injector (9) from adapter(5).
35. Install new screen (8) on injector (9) with new retainer ring (7).

NOTE

Perform step 36 for non-top stop injector.

36. Install spring (11) and plunger (10) in injector (9).

NOTE

Perform steps 37 and 38 for top stop injector.

37. Install plunger spring (11), spring retainer (14), and plunger (10) on injector (3).
38. Using adjusting wrench and locknut wrench, install adjusting screw (13) and locknut (12) on injector (9).

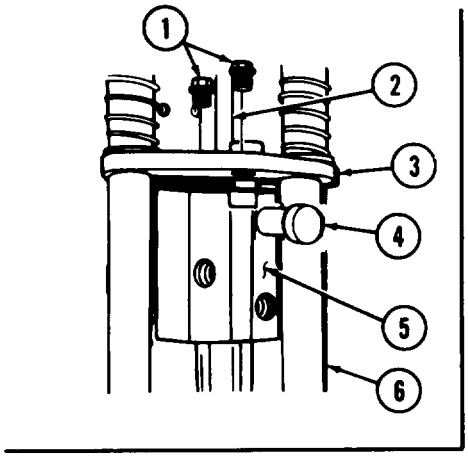

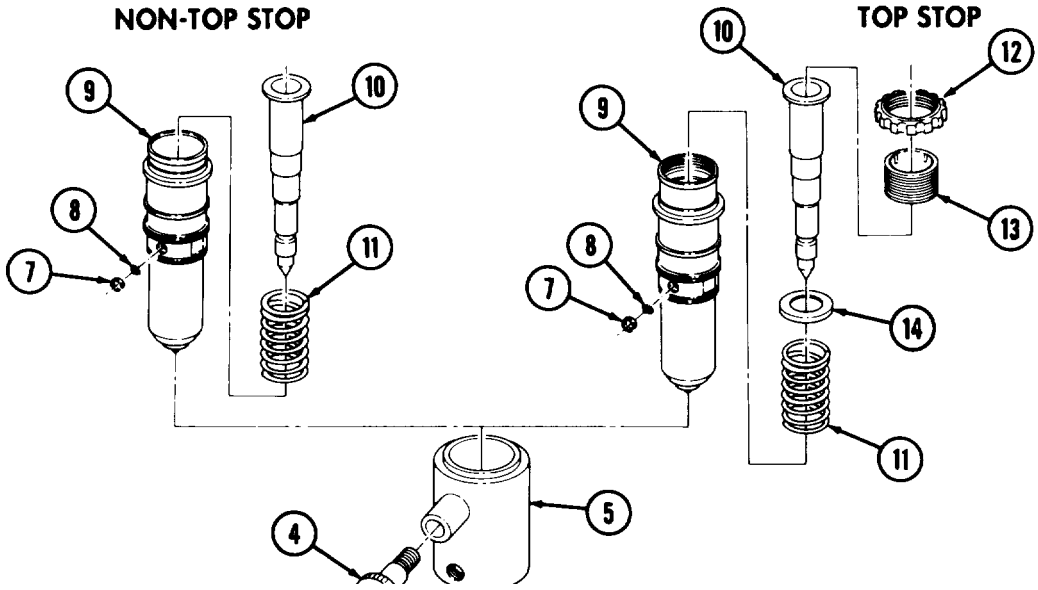

FOLLOW-ON TASK: Install injector (para. 5-6).

Section III. FUEL PUMP MAINTENANCE

5-12. FUEL PUMP MAINTENANCE INDEX

PARA. NO.	TITLE	PAGE NO.
5-13.	Fuel Pump Replacement	5-38
5-14.	Fuel Pump Mounting to Holding Fixture	5-42
5-15.	Fuel Pump Shutoff Valves Replacement	5-43
5-16.	Pulsation Damper Maintenance	5-45
5-17.	Pressure Gear Pump Replacement	5-47
5-18.	Fuel Pump Spring Pack Maintenance	5-48
5-19.	Upper Spring Pack Maintenance	5-50
5-20.	Damper Maintenance	5-54
5-21.	Fuel Pump Air Cylinder Maintenance	5-56
5-22.	Fuel Pump Governor Replacement	5-58
5-23.	Fuel Pump Housing Maintenance	5-62
5-24.	Fuel Pump Front Cover Maintenance	5-66
5-25.	Fuel Pump Calibration	5-68

5-13. FUEL PUMP REPLACEMENT

THIS TASK COVERS:

a. Removal **b. Installation**

INITIAL SETUP

APPLICABLE MODELS
All

TOOLS
General mechanic's tool kit
(Appendix B, Item 1)

MATERIALS/PARTS
Two lockwashers (Appendix D, Item 225)
Four lockwashers (Appendix D, Item 217)
Gasket (Appendix D, Item 119)

REFERENCES (TM)
TM 9-2320-260-10
TM 9-2320-260-20
TM 9-2320-260-34P-1

EQUIPMENT CONDITION
- Hood raised and secured (TM 9-2320-260-10).
- Fuel supply and return tubes removed (TM 9-2320-260-20).

GENERAL SAFETY INSTRUCTIONS
Diesel fuel is flammable. Do not perform this task near open flame.

a. Removal

WARNING

Diesel fuel is flammable. Do not perform fuel system procedures near open flame. Injury to personnel may result.

1. Disconnect tachometer driveshaft cable (4) from fuel pump (14).
2. Remove nut (11) and emergency shutdown control wire (9) from emergency shutoff valve (8).
3. Remove nut (5) and emergency control cable (10) from manual shu off valve (7).
4. Disconnect fuel supply tube (6) from manual shutoff valve (7).

NOTE

Perform step 5 for M816 and M819 vehicles.

5. Remove two screws (28), lockwashers (29), and air cylinder bracket (27) from VS governor (26). Discard lockwashers (29).
6. Disconnect primer pump fuel line (15) from fuel pump (14).
7. Disconnect fuel inlet line (13) from fuel Pump (14).
8. Disconnect fuel return tube (12) from fuel pump (14).
9. Remove spring (23) from accelerator lever (19) and bracket (25).
10. Remove nut (16), screw (18), and accelerator rod (17) from accelerator lever (19).
11. Remove four screws (20), washers (21), lockwashers (22), fuel pump (14), and gasket(3) from air compressor (1). Discard lockwashers (22) and gasket (3).
12. Remove spider coupling (2) from coupling drive (24).

5-13. FUEL PUMP REPLACEMENT (Contd)

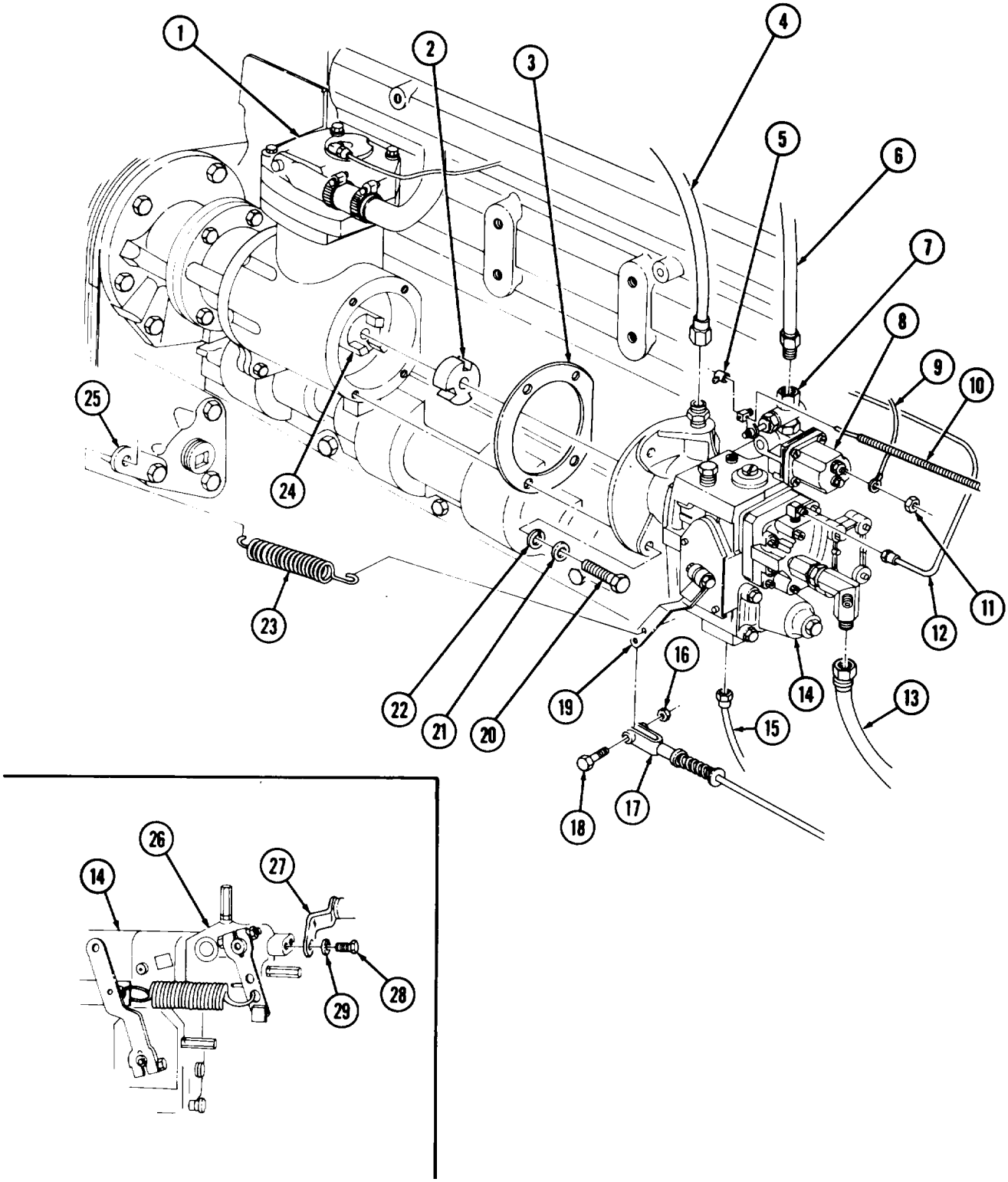

FOR M816 AND M819 VEHICLES ONLY

5-13. FUEL PUMP REPLACEMENT (Contd)

b. Installation

1. Position spider coupling (2) on coupling drive (24).
2. Install new gasket (3) and fuel pump (14) on air compressor (1) with four new lockwashers (22), washers (21), and screws (20).
3. Install spring (23) on accelerator lever (19) and bracket (25).
4. Install accelerator rod (17) on accelerator lever (19) with screw (18) and nut (16).
5. Connect fuel return tube (12) on fuel pump (14).
6. Connect fuel inlet line (13) on fuel pump (14).
7. Connect primer pump fuel line (15) on fuel pump (14).

NOTE

Perform step 8 for vehicles M816 and M819.

8. Install air cylinder bracket (27) on VS governor (26) with two new lockwashers (29) and screws (28).
9. Install fuel supply tube (6) on manual shutoff valve (7).
10. Install emergency control cable (10) on manual shutoff valve (7) with nut (5).
11. Install emergency shutdown control wire (9) on emergency shutoff valve (8) with nut (11).
12. Connect tachometer driveshaft cable (4) on fuel pump (14).

5-13. FUEL PUMP REPLACEMENT (Contd)

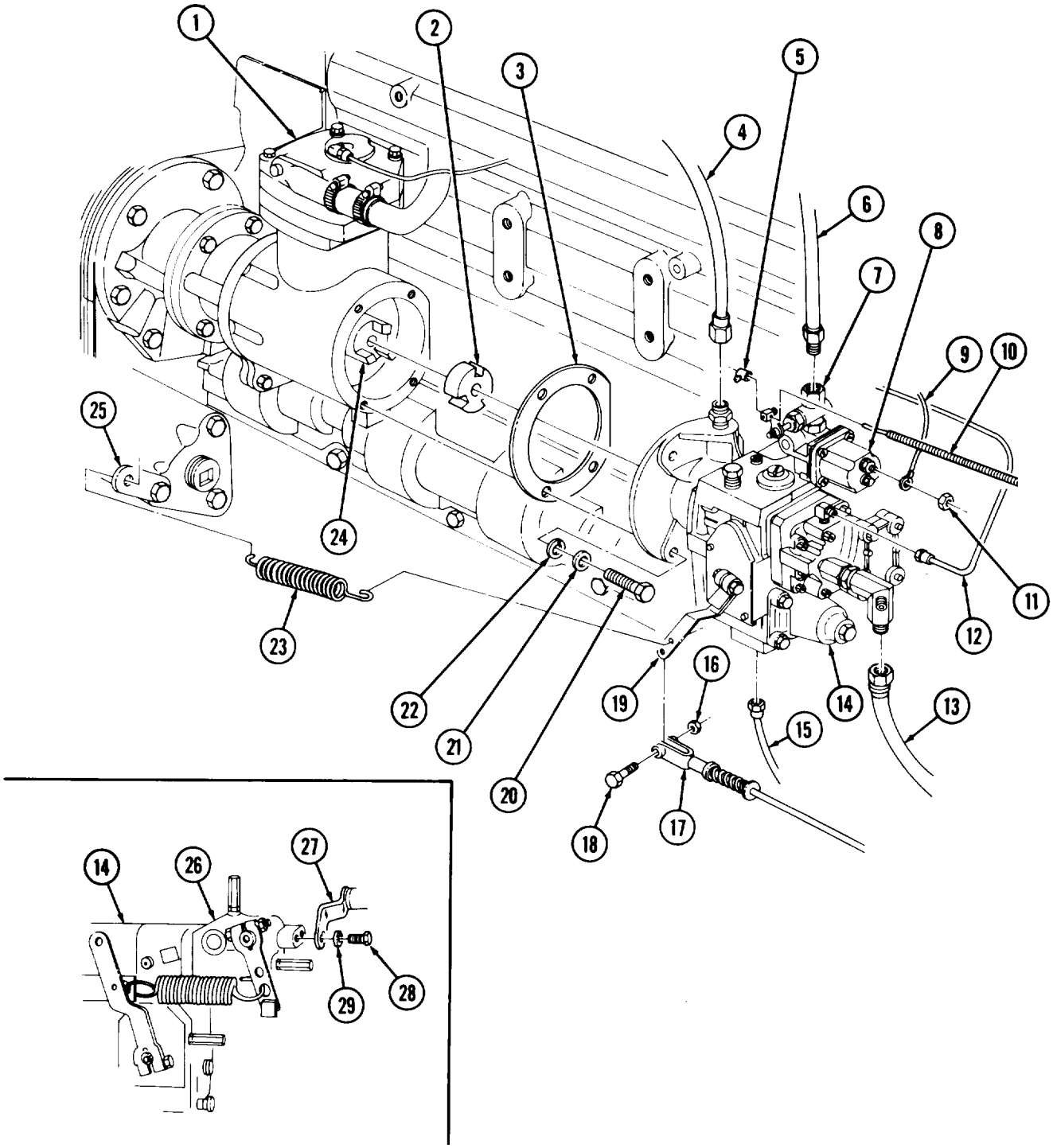

FOR M816 AND M819 VEHICLES ONLY

FOLLOW-ON TASK: Install fuel supply and return tubes (TM 9-2320-260-20).

5-14. FUEL PUMP MOUNTING TO HOLDING FIXTURE

THIS TASK COVERS:

a. Installation **b. Removal**

INITIAL SETUP

APPLICABLE MODELS
All

TOOLS
General mechanic's tool kit
(Appendix B, Item 1)

SPECIAL TOOLS
Fuel pump mounting plate
(Appendix B, Item 29)
Swivel vise (Appendix B, Item 28)

REFERENCES (TM)
TM 9-2320-260-34P-1

EQUIPMENT CONDITION
Fuel pump removed from engine (para. 5-13).

a. Installation

1. Install mounting plate (2) on swivel vise (5) with two screws (6).
2. Install fuel pump (4) on mounting plate (2) with two screws (1) and nuts (3).

b. Removal

1. Remove two nuts (3), screws (1), and fuel pump (4) from mounting plate (2).
2. Remove two screws (6) and mounting plate (2) from swivel vise (5).

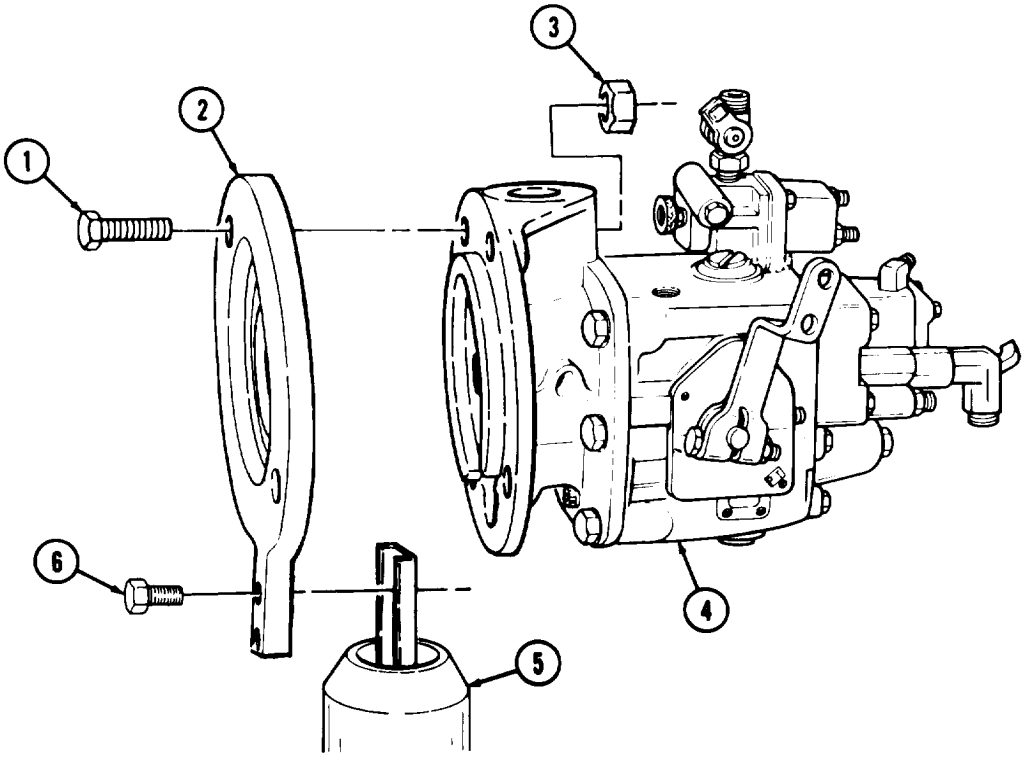

FOLLOW-ON TASK: Install fuel pump on engine (para. 5-13).

5-15. FUEL PUMP SHUTOFF VALVES REPLACEMENT

THIS TASK COVERS:

a. Removal **b. Installation**

INITIAL SETUP

APPLICABLE MODELS
All

TOOLS
General mechanic's tool kit
(Appendix B, Item 1)

MATERIALS/PARTS
O-ring (Appendix D, Item 276)
Two lockwashers (Appendix D, Item 233)

REFERENCES (TM)
TM 9-2320-260-10
TM 9-2320-260-20
TM 9-2320-260-34P-1

EQUIPMENT CONDITION
- Hood raised and secured (TM 9-2320-260-10).
- Battery ground cable disconnected (TM 9-2320-260-20).

GENERAL SAFETY INSTRUCTIONS
Diesel fuel is flammable. Do not perform this task near open flame,

a. Removal

WARNING

Diesel fuel is flammable. Do not perform fuel system procedures near open flame. Injury to personnel may result.

1. Loosen screw (1) and remove nut (2) and emergency shutoff cable (6) from fuel shutoff lever (3).
2. Remove fuel supply tube (4) from manual shutoff valve (5).
3. Remove nut (11) and wires (10) from shutoff solenoid (14).
4. Remove two screws (7), lock washers (8), washers (9), shutoff solenoid (14), and O-ring (12) from fuel pump (13). Discard lockwashers (8) and O-ring (12).
5. Remove manual shutoff valve (5) from shutoff solenoid (14).

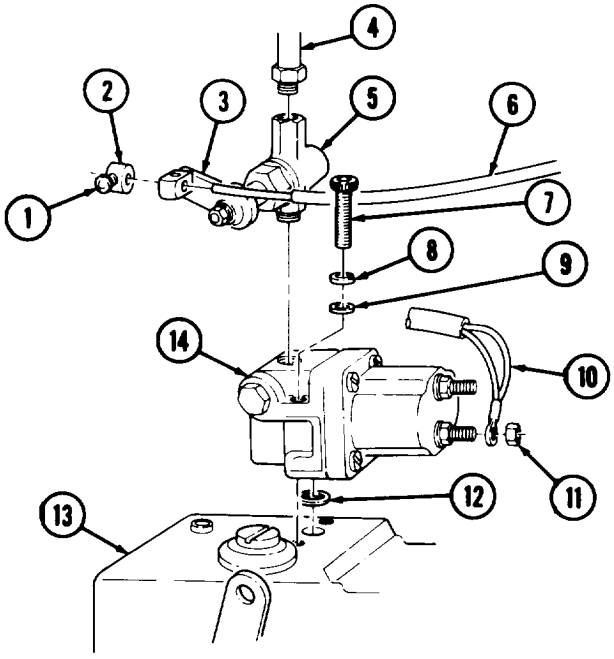

5-15. FUEL PUMP SHUTOFF VALVES REPLACEMENT (Contd)

b. Installation

1. Install manual shutoff valve (5) on shutoff solenoid (14).
2. Install new O-ring (12) and shutoff solenoid (14) on fuel pump (13) with two washers (9), new lockwashers (8), and screws (7).
3. Install wires (10) on shutoff solenoid (14) with nut (11).
4. Install emergency shutoff cable (6) on fuel shutoff lever (3) with nut (2). Tighten screw (1).
5. Install fuel supply tube (4) on manual shutoff valve (5).

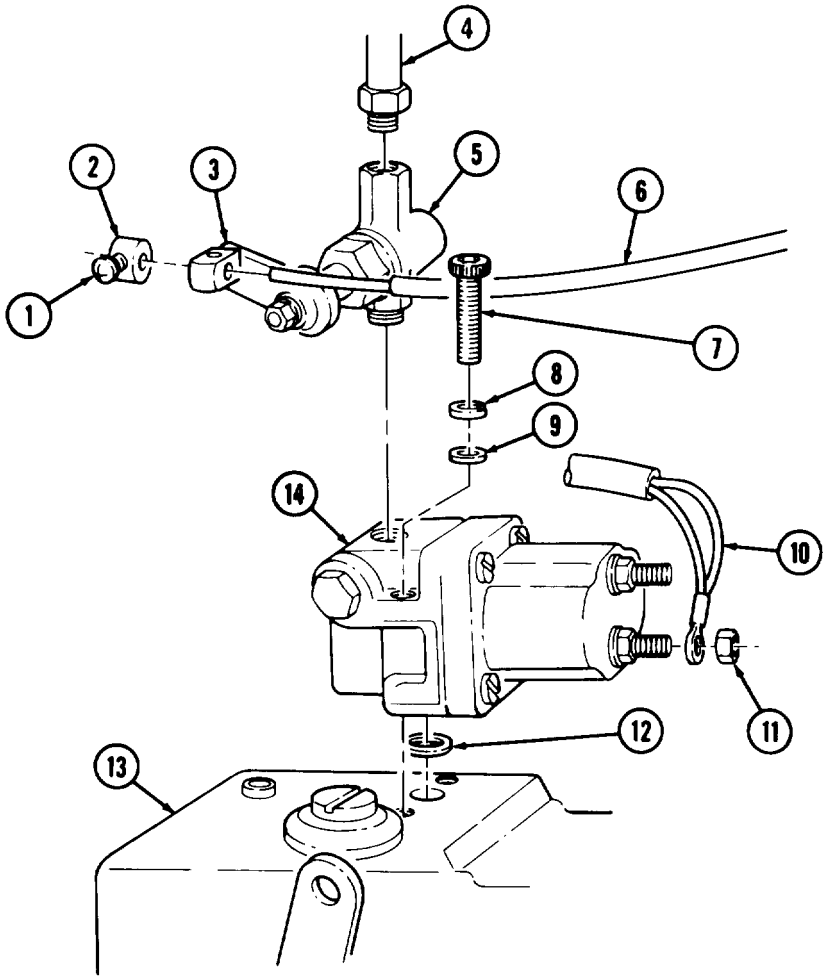

FOLLOW-ON TASKS: • Connect battery ground cable (TM 9-2320-260-20).
Ž Start engine (TM 9-2320-260-10) and check fuel pump shutoff valve for proper operation.

5-16. PULSATION DAMPER MAINTENANCE

THIS TASK COVERS:

a. Removal
b. Disassembly
c. Inspection
d. Assembly
e. Installation

INITIAl SETUP

APPLICABLE MODELS
All

TOOLS
General mechanic's tool kit (Appendix B, Item 1)

MATERIALS/PARTS
Two lockwashers (Appendix D, Item 233)
Two Iockwashers (Appendix D, Item 225)
Seal (Appendix D, Item 422)
O-ring (Appendix D, Item 278)

MATERIAIS/PARTS (Contd)
O-ring (Appendix D, Item 280)
Nylon washer (Appendix D, Item 266)
Disk (Appendix D, Item 55)

REFERENCES (TM)
TM 9-2320-260-34P-1

EQUIPMENT CONDITION
Fuel pump mounted to holding fixture (para. 5-14).

a. Removal

Remove two screws (6), lockwashers (5), washers (4), pulsation damper (3), and seal (2) from fuel pump (1). Discard seal (2) and lockwashers (5).

b. Disassembly

Remove two screws (7), lockwashers (8), damper body (14), O-ring (9), disk (10), O-ring (11), and nylon washer (12) from plate (13). Discard lockwashers (8), disk (10), O-rings (11) and (9) and nylon washer (12).

c. Inspection

Inspect damper body (14) and plate (13) for corrosion and cracks. Replace damper body (14) and plate (13) if corroded or cracked.

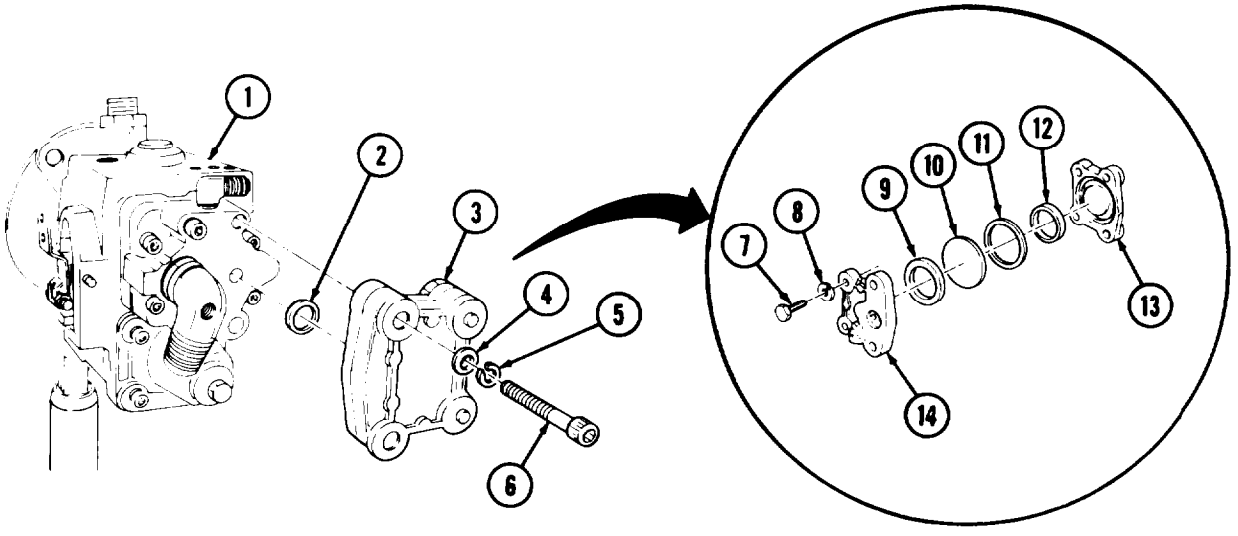

5-16. PULSATION DAMPER MAINTENANCE (Contd)

d. Assembly

1. Place new nylon washer (12) on plate (13).
2. Place new O-ring (9), new disk (10), and new O-ring (11) on damper body (14).
3. Install plate (13) on damper body (14) with two new lockwashers (8) and screws (7).

e. Installation

1. Place new seal (2) on pulsation damper (3).
2. Install pulsation damper (3) on fuel pump (1) with two washers (4), new lockwashers (5), and screws (6).

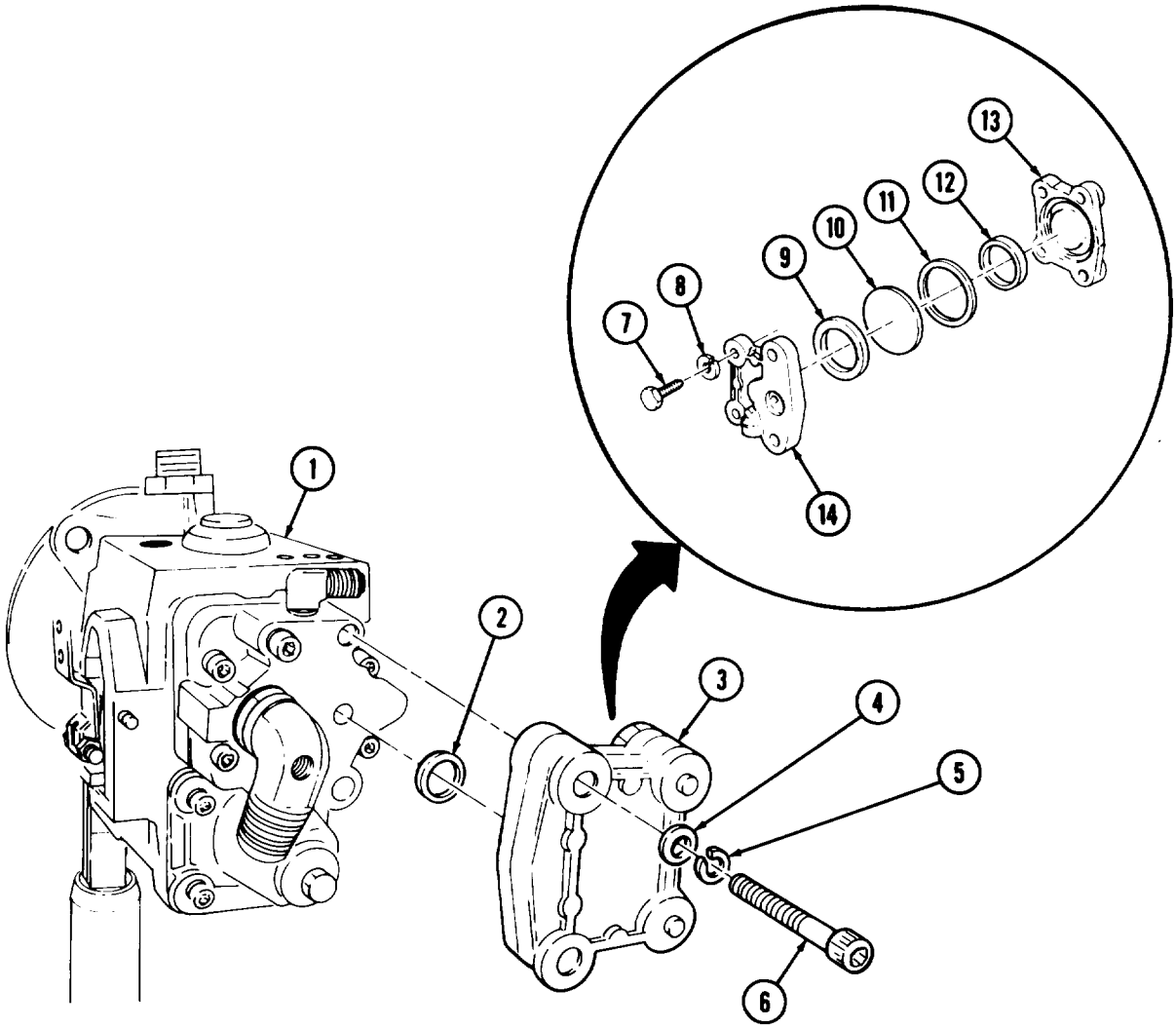

FOLLOW-ON TASK: Remove fuel pump from holding fixture (para. 5-14).

5-17. PRESSURE GEAR PUMP REPLACEMENT

THIS TASK COVERS:

a. Removal **b. Installation**

INITIAL SETUP

APPLICABLE MODELS
All

TOOLS
General mechanic's tool kit (Appendix B, Item 1)

MATERIALS/PARTS
Four lockwashers (Appendix D, Item 233)
Gasket (Appendix D, Item 121)
Packing (Appendix D, Item 307)

REFERENCES (TM)
TM 9-2320-260-34P-1

EQUIPMENT CONDITION
Pulsation damper removed (para. 5-16).

a Removal

1. Remove four screws (6), lockwashers (5), gear pump (3), and gasket (2) from fuel pump housing (1). Discard gasket (2) and lockwashers (5).
2. Remove elbow (4), elbow (7), and packing (8) from gear pump (3). Discard packing (8).

b. Installation

1. Install new packing (8), elbow (7), and elbow (4) on gear pump (3).
2. Install new gasket (2) and gear pump (3) on fuel pump housing (1) with four new lockwashers (5) and screws (6).

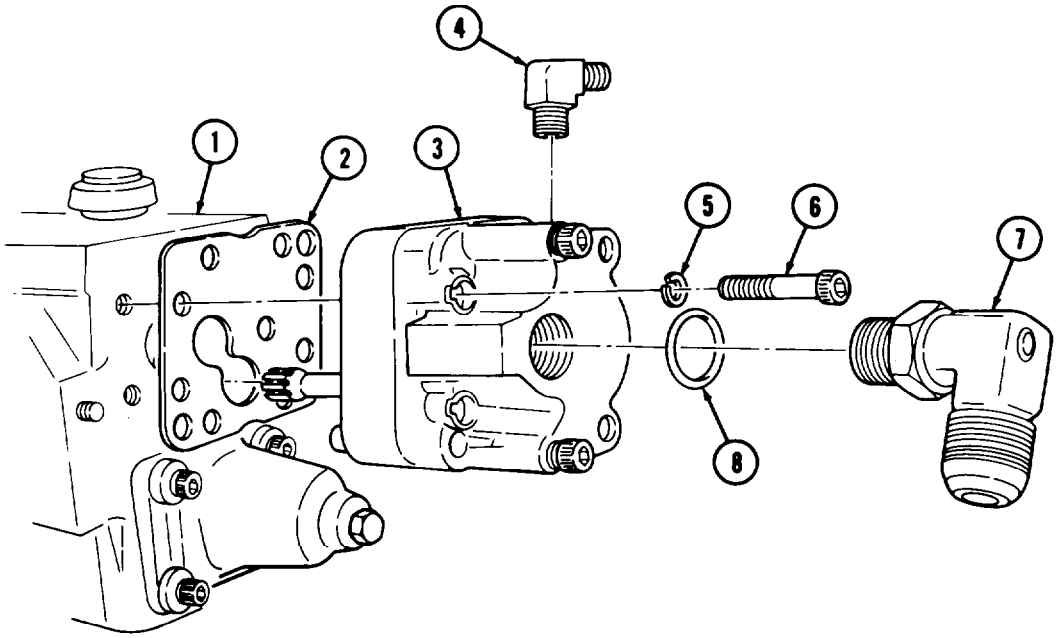

FOLLOW-ON TASK: Pulsation damper installed (para. 5-16).

5-18. FUEL PUMP SPRING PACK MAINTENANCE

THIS TASK COVERS:

a. Removal
b. Inspection
c. Installation

INITIAL SETUP

APPLICABLE MODELS
All

TOOLS
General mechanic's tool kit (Appendix B, Item 1)
Spring tester (Appendix B, Item 10)

MATERIALS/PARTS
Retaining ring (Appendix D, Item 339)
Gasket (Appendix D, Item 123)
Seal (Appendix D, Item 411)

REFERENCES (TM)
TM 9-2320-260-34P-1

EQUIPMENT CONDITION
Fuel pump mounted on holding fixture (para. 5-14).

NOTE

Spring packs are maintained basically the same for AFC and VS fuel pumps. This procedure covers the AFC fuel pump.

a. Removal

1. Remove seal (12) from governor adjusting screw (13) and throttle leakage adjusting screw (18). Discard seal (12).
2. Remove four screws (14), spring pack cover (15), and gasket (16) from fuel pump (1). Discard gasket (16).
3. Remove retaining ring (11), spring retainer (10), shim(s) (9), spring (8), spring guide (5), washer (4), spring (3), and plunger (2) from spring pack barrel (17). Discard retaining ring (11).
4. Remove adjusting screw (7) and spring(6) from spring guide (5).

b. Inspection

1. For general inspection procedures, refer to para. 2-9.
2. Inspect spring pack cover (15) for cracks, breaks, and stripped threads. Replace spring pack cover (15) if cracked, broken, or threads are stripped.
3. Using spring tester, inspect tension of spring (8). Replace spring (8) if tension is not within 0.69-0.85 lb (0.31-0.39 kg) when compressed 1.0 in. (25.4 mm).

5-18. FUEL PUMP SPRING PACK MAINTENANCE (Contd)

4. Using spring tester, inspect tension of spring (3). Replace spring (3) if tension is not within 16.02-17.78 lb (7.27-8.07 kg) when compressed 1.025 in. (26.0 mm).

c. Installation

1. Install spring (6) and adjusting screw (7) on spring guide (5).
2. Install plunger (2), spring (3), washer (4), spring guide (5), spring (8), shim(s) (9), and spring retainer (10) on spring pack barrel (17) with new retaining ring (11).
3. Install new gasket (16) and spring pack cover (15) on fuel pump (1) with four screws (14).

NOTE

Seal is not installed until fuel pump calibration (para. 5-25).

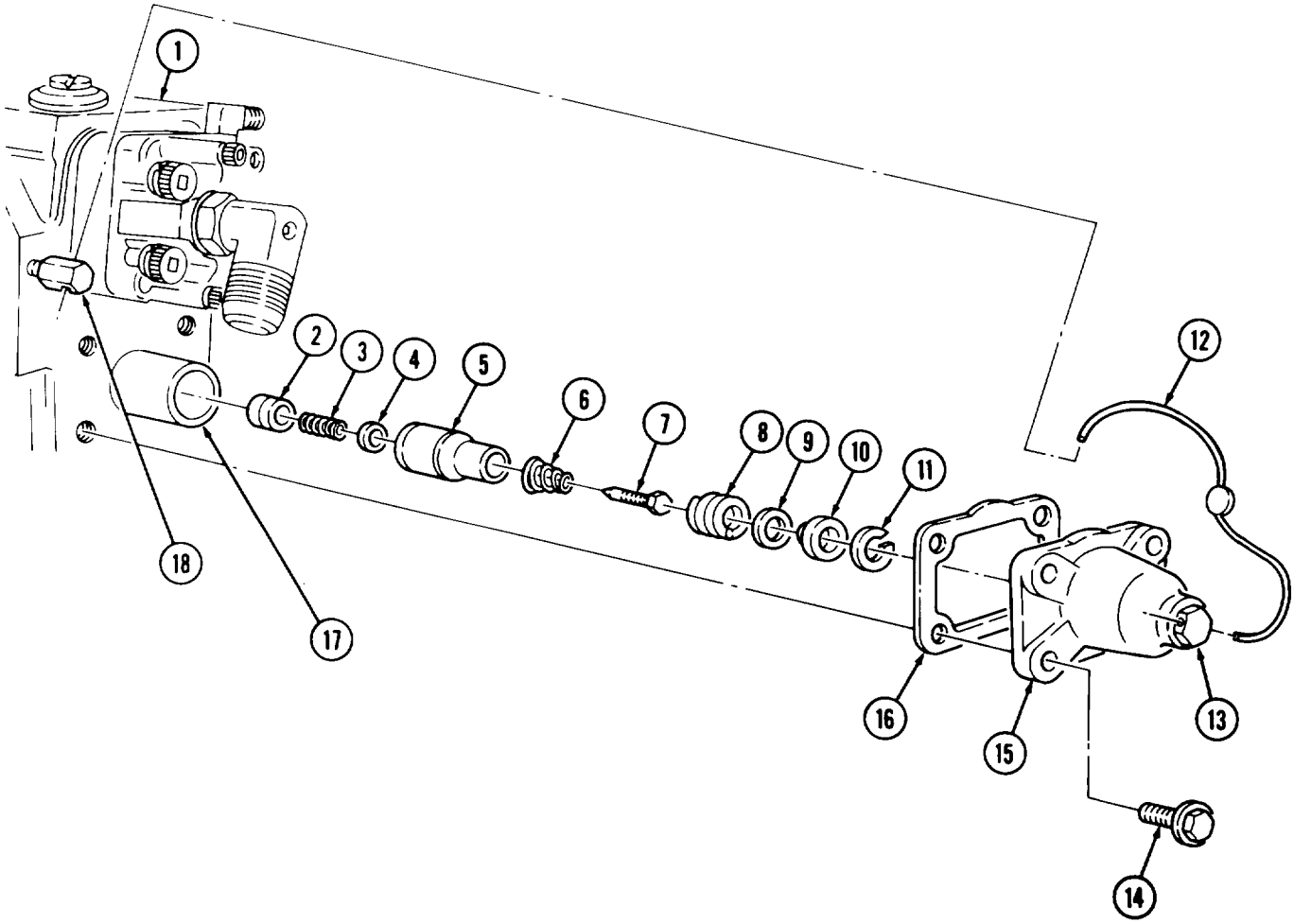

FOLLOW-ON TASKS:
- Remove fuel pump from holding fixture (para. 5-14).
- Calibrate fuel pump (para. 5-25).

5-19. UPPER SPRING PACK MAINTENANCE

THIS TASK COVERS:

a. Removal
b. Disassembly
c. Inspection
d. Assembly
e. Installation

INITIAL SETUP

APPLICABLE MODELS
M816, M819

TOOLS
General mechanic's tool kit (Appendix B, Item 1)
Inside caliper micrometer (Appendix B, Item 9)
Spring tester (Appendix B, Item 10)
Arbor press (Appendix B, Item 7)

MATERIALS/PARTS
O-ring (Appendix D, Item 284)
O-ring (Appendix D, Item 286)
Gasket (Appendix D, Item 123)
Retaining ring (Appendix D, Item 340)

REFERENCES (TM)
TM 9-2320-260-34P-1

EQUIPMENT CONDITION
Fuel pump mounted on holding fixture (para. 5-14).

a. Removal

1. Remove spring (16) from throttle lever (12) and bracket (2).
2. Remove four screws (14), washers (13), spring pack housing (11), and gasket (15) from fuel pump (1). Discard gasket (15).
3. Remove high-speed spring (8), shim(s) (9), and spring guide (10) from spring pack housing (11).
4. Remove retaining ring (7), spring seat (6), idle spring (5), and plunger (4) from governor barrel (3). Discard retaining ring (7).

b. Disassembly

NOTE

Mark throttle lever positions for installation.

1. Loosen two nuts (24) and screws (25) and remove throttle levers (12) and (29) from throttle lever shaft (23).
2. Remove setscrew (27) from throttle lever stop (28) and throttle lever shaft (23),
3. Remove throttle lever shaft (23) and throttle lever stop (28) from spring pack housing (11).
4. Remove two O-rings (26) from throttle lever shaft (23). Discard O-rings (26).
5. Remove safety wire (18) from two caps (17). Discard safety wire (18).
6. Remove two caps (17), washers (19), nuts (20), washers (21), and setscrews (22) from spring pack housing (11).

5-19. UPPER SPRING PACK MAINTENANCE (Contd)

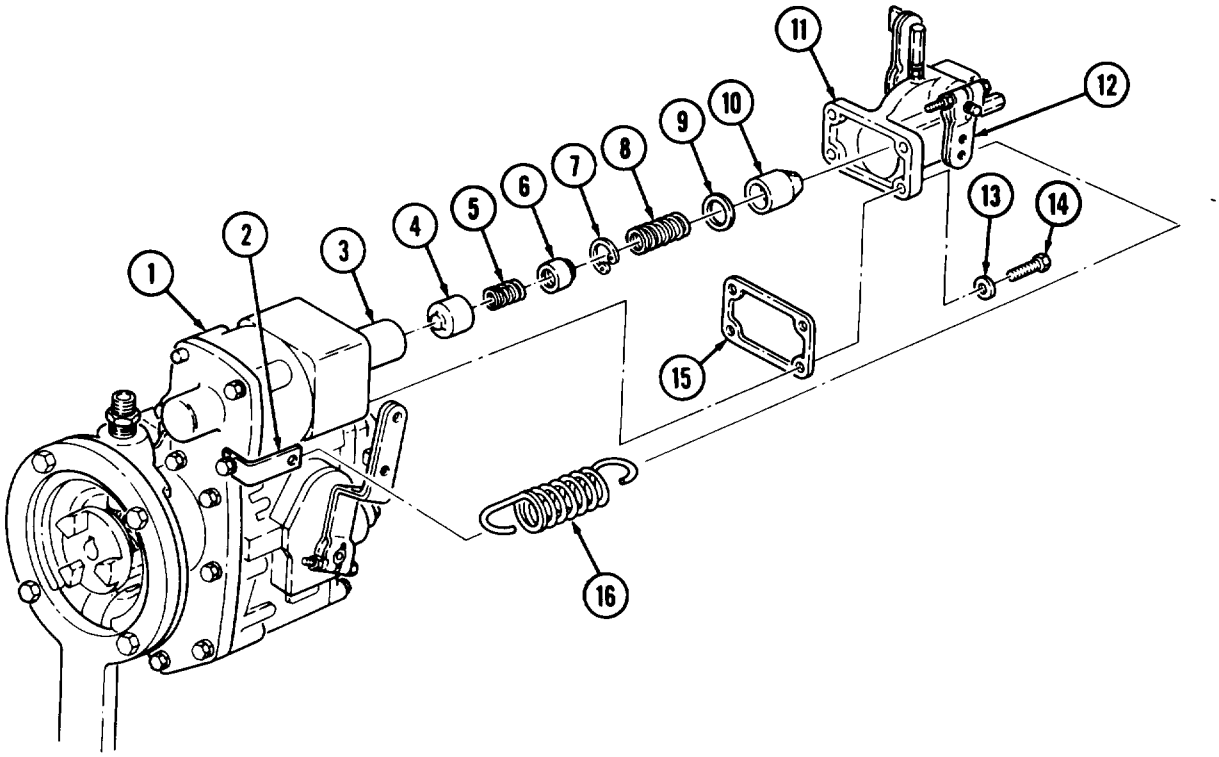

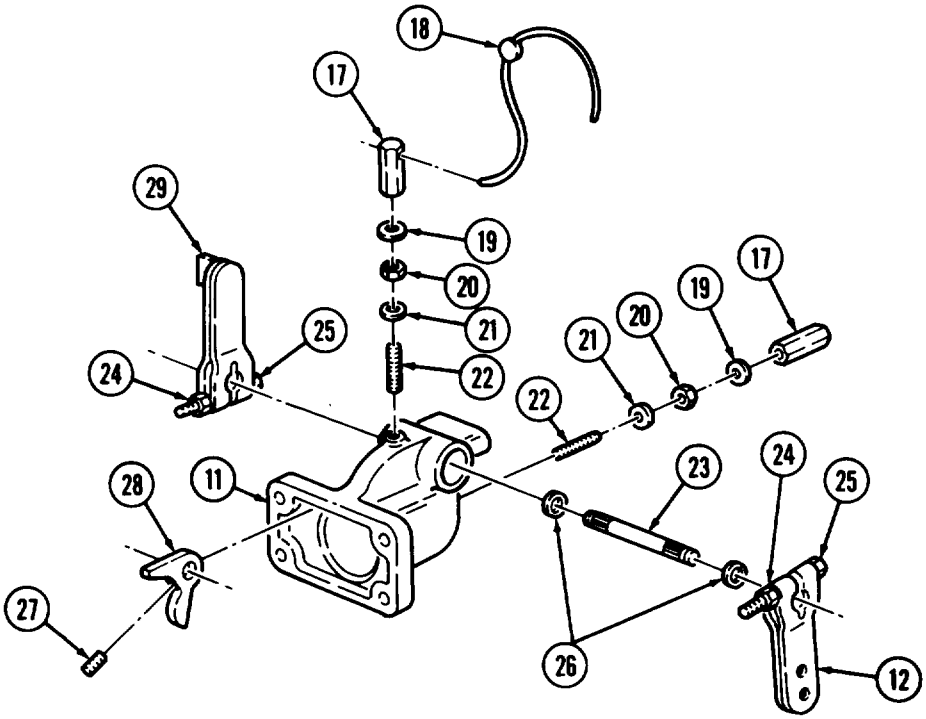

5-19. UPPER SPRING PACK MAINTENANCE (Contd)

c. Inspection

1. For general inspection procedures, refer to para. 2-9.
2. Inspect spring pack housing (13) for cracks, breaks, and wear. Replace spring pack housing (13) if cracked, broken, or worn.
3. Measure inside diameter of two spring pack housing bushings (12). Inside diameter should be 0.560-0.563 in. (14.22-14.30 mm). Replace spring pack housing bushings (12) if inside diameter exceed limits.

NOTE

Perform steps 4 and 5 if spring pack housing bushings require replacement.

4. Using arbor press, remove two spring pack housing bushings (12) from spring pack housing (13). Discard spring pack housing bushings (12).
5. Using arbor press, install two new spring pack housing bushings (12) on spring pack housing (13). Ensure spring pack housing bushings (12) are flush with surface of spring pack housing (13).
6. Using spring tester, check tension of high-speed spring (24). Spring tension should be 0.28-0.36 lb (0.13-0.16 kg) at 0.265 in. (6.731 mm). Replace high-speed spring (24) if tension is not within limits.
7. Using spring tester, check tension of idle spring (21). Spring tension should be 9.2-11.2 lb (4.17~5.08 kg at 1.12 in. (28.4 mm). Replace idle spring (21) if tension is not within limits.

d. Assembly

1. Install two setscrews (4), washers (3), nuts (2), washers (5), and caps (6) on spring pack housing (13).

NOTE

Safety wire is not installed until fuel pump calibration (para. 5-25).

2. Install two new O-rings (11) on throttle shaft (7).
3. Position throttle stop (14) in spring pack housing (13) and insert throttle shaft (7) through spring pack housing (13) and throttle stop (14).
4. Install setscrew (15) on throttle stop (14) and throttle shaft (7).
5. Install throttle levers (10) and (16) on throttle shaft (7) in marked positions. Tighten two nuts (8) and screws (9).

e. Installation

1. Install plunger (20), idle spring (21), and spring seat (22) in governor barrel (19) with new retaining ring (23).
2. Position spring guide (26), shim(s) (25), and high-speed spring (24) in spring pack housing (13).
3. Install new gasket (29) and spring pack housing (13) on fuel pump (17) with four washers (27) and screws (28).
4. Install spring (30) on throttle lever (10.) and bracket (18).

5-19. UPPER SPRING PACK MAINTENANCE (Contd)

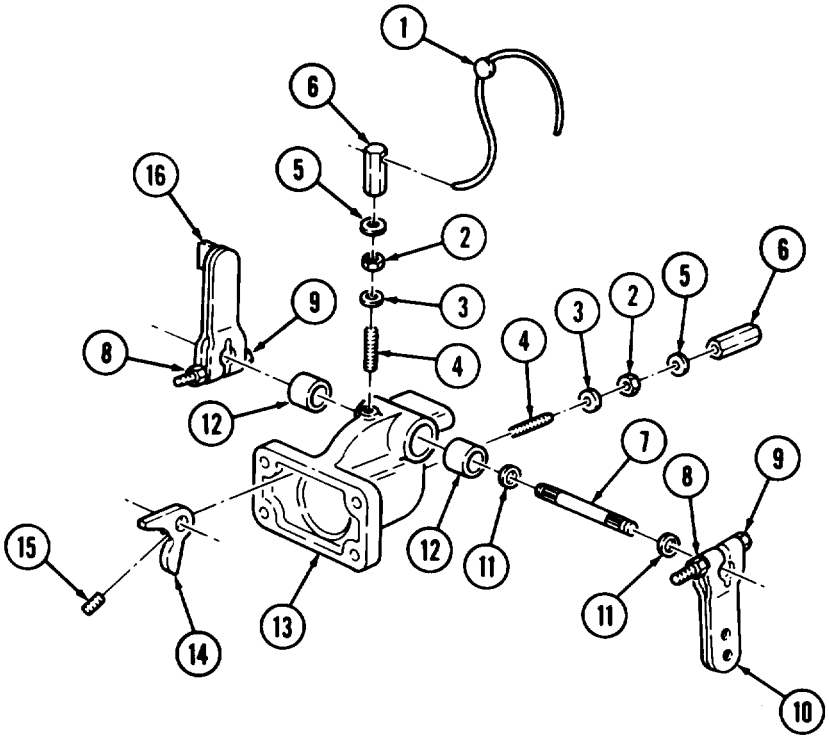

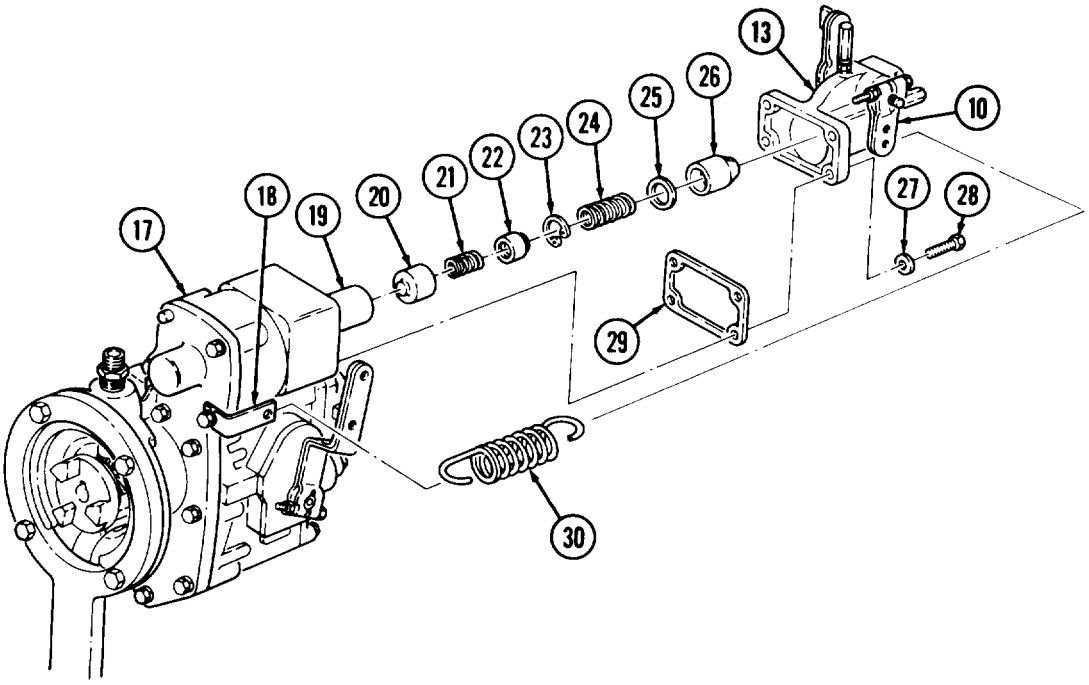

FOLLOW-ON TASKS: •Remove fuel pump from holding fixture (para. 5-14).
•Calibrate fuel pump (para. 5-25).

5-20. DAMPER MAINTENANCE

THIS TASK COVERS:

a. Removal
b. Disassembly
c. Assembly
d. Installation

INITIAL SETUP

APPLICABLE MODELS
M816, M819

TOOLS
General mechanic's tool kit (Appendix B, Item 1)

MATERIALS/PARTS
O-ring (Appendix D, Item 278)
O-ring (Appendix D, Item 280)
Disk (Appendix D, Item 55)
Four lockwashers (Appendix D, Item 233)
Lubricating oil (Appendix C, Item 20)

REFERENCES (TM)
TM 9-2320-260-10
TM 9-2320-260-34P-1

EQUIPMENT CONDITION
- Parking brake set (TM 9-2320-260-10).
- Hood raised and secured (TM 9-2320-260-10).

NOTE

Damper assembly is found on late model engine, serial number 10448850 and before, using MVS fuel pump.

a. Removal

1. Remove screw (6) from bracket (5) and fuel pump (1).
2. Rotate damper (4) to access screw (9).
3. Remove screw (9), lockwasher (8), washer (7), and bracket (5) from damper (4). Discard lockwasher (8).
4. Remove damper (4) from fuel pump (1).
5. Remove adapter (2) and elbow (3) from damper (4).

b. Disassembly

Remove three screws (11), lockwashers (12), washers (13), body (10), two O-rings (15), and disk (16) from access cover (14). Discard disk (16), O-rings (15), and lockwashers (12).

c. Assembly

1. Coat two new 0-rings (15) with lubricating oil and install in access cover (14) and body (10).
2. Install new disk (16) and access cover (14) on body (10) with three washers (13), new lockwashers (12), and screws (11).

5-20. DAMPER MAINTENANCE (Contd)

d. Installation

1. Install elbow (3) and adapter (2) on damper (4).
2. Install damper (4) on fuel pump (1).
3. Rotate damper (4) away from fuel pump (1) and install bracket (5) on damper (4) with washer (7), new lockwasher (8), and screw (9).
4. Install bracket (5) on fuel pump (1) with screw (6).

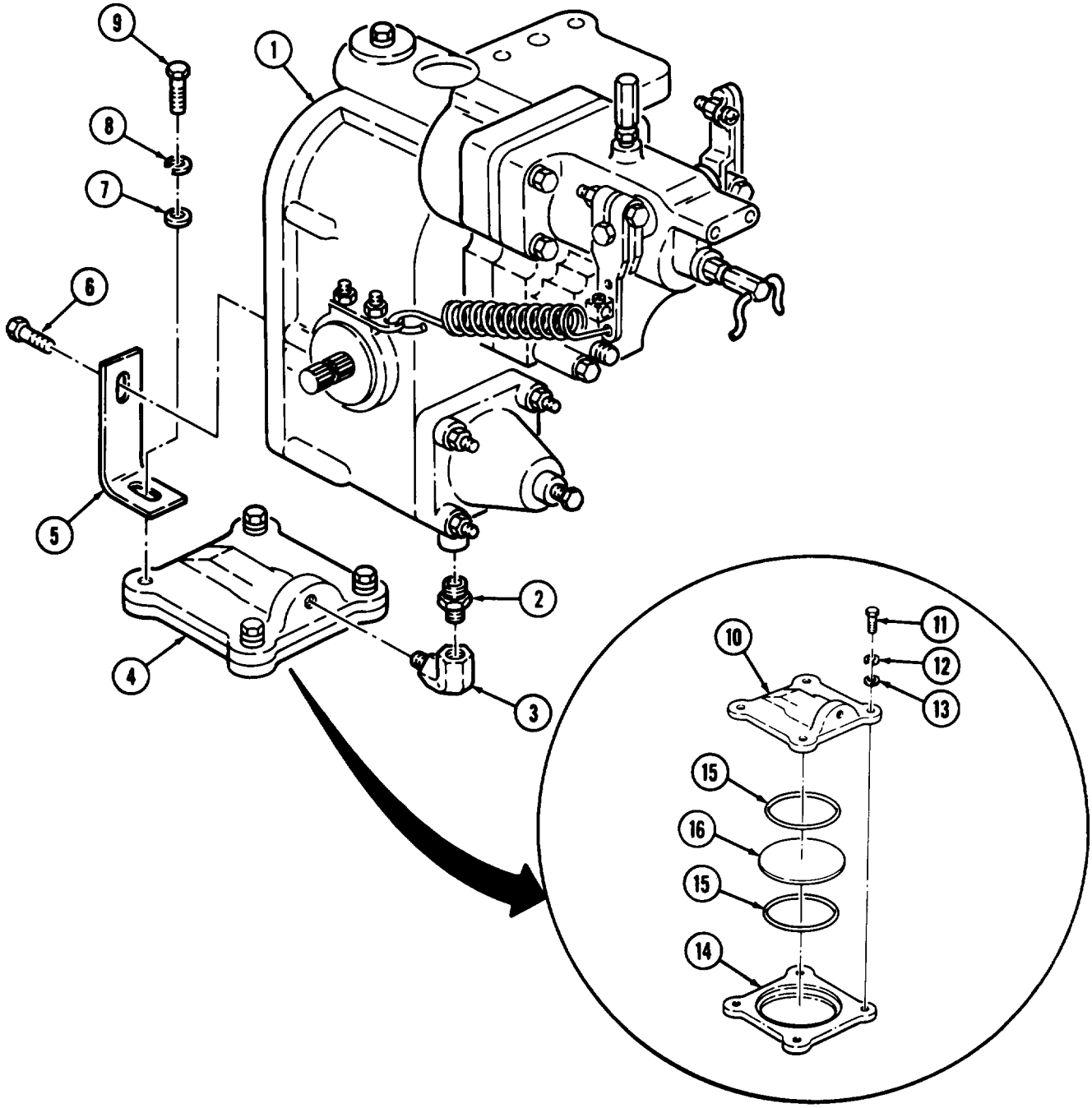

5-21. FUEL PUMP AIR CYLINDER MAINTENANCE

THIS TASK COVERS:

a. Removal
b. Installation
c. Adjustment

INITIAL SETUP

APPLICABLE MODELS
M816, M819

TOOLS
General mechanic's tool kit (Appendix B, Item 1)

MATERIALS/PARTS
Two lockwashers (Appendix D, Item 225)
Antiseize tape (Appendix C, Item 50)

REFERENCES (TM)
TM 9-2320-260-10
TM 9-2320-260-34P-1

EQUIPMENT CONDITION
- Parking brake set (TM 9-2320-260-10).
- Hood raised and secured (TM 9-2320-260-10).
- Air reservoirs drained (TM 9-2320-260-10).

GENERAL SAFETY INSTRUCTIONS
- Do not disconnect air line before draining air reservoirs.
- Hearing protection must be worn when performing this task.

a. Removal

WARNING

Do not disconnect air line before draining air reservoirs. Small parts under pressure may shoot out with high velocity, causing injury to personnel.

1. Remove air line (4) and adapter (3) from air cylinder (2).
2. Remove nut (1) and air cylinder (2) from bracket (7).
3. Remove two screws (5), lockwashers (6), and bracket (7) from fuel pump (8). Discard lockwashers (6).

b. Installation

1. Install bracket (7) on fuel pump (8) with two new lockwashers (6) and screws (5).
2. Install air cylinder (2) on bracket (7) with nut (1).
3. Apply antiseize tape to male threads of adapter (3) and air line (4) and install adapter (3) and air line (4) on air cylinder (2)

c. Adjustment

WARNING

Hearing protection must be worn by mechanic when engine is running. Noise levels produced by this vehicle exceed 85dB, which may cause injury to personnel.

1. Start engine (TM 9-2320-260-10) and allow air system to reach normal operating pressure.

NOTE

Perform step 2 for M816 wrecker truck.

2. Engage crane drive control lever (TM 9-2320-260-10).
3. Engage transfer power takeoff lever (TM 9-2320-260-10).

5-21. FUEL PUMP AIR CYLINDER MAINTENANCE (Contd)

4. Remove spring (15) from throttle lever (13) and bracket (14).
5. Loosen nut (9) and adjusting screw (10).
6. Place throttle lever (11) forward in full throttle position and hold. Turn adjusting screw (10) until it touches air cylinder piston shaft (12).
7. Release throttle lever (11), hold adjusting screw (10), and tighten nut (9).
8. Install spring (15) on throttle lever (13) and bracket (14).
9. Disengage transfer power takeoff lever (TM 9-2320-260-10).

NOTE

Perform step 10 for M816 wrecker truck.

10. Disengage crane drive control lever (TM 9-2320-260-10).

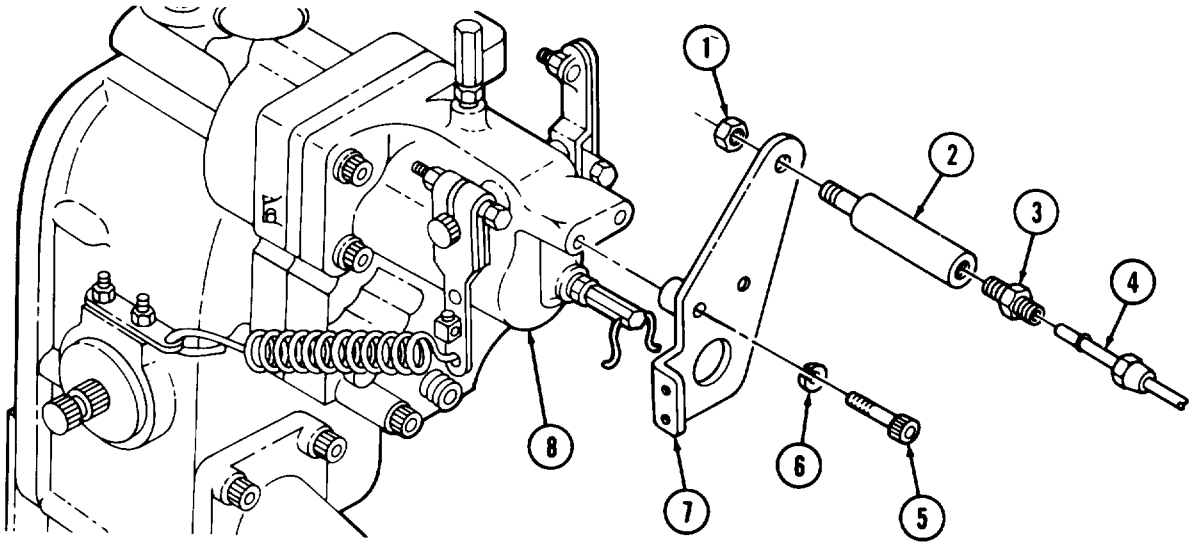

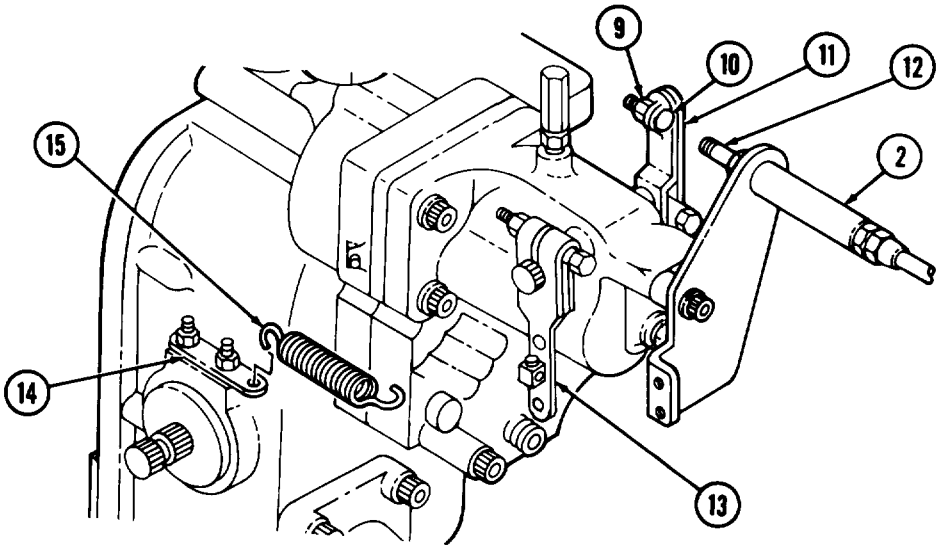

5-22. FUEL PUMP GOVERNOR REPLACEMENT

THIS TASK COVERS:

a. Removal **b. Installation**

INITIAL SETUP

APPLICABLE MODELS
M816, M819

TOOLS
General mechanic's tool kit
(Appendix B, Item 1)

MATERIALS/PARTS
Filter kit (Appendix D, Item 335)
Gasket (Appendix D, Item 124)
Seal (Appendix D, Item 424)
Seal (Appendix D, Item 426)

MATERIAIS/PARTS (Contd)
O-ring (Appendix D, Item 288)
Two lockwashers (Appendix D, Item 233)
O-ring (Appendix D, Item 276)

REFERENCES (TM)
TM 9-2320-260-34P-1

EQUIPMENT CONDITION
Fuel pump removed (para. 5-13).

a. Removal

1. Remove two screws (4), lockwashers (3), washers (2), shutoff valve (5), and O-ring (6) from governor (7). Discard O-ring (6) and lockwashers (3).
2. Remove filter cap (1), gasket (17), spring (16), filter (15), O-ring (14), retainer (13), and filter screen (12) from fuel pump (9) and governor (7). Discard filter cap (1), gasket (17), spring (16), filter (15), O-ring (14), retainer (13), and filter screen (12).
3. Remove spring (11) from throttle lever (8) and bracket (10).
4. Remove screw (18), seal (26), governor (7), and seal (22) from fuel pump (9). Discard seals (22) and (26).

NOTE

Perform step 5 if adapter is damaged.

5. Remove adapter (23), gasket (24), and O-ring (25) from governor (7). Discard gasket (24) and O-ring (25).

NOTE

Mark throttle lever positions for installation.

6. Loosen two nuts (19), screws (21) and remove throttle levers (8) and (20) from governor (7).

5-22. FUEL PUMP GOVERNOR REPLACEMENT (Contd)

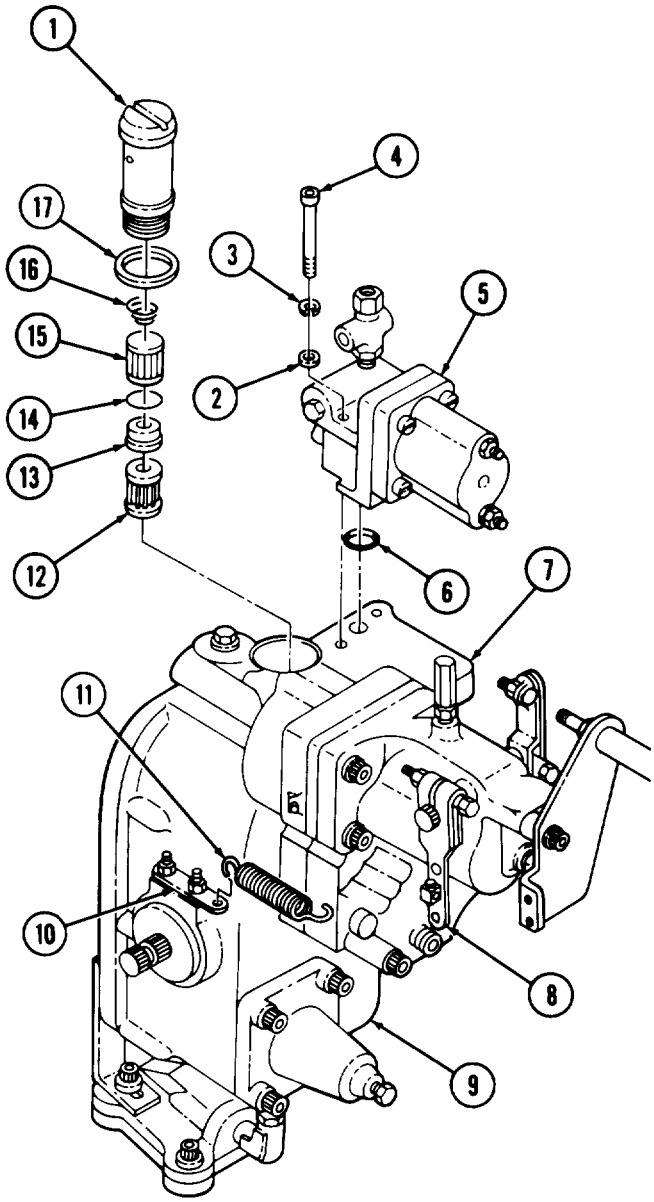

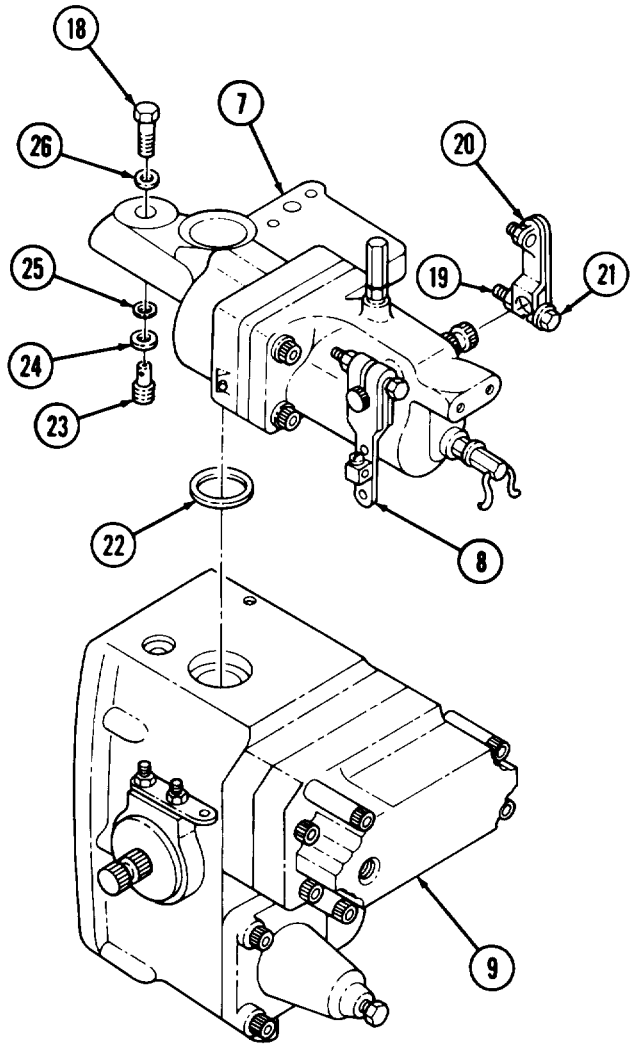

5-22. FUEL PUMP GOVERNOR REPLACEMENT (Contd)

b. Installation

1. Install throttle levers (5) and (7) on governor (3) in marked positions. Tighten nuts (4) and screws (6).

NOTE

Perform step 2 if adapter was removed.

2. Position new gasket (11) and O-ring (12) on adapter (10) and install on governor (3).
3. Position new seal (9) and governor (3) on fuel pump (8) and install with new seal (2) and screw (1).
4. Install spring (20) on throttle lever (7) and bracket (19).
5. Install new filter screen (21), retainer (22), O-ring (23), filter (24), spring (25), gasket (26), and filter cap (13) on governor (3) and fuel pump (8).
6. Install new O-ring (18) and shutoff valve (17) on governor (3) with two washers (14), new lock-washers (15), and screws (16).

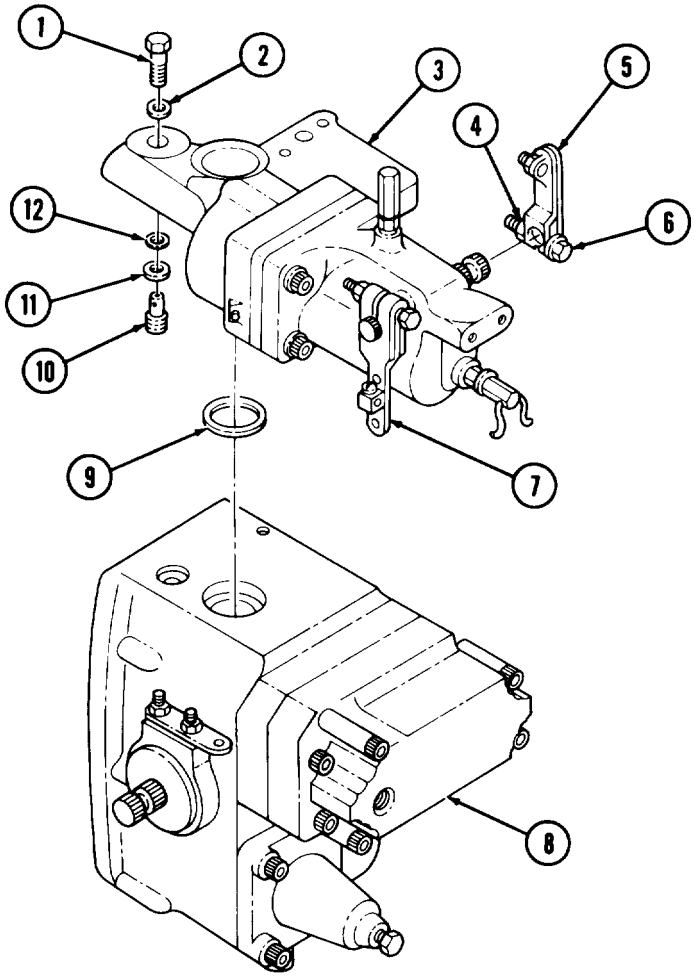

5-22. FUEL PUMP GOVERNOR REPLACEMENT (Contd)

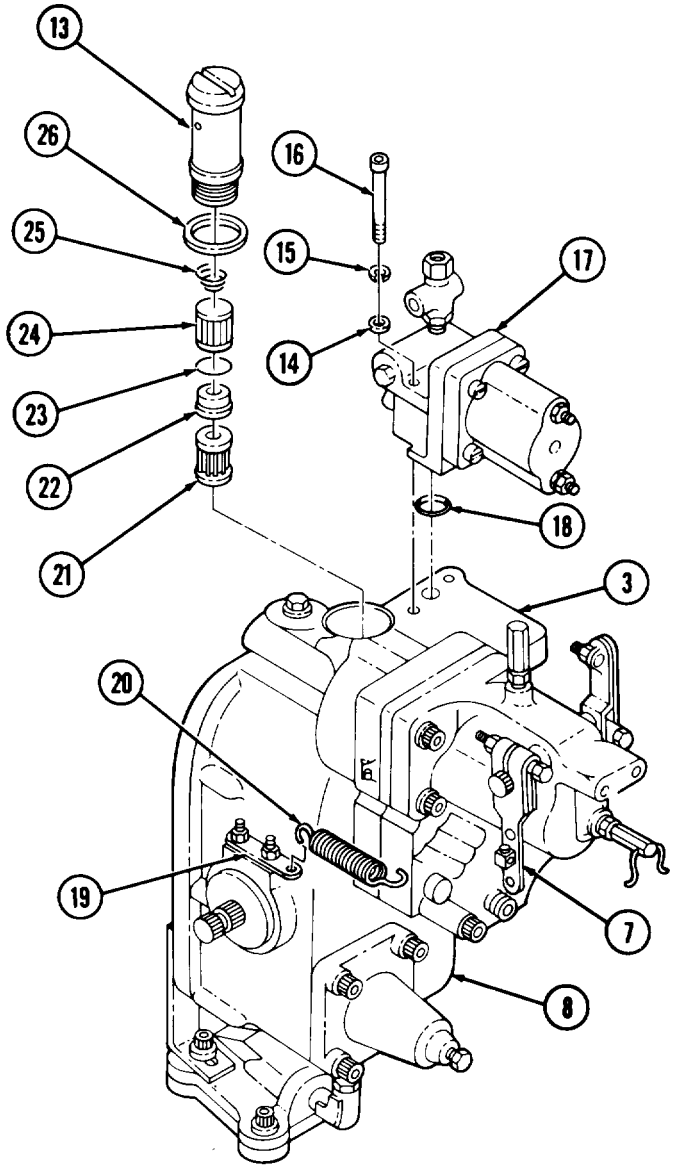

FOLLOW-ON TASK: Install fuel pump (para. 5-13).

5-23. FUEL PUMP HOUSING MAINTENANCE

THIS TASK COVERS:

a. Removal
b. Disassembly
c. Inspection
d. Assembly
e. Installation

INITIAL SETUP

APPLICABLE MODELS
All

TOOLS
General mechanic's tool kit (Appendix B, Item 1)
Electric drill (Appendix B, Item 64)
Torque wrench, 3/8-in. dr. (Appendix B, Item 4)
1/4-in. dia. drill bit (Appendix B, Item 63)

MATERIALS/PARTS
Lockwasher (Appendix D. Item 225)
Gasket (Appendix D, Item 125)
Lockwasher (Appendix D, Item 233)
Retaining ring (Appendix D, Item 341)
O-ring (Appendix D, Item 290)
O-ring (Appendix D, Item 292)
O-ring (Appendix D, Item 294)

MATERIALS/PARTS (Contd
Seal (Appendix D, Item 426)
Filter element (Appendix D, Item 57)
Lubricating oil (Appendix C, Item 21)

REFERENCES (TM)
TM 9-2320-260-20
TM 9-2320-260-34P-1

EQUIPMENT CONDITION
- Fuel pump mounted on holding fixture (para. 5-14).
- Shutoff valve removed (para. 5-15).
- Gear pump removed (para. 5-17).
- Spring pack removed (para. 5-18).
- Upper spring pack removed, if so equipped (para. 5-19).
- Fuel pump governor removed, if so equipped (para. 5-22).

NOTE

AFC, VS, MVS fuel pump housings are maintained basically the same. This procedure covers the AFC fuel pump.

a. Removal

1. Remove screw (8), lockwasher (7), and washer (6) from front cover (3) and housing (5). Discard lockwasher (7).
2. Remove six screws (1), washers (2), housing (5), and gasket (4) from front cover (3). Discard gasket (4).

b. Disassembly

1. Remove plug (9) from housing (5).
2. Remove cap (10), seal (11), spring (12), and filter element (13) from housing (5). Discard seal (11) and filter element (13).
3. Remove nut (21), lockwasher (20), washer (19), screw (23), washer (22), and throttle lever (18) from throttle shaft (16). Discard lockwasher (20).
4. Remove two drive pins (24) and throttle shaft cover (17) from housing (5). Discard drive pins (24).
5. Remove retaining ring (26) and throttle shaft (16) from housing (5).
6. Remove O-ring (25) from throttle shaft (16). Discard O-ring (25).
7. Remove plug (15) and O-ring (14) from housing (5). Discard O-ring (14).

5-23. FUEL PUMP HOUSING MAINTENANCE (Contd)

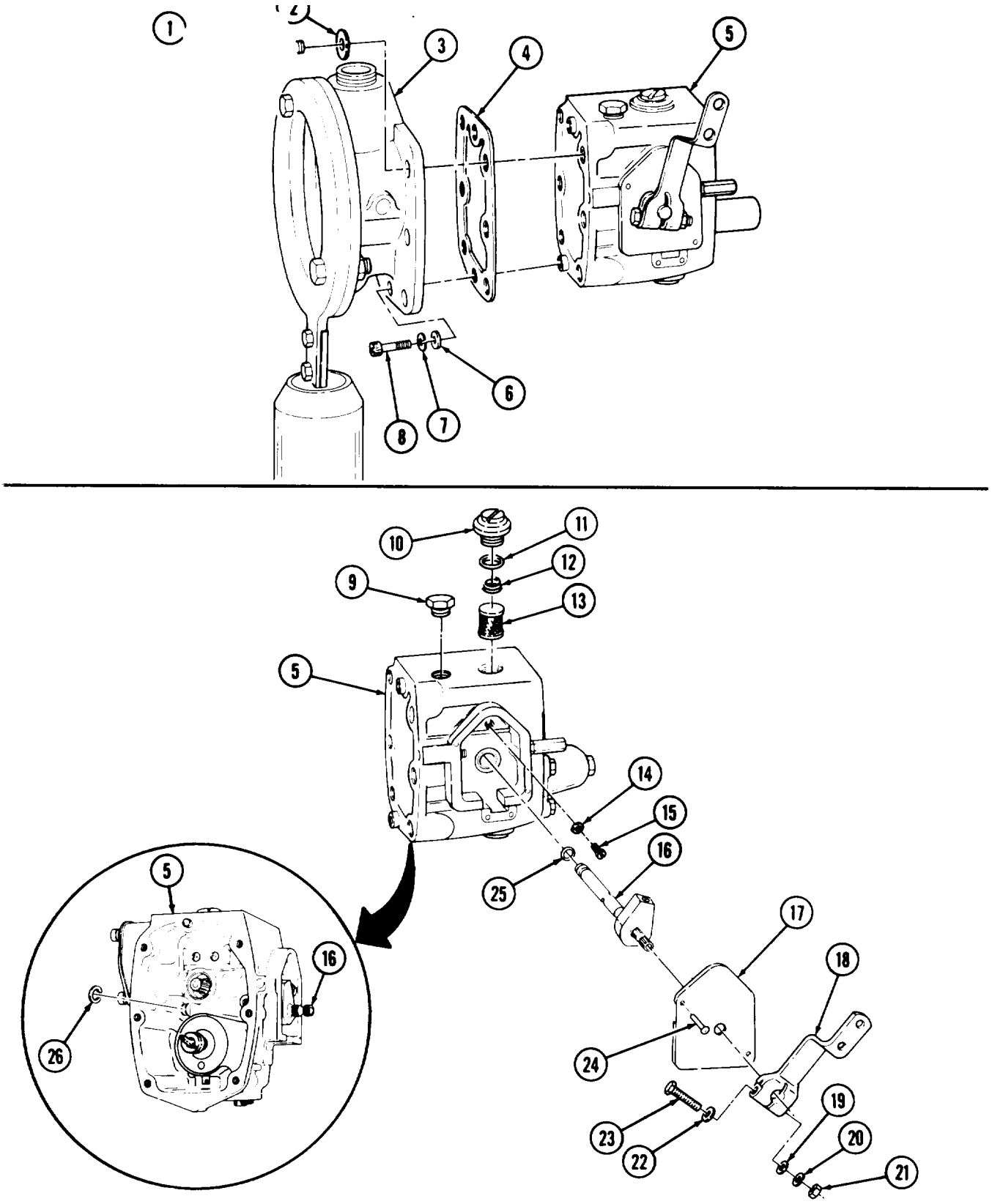

5-23. FUEL PUMP HOUSING MAINTENANCE (Contd)

8. Remove two setscrews (2) and throttle stop (3) from throttle shaft (1).

NOTE

Perform steps 9 through 11 if inspection or calibration of fuel pump requires the replacement of throttle adjustment screw.

9. Using 0.25 in. (6.35 mm) drill bit, remove ball bearing(6) from throttle shaft (1). Discard ball bearing (6).
10. Remove throttle adjustment screw (5) from throttle shaft (1).
11. Remove O-ring (4) from throttle adjustment screw (5). Discard O-ring (4).

c. Inspection

1. Inspect housing (7) for cracks and breaks. Replace housing (7) if cracked or broken.
2. Inspect governor barrel (8) for scratches and nicks. Replace housing (7) if governor barrel (8) is scratched or nicked.
3. Inspect throttle shaft (1) for nicks, burrs, scores, and damaged threads. Replace throttle shaft (1) if nicked, burred, scored, or threads are damaged.

d. Assembly

NOTE

- Perform steps 1 and 2 if throttle adjustment screw was removed.
- During assembly of fuel pump, the ball bearing or throttle shaft cover is installed after fuel pump is calibrated.

1. Apply lubricating oil to new O-ring (4) and install on throttle adjustment screw (5).
2. Install throttle adjustment screw (5) on throttle shaft (1). Turn throttle adjustment screw (5) six turns.
3. Install throttle stop (3) on throttle shaft (1) with two setscrews (2). tighten each setscrew (2) 70-90 lb-in. (8-10 N•m).

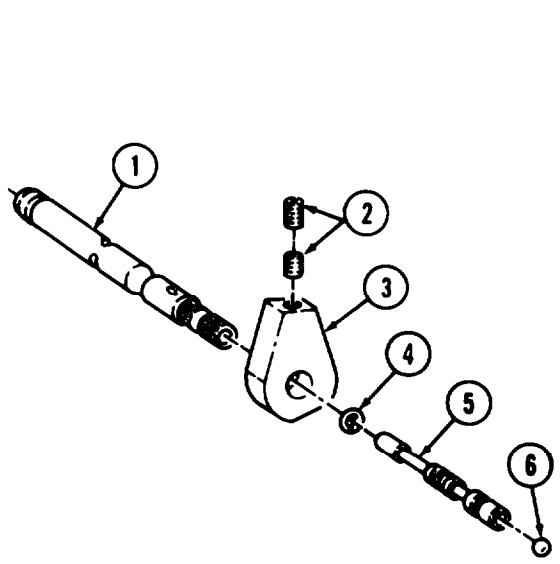

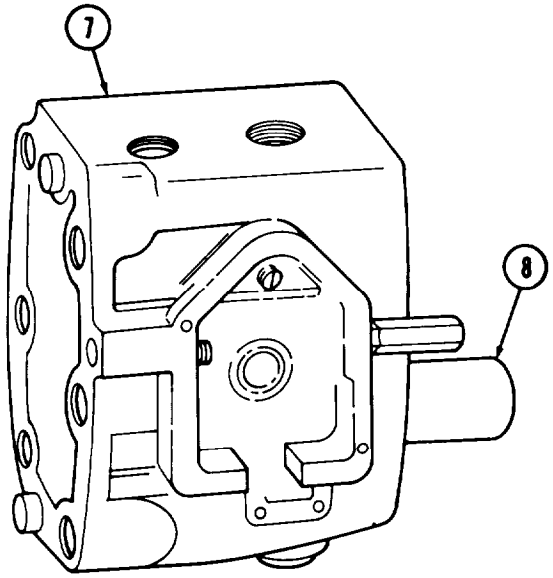

5-23. FUEL PUMP HOUSING MAINTENANCE (Contd)

4. Install new O-ring (13) and plug (14) on housing (7).
5. Apply lubricating oil on new O-ring (21) and install on throttle shaft (1).
6. Install throttle shaft (1) on housing (7) with retaining ring (23).
7. Install throttle lever (15) on throttle shaft. (1) with washer (19), screw (20), washer (16), new lockwasher (17), and nut (18).
8. Install new filter element (12) and spring (11) on housing (7) with new seal (10) and cap (9).
9. Install plug (22) on housing (7).

e. Installation

1. Position new gasket (27) and housing (7) on front cover (26) with washer (28), new lockwasher (29), and screw (30).
2. Install six washers (25) and screws (24) on front cover (26) and housing (7).

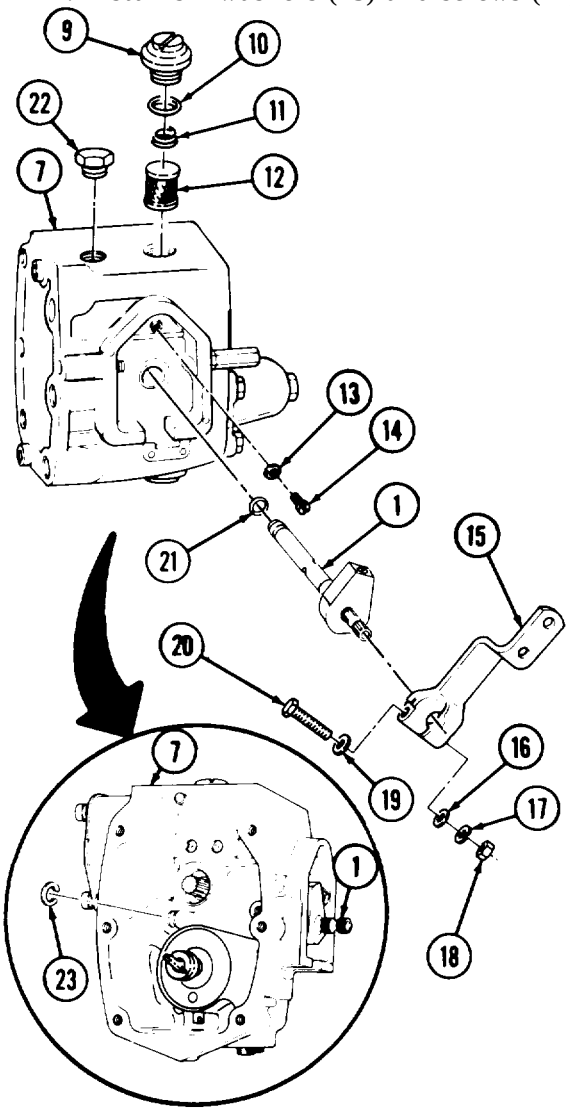

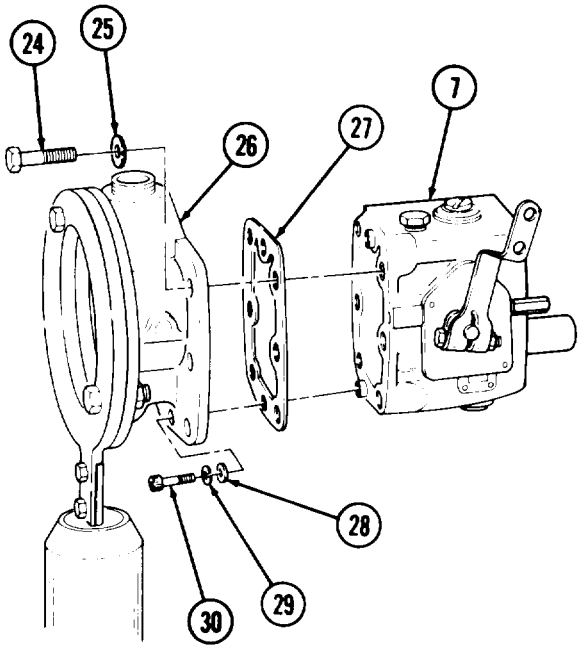

FOLLOW-ON TASKS: • Remove fuel pump from holding fixture (para, 5-14).
• Calibrate fuel pump (para. 5-25).

5-24. FUEL PUMP FRONT COVER MAINTENANCE

THIS TASK COVERS:

a. Removal
b. Inspection
c. Installation

INITIAL SETUP

APPLICABLE MODELS
All

TOOLS
General mechanic's tool kit (Appendix B, Item 1)
Inside micrometer (Appendix B, Item 9)

MATERIALS/PARTS
Lockwasher (Appendix D, Item 233)
Gasket (Appendix D, Item 125)

REFERENCES (TM)
TM 9-2320-260-34P-1

EQUIPMENT CONDITION
Fuel pump mounted to holding fixture (para. 5-14).

NOTE

AFC, VS, and MVS type fuel pump front covers are maintained basically the same. This procedure is for the AFC fuel pump.

a. Removal

1. Remove screw (8), lockwasher (7), washer (6), six screws (1), washers (2), housing (5), and gasket (4) from front cover (3). Discard gasket (4) and lockwasher (7).
2. Remove weight assist plunger (11), shim(s) (12), and spring (13) from weight carrier (14).
3. Remove weight carrier (14) from front cover (3).

b. Inspection

1. Inspect front cover (3) for breaks and cracks. Replace front cover (3) if broken or cracked.
2. Inspect idler (15) and drive (9) gears for chips, breaks, and wear. Replace front cover (3) if damaged.
3. Inspect weight carrier shaft bushing(s) (10) for nicks, burrs, scoring, and wear. Measure inside diameter of weight carrier shaft bushing(s) (10). Replace front cover (3) if weight carrier shaft bushing(s) (10) is damaged or inside diameter exceeds 0.504 in. (12.80 mm).

c. Installation

1. Install weight carrier (14) on front cover (3).
2. Install spring (13), shim(s) (12), and weight assist plunger (11) on weight carrier (14).
3. Install new gasket (4) and housing (5) on front cover (3) with washer (6), new lockwasher (7), screw (8), six washers (2), and screws (1).

5-24. FUEL PUMP FRONT COVER MAINTENANCE (Contd)

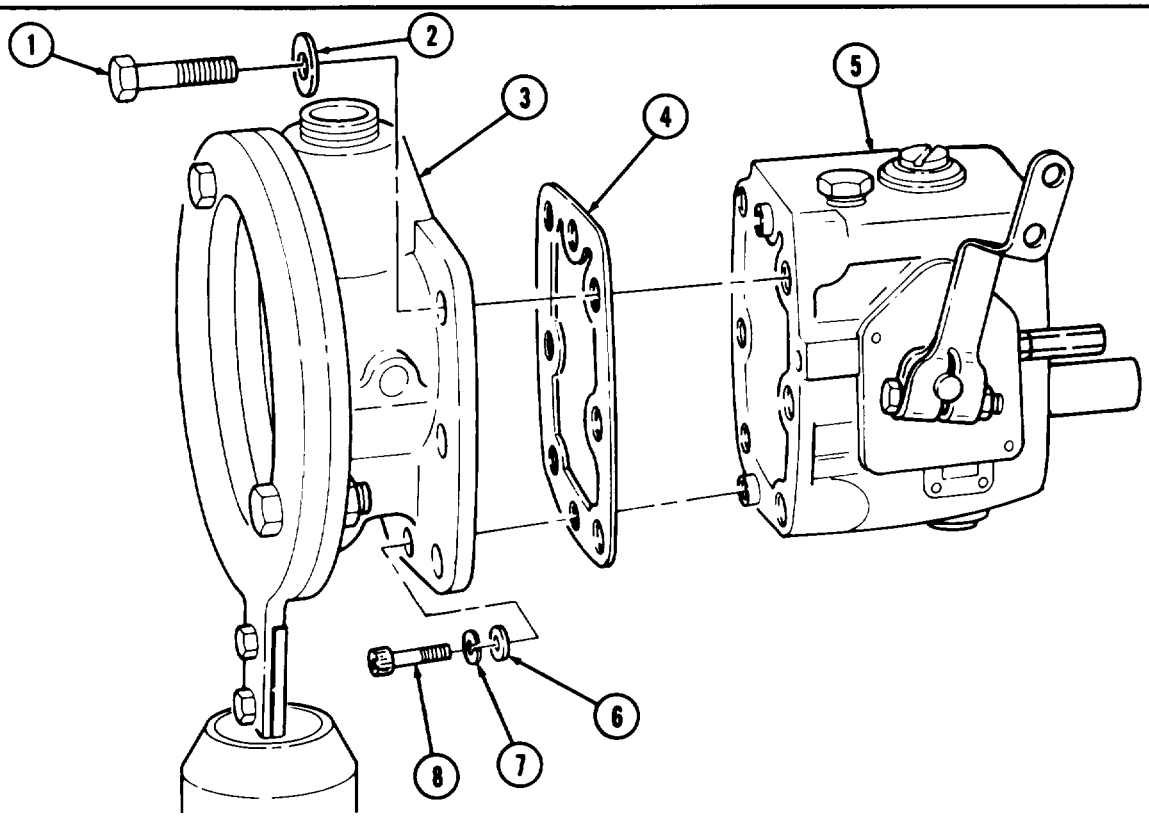

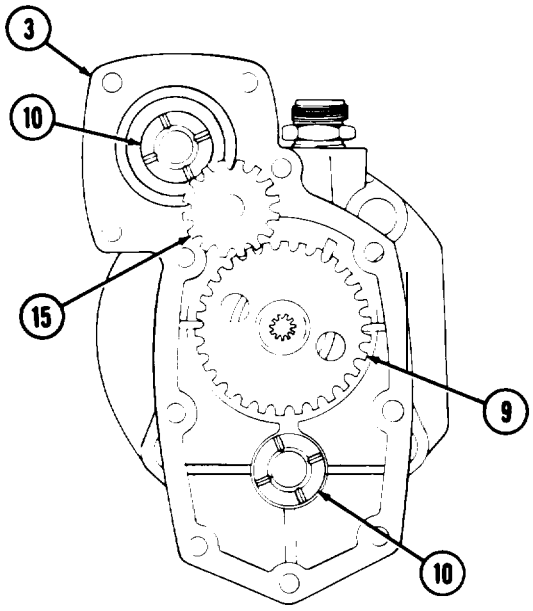

VS FUEL PUMP (M816, M819)

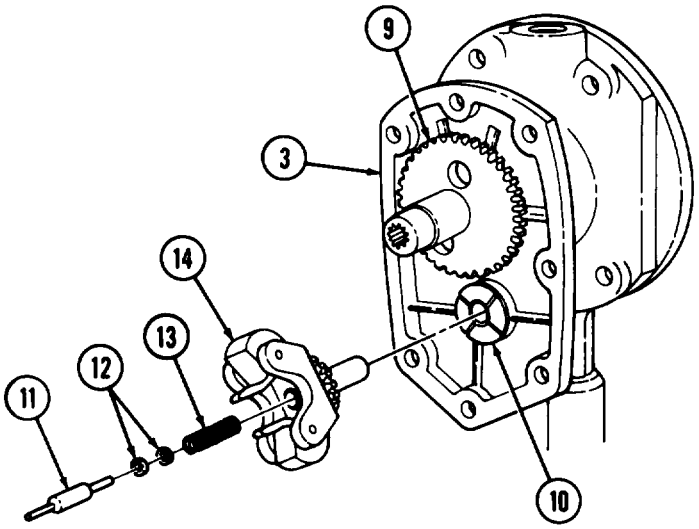

FOLLOW-ON TASKS: •Remove fuel pump from holding fixture (para. 5-14).
•Calibrate fuel pump (para. 5-25).

5-25. FUEL PUMP CALIBRATION

THIS TASK COVERS:

a. Throttle Shaft Cover Removal
b. Mounting Pump to Test Stand
c. Fuel Pump Run-In
d. Testing Pump Seals for Leaks
e. Testing Governor Cutoff RPM
f. Testing and Adjusting Throttle Leakage
g. Testing and Adjusting Idle Speed
h. Checking and Adjusting Throttle Lever Travel
i. Testing and Adjusting Pump Main Pressure
j Testing and Adjusting Fuel Pressure
k. Testing and Adjusting Governor Fuel Pressure
l. Checking and Adjusting Governor Weight Pressure
m. Testing and Adjusting Idle Speed (VS Governor Only)
n. Shutdown and Removal from Test Stand

INITIAL SETUP

APPLICABLE MODELS
All

SPECIAL TOOLS
Spring pack adjusting tool (Appendix B, Item 100)
Travel template (Appendix B, Item 101)
Shaft installation tool (Appendix B, Item 104)
Gear pump block plate (Appendix B, Item 103)

TOOLS
General mechanic's tool kit (Appendix B, Item 1)

TEST EQUIPMENT
Fuel injection pump tester stand (Appendix B, Item 88)

MATERIALS/PARTS
Ball bearing (Appendix D, Item 3)
Two screws (Appendix D, Item 378)
Lockwasher (Appendix D, Item 225)
GAA grease (Appendix C, Item 14)
Lubricating oil (Appendix C, Item 21)
Calibrating oil (Appendix C, Item 5)
Antiseize tape (Appendix C, Item 50)

REFERENCES (TM)
TM 9-2320-260-34P-1

EQUIPMENT CONDITION
- Fuel pump removed (para. 5-13).
- Manual fuel pump shutoff valve removed (para. 5-15).

a. Throttle Shaft Cover Removal

1. Remove nut (7), lockwasher (6), washer (5), screw (9), washer (8), and lever (4) from accelerator shaft (2). Discard lockwasher (6).

NOTE

Perform step 2 if throttle shaft cover has not been removed.

2. Remove two drive pins (10) and cover (3) from fuel pump (1). Discard drive pins (10).

b. Mounting Pump to Test Stand

1. Install adapter ring (14) on adapter bracket (13) with four washers (12) and screws (11).
2. Install adapter bracket (13) on test stand (20) with clamp bar (18).
3. Install fuel pump (1) on adapter bracket (13) and adapter ring (14) with four washers (17) and screws (16).
4. Position coupling drive (19) in test stand drive coupling (15).
5. Slide fuel pump (1) forward to engage coupling drive (19) with test stand drive coupling (15) on test stand (20).

5-25. FUEL PUMP CALIBRATION (Contd)

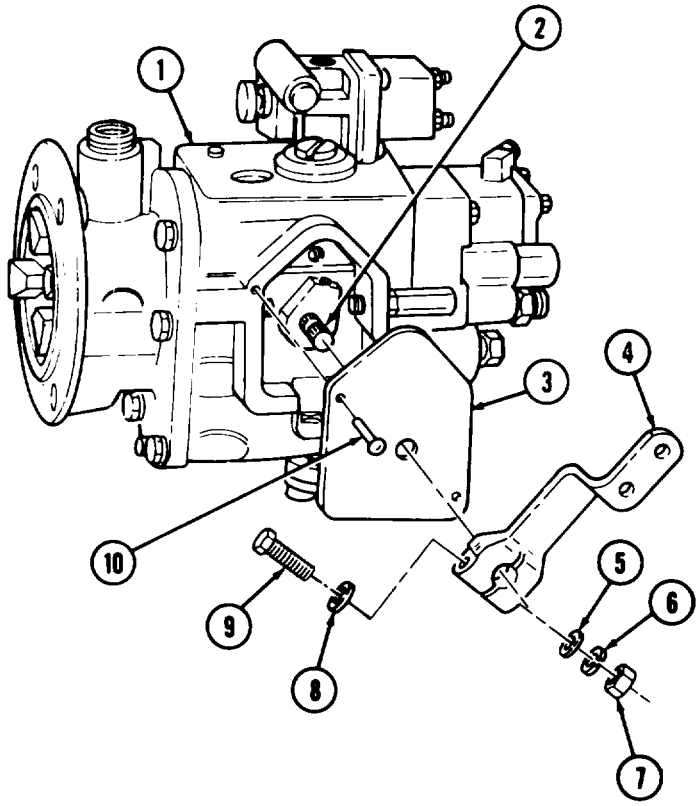

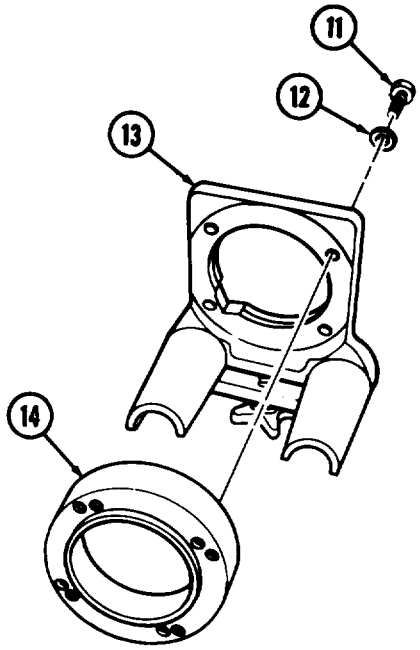

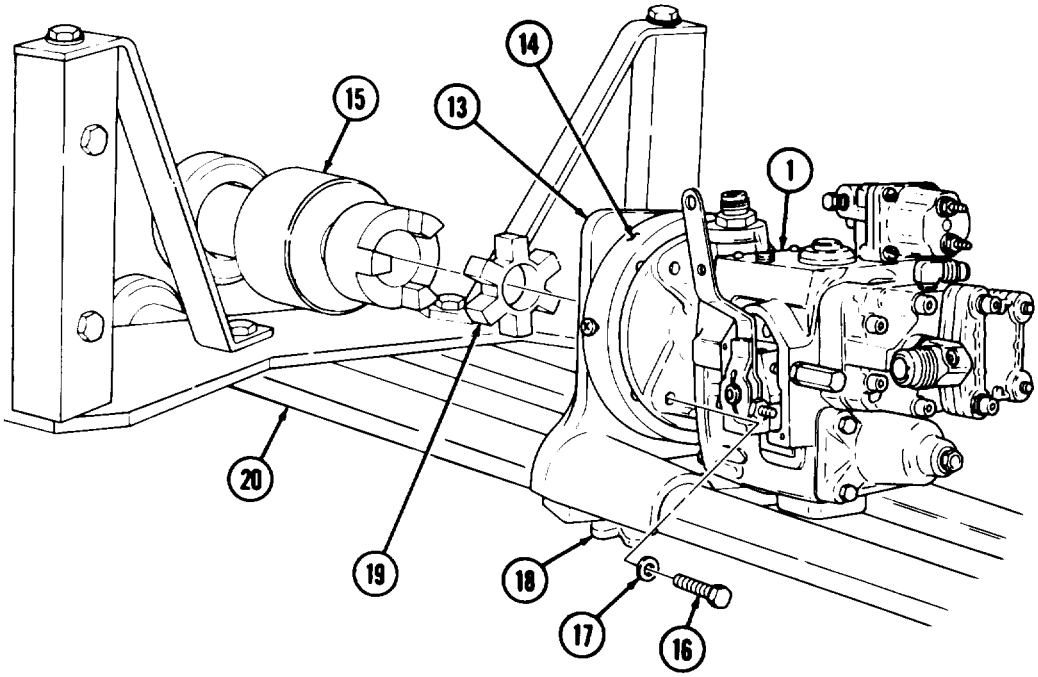

5-25. FUEL PUMP CALIBRATION (Contd)

NOTE

Clean all male pipe threads and wrap with antiseize tape before installation.

6. Install inlet adapter (12) on fuel pump elbow (11).
7. Install 0.5 in. (12.7 mm) flexible hose (15) from control valve (17) to adapter (12).
8. Connect 0.25 in. (6.35 mm) manifold hose (6) to vacuum adapter (13) and adapter (5).
9. Install discharge fitting (2) on shutoff solenoid valve (3).
10. Install fuel pressure hose (26) on pressure gage outlet (24) and discharge fitting (2).
11. Install 0.5 in. (12.7 mm) flexible hose (10) on test stand lube pressure (16) and test stand lube return (8).
12. Install fuel input hose (23) on fuel input connector (22) to discharge fitting (2).
13. Install fuel outlet hose (18) from test stand (1) outlet connector (20) to stand fuel return connector (9).
14. Attach leakage accumulator hose (25) on No. 1 accumulator can (27) from test stand leak test connector (19).
15. Connect 0.25 in. (6.35 mm) flexible hose (14) to check valve fitting (4) on pump (7) and to auxiliary return connector (21).

NOTE

Spring must hold throttle lever to full open position.

16. Install throttle lever spring (29) on top of throttle lever (30) and adapter bracket (28).

5-25. FUEL PUMP CALIBRATION (Contd)

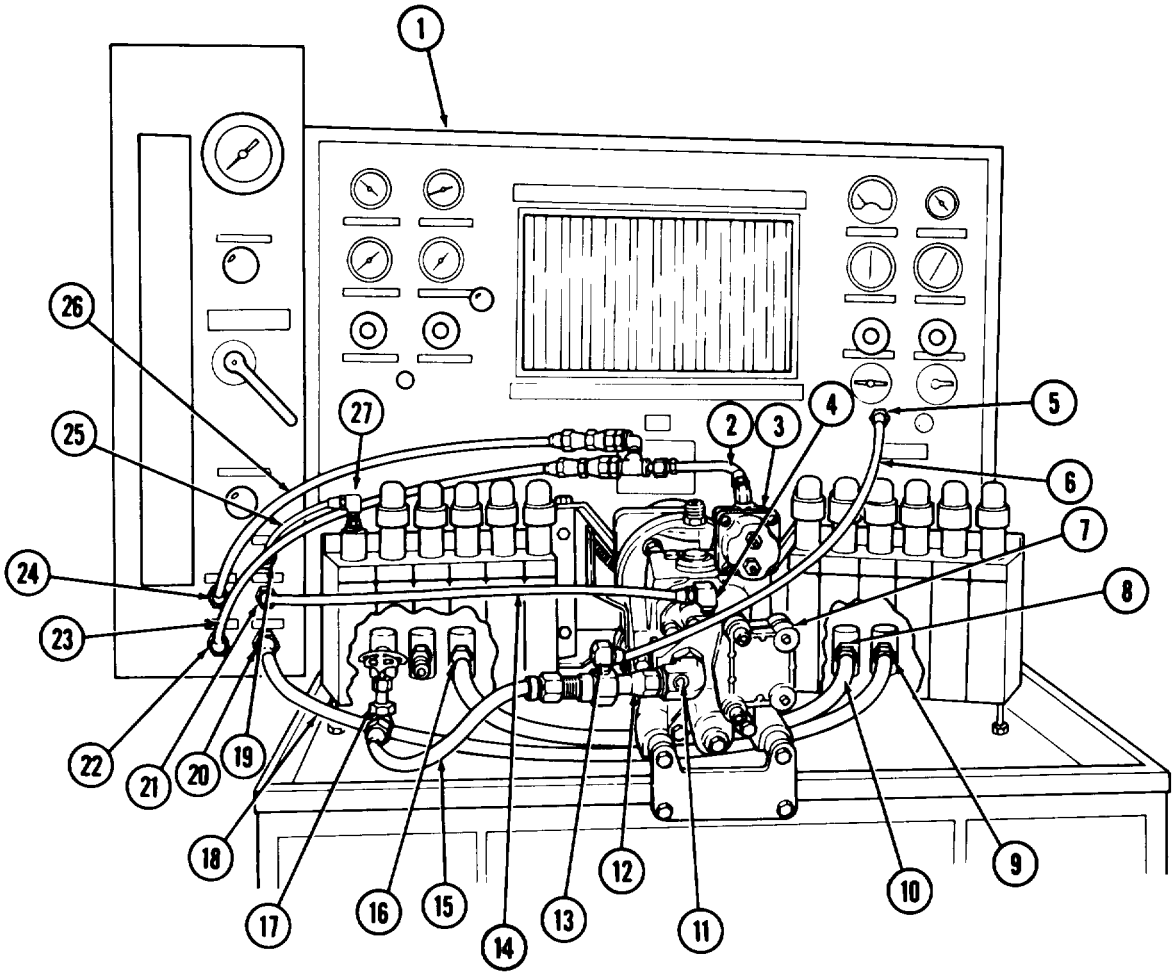

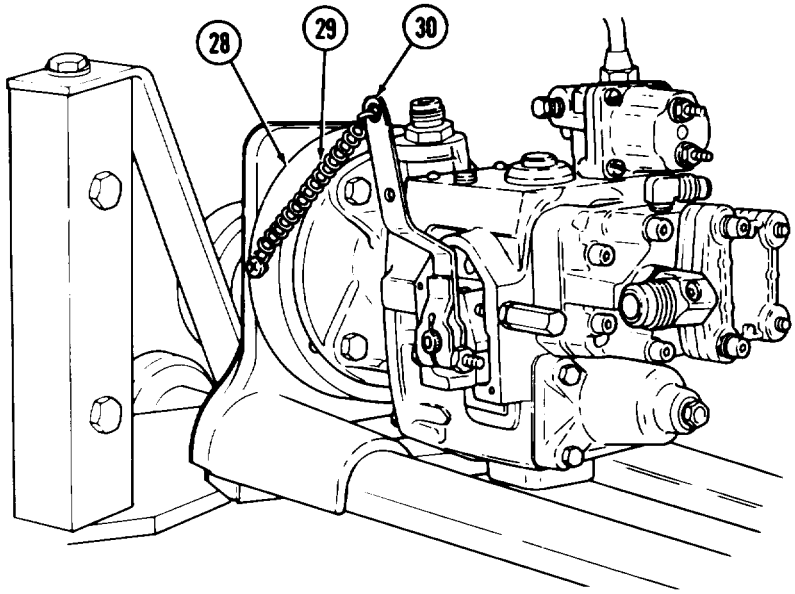

5-25. FUEL PUMP CALIBRATION (Contd)

c. Fuel Pump Run-In

NOTE

Ensure all valves on test stand are closed to prevent leakage.

1. Open bypass valve (8), fuel pressure valve (7), and flow control valve (10) on test stand (1).
2. Open fuel shutoff valve (11) on fuel pump (3).

CAUTION

Check tachometer drive for clockwise rotation. If rotation is not clockwise, reverse rotation of test stand. Failure to do so may cause damage to equipment.

3. Apply lubricating oil to tachometer drive seal (2).
4. Start test stand (1) by depressing start button (6).
5. Place fuel heat switch (4) on test stand (1) in ON position.

NOTE

Fuel temperature for 45A calibrating oil must be 90°-100°F (32°-38°C) and 80°-100°F (27°-38°C) for diesel fuel.

6. Place selector valve (9) in rotameter position.
7. Turn range crank (5) to high range position.

NOTE

Perform steps 8 and 9 for vehicles equipped with variable speed (VS) governor.

8. Back out both high adjusting screw (12) and low adjusting screw (14).
9. Position governor throttle lever (13) to full fuel position.

5-25. FUEL PUMP CALIBRATION (Contd)

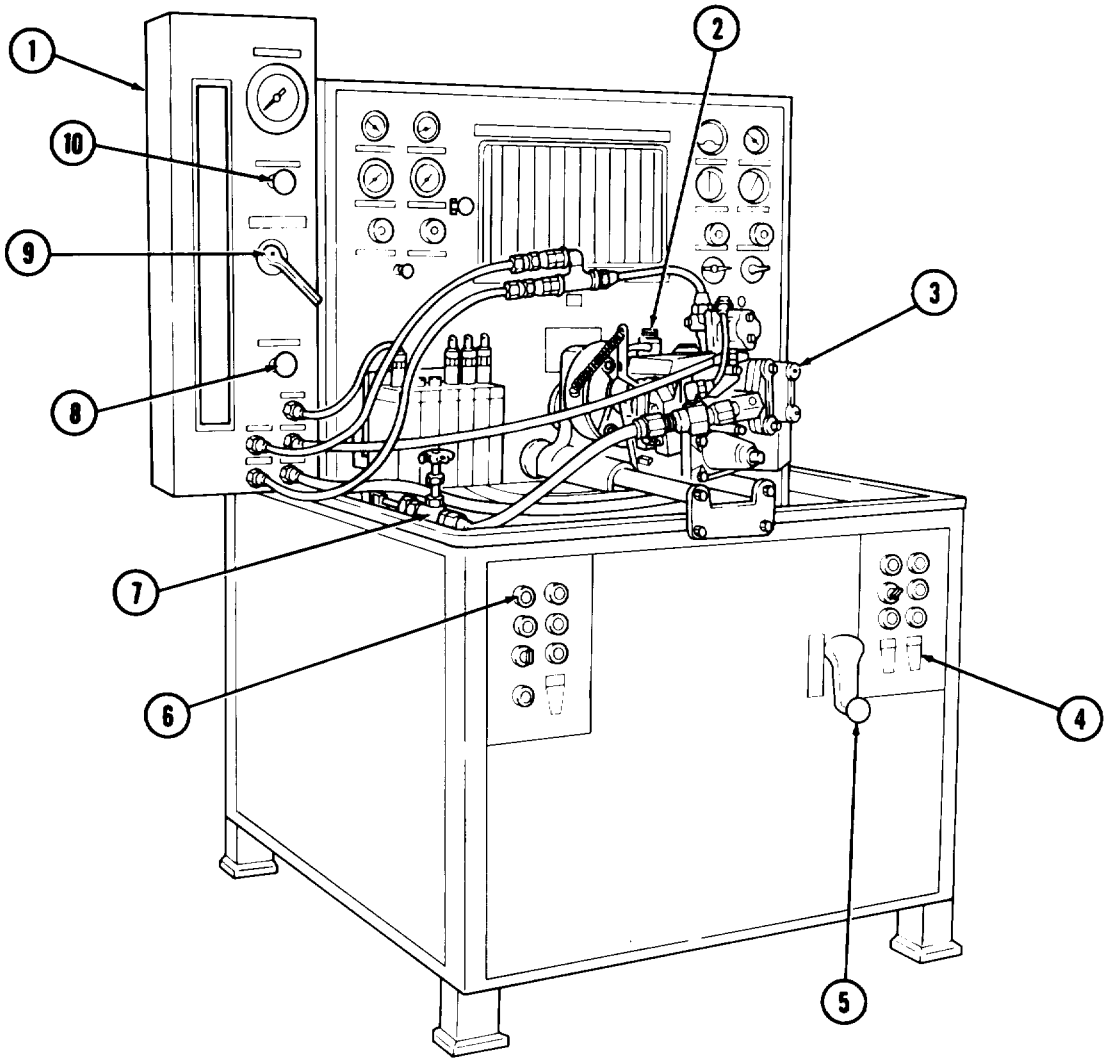

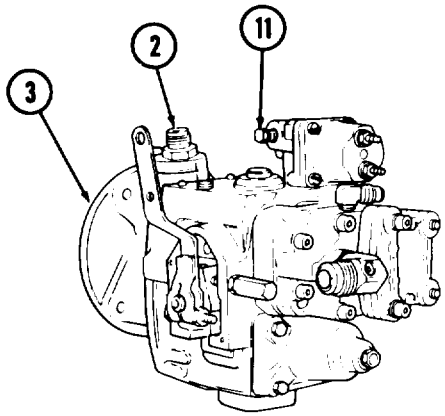

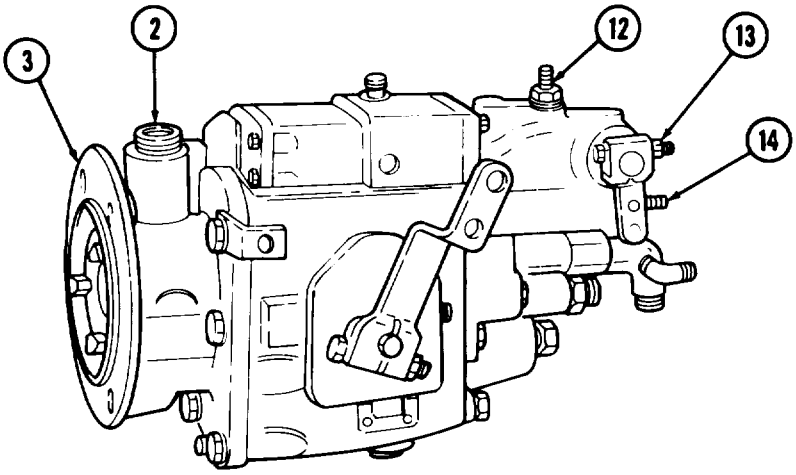

5-25. FUEL PUMP CALIBRATION (Contd)

CAUTION

Fuel pump must pick up fuel at 500 rpm without priming. If no fluid pickup is indicated at rotameter, inspect fuel filter for improper installation, motor switch for correct rotation, open suction valve and hose, and gear pump connections are tight. Failure to do so may cause damage to equipment.

NOTE

Test stand rpm speed is controlled by fast and slow buttons.

10. Start test stand (1) by depressing start button (7).
11. Run to 500 rpm using speed control buttons (5) and (6).

NOTE

- Check rotameter for air in fuel. If air bubbles are present, work throttle from full open to idle several times to remove air from fuel.
- If air bubbles persist, turn test stand OFF and inspect all connections for leaks.
- If fuel pump is new or has been disassembled and reassembled, run pump at 500 rpm for five minutes to allow bearings and seals to seat and purge air from system.

d. Testing Pump Seals for Leaks

CAUTION

Do not leave fuel pressure valve closed more than five minutes. Damage to fuel pump may occur.

1. With test stand (1) operating at 500 rpm close fuel pressure valve (8) and open flow control valve (11) on test stand (1).
2. Test stand (1) vacuum should be 25 in. (63.5 cm), If not, check all test hose connections.
3. Close bypass valve (9).
4. Apply grease to weep hole (17) on fuel pump (4). If grease is pulled into weep hole (17) at 25 in. (63.5 cm) vacuum, replace front cover (18) (para. 5-23).
5. Apply grease around throttle shaft (16). If grease is pulled in replace throttle shaft (16) (para. 5-22).
6. Apply grease to tachometer seal bore (13). If grease is pulled in replace fuel pump housing (14) (para. 5-22).
7. Open fuel pressure valve (8) on test stand (1).

e. Testing Governor Cutoff RPM

1. Open fuel control valve (11) on test stand (1).
2. Using both the fast (5) or slow (6) button, increase fuel pump (4) speed to 2100 rpm.

5-25. FUEL PUMP CALIBRATION (Contd)

NOTE

Once 8 in. (20.3 cm) HG vacuum has been obtained, do not change setting on test stand. Readings will fluctuate during other tests. Record increases or decreases as they occur.

3. Adjust flow control valve (11) to obtain 8 in. (20.3 cm) HG mercury on vacuum gage (3).
4. Place selector valve (10) in rotameter position.
5. Increase fuel pump (4) speed until fuel pressure drops. Test stand tachometer (2) should read between 2130-2150 rpm. If tachometer reading is not within limits, strip test stand (1).

WARNING

Test stand must be shutoff before changing shims in spring pack. Small parts under pressure may shoot out causing injury to personnel or damage to equipment.

NOTE

- Perform steps 6 through 10 only if spring pack shims are to be changed.
- Each 0.001 in. (0.025 mm) shim thickness will change speed approximately two rpm. Shims are available in 0.005, 0.010, and 0.020 in. (0.13, 0.25, and 0.51 mm) thickness.
- If more than .015 in. (0.38 mm) thick shim is required, replace spring.

6. Remove fuel pump (4) from test stand (1) (para. 5-24).
7. If cutoff is too low, remove spring pack (15) (para. 5-18) and add shims.
8. If cutoff is too high, remove spring pack (15) (para. 5-18) and remove shims.
9. Install fuel pump (4) on test stand (1) (para. 5-24).
10. Run fuel pump (4) at 500 rpm. Move throttle lever (12) back and forth until rotameter shows no air in fuel. Recheck governor cutoff rpm.

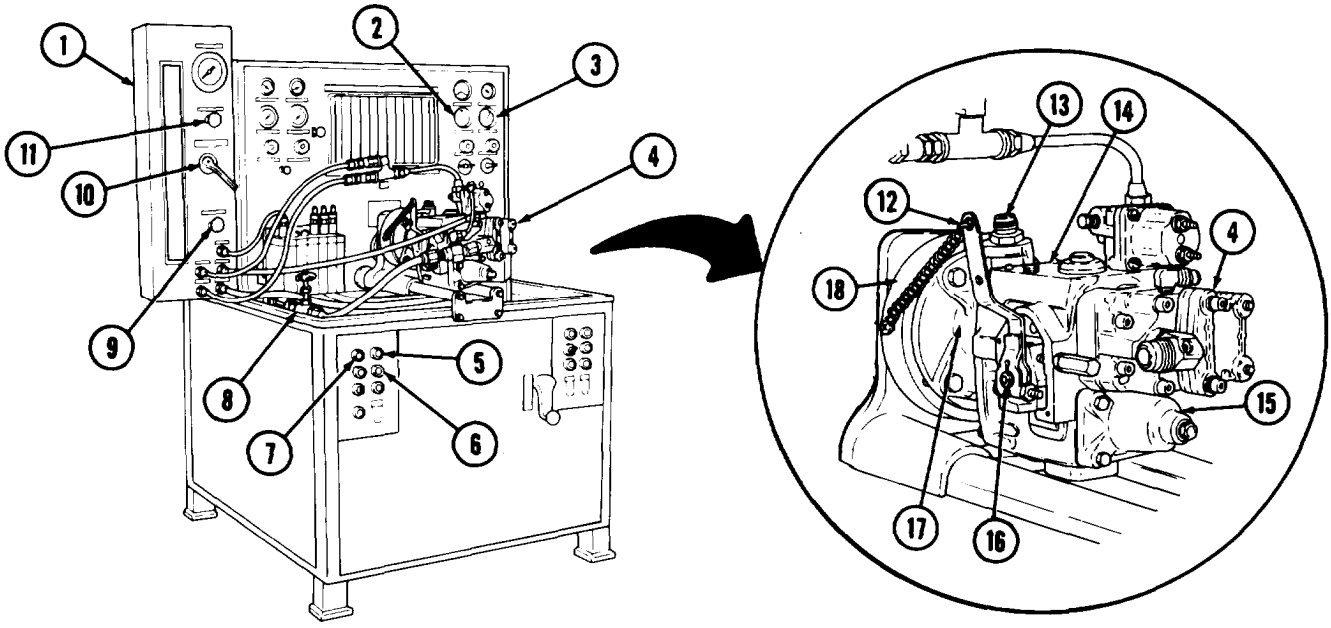

5-25. FUEL PUMP CALIBRATION (Contd)

f. Testing and Adjusting Throttle Leakage

1. Increase fuel pump(5) speed to 2100 rpm. Place selector valve (8) in rotameter position and set fuel flow control valve (1) at 315 pph reading. Rotameter float should read 315 pph on test stand (2).
2. Place selector va]ve (8) in leakage test position. Place count selector switch (7) to 1000 pulse position. Pull out dumping lever (3) to retain fuel in number one burrette (4).

CAUTION

Do not hold throttle lever in idle position for more than two minutes to complete test. Damage to fuel pump may occur.

3. Remove throttle spring (9) and position throttle lever (10) in idle position.
4. Depress pulse counter button (6) to fill number one burrette (4).
5. To prevent fuel overflow, push dumping lever (3) inward to empty number one burrette (4) of fuel.

NOTE

- A test cycle is one-half minute duration.
- For one test cycle fuel delivery is 40-70 cc.

6. At end of cycle, read amount of fuel in number one burrette (4).

NOTE

- Adjust throttle screw counterclockwise to decrease leakage.
- Must throttle screw clockwise to increase leakage.

7. If throttle leakage is not as specified, adjust rear throttle screw (11) as necessary.

5-25. FUEL PUMP CALIBRATION (Contd)

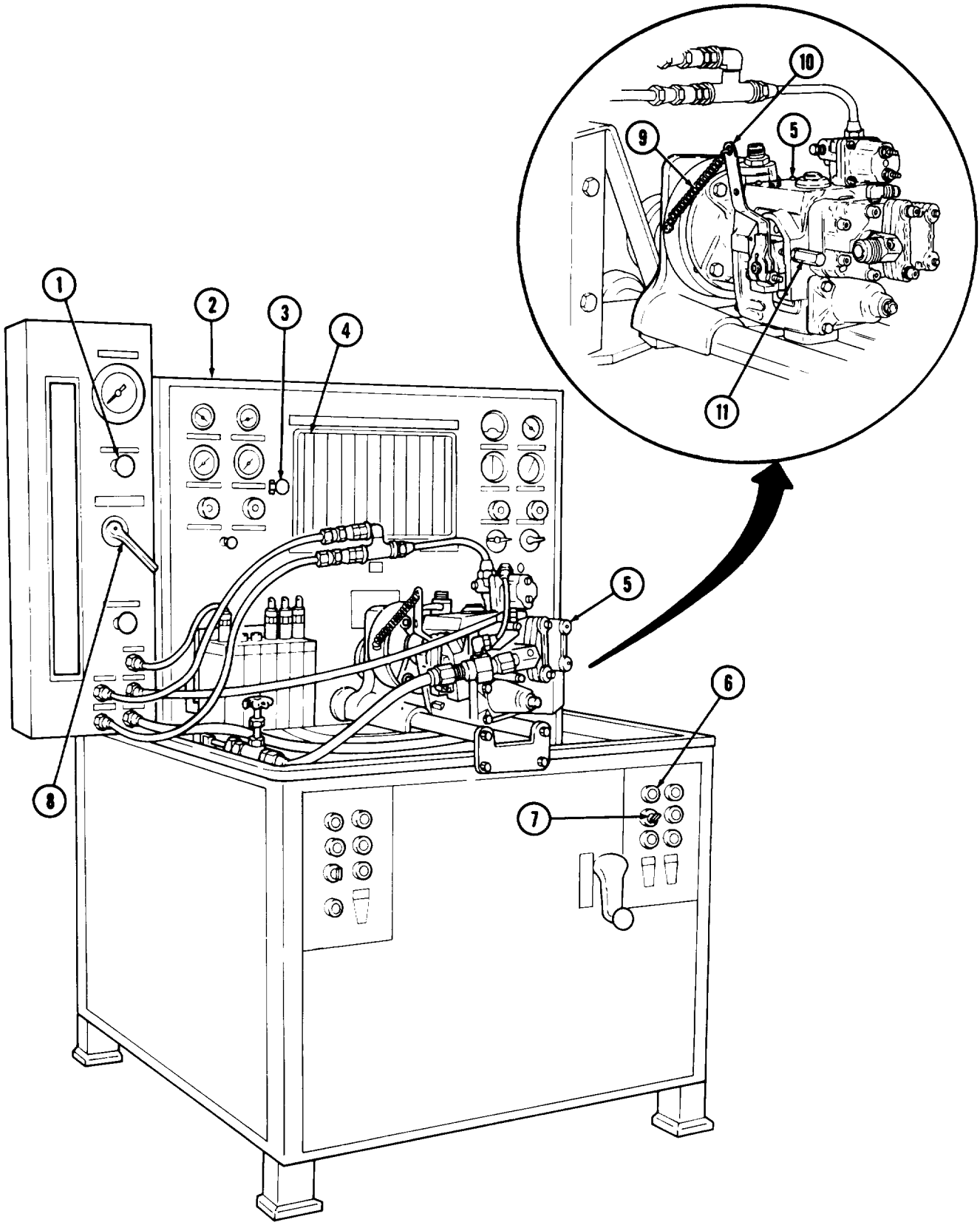

5-25. FUEL PUMP CALIBRATION (Contd)

g. Testing and Adjusting Idle Speed

1. Place selector valve (7) to idle position. Set fuel pump (4) speed to 500 rpm. Place throttle lever (3) to idle position. Fuel pressure gage (2) should read 26 psi (179.27 kPa).

NOTE

- If unable to obtain proper fuel pressure, and screw bottoms, stop the test stand, remove spring pack (para. 5-18) and add shims to spring end of adjusting screw. Retest cutoff rpm and throttle leakage.
- Perform steps 2 and 3 if fuel pressure is not to limit.

2. Remove governor spring pack housing pipe plug (5) from housing (6).
3. Using spring pack adjusting tool adjust idle screw (8) until 26 psi (179.27 kPa) is obtained.

NOTE

Each time governor spring pack housing or adjusting tool is removed, run pump until purged of air.

4. After proper adjustment is made, stop the test stand (1) and remove spring pack adjusting tool.
5. Install governor spring pack housing pipe plug (5) into housing (6).
6. Purge air from fuel pump (4).

5-25. FUEL PUMP CALIBRATION (Contd)

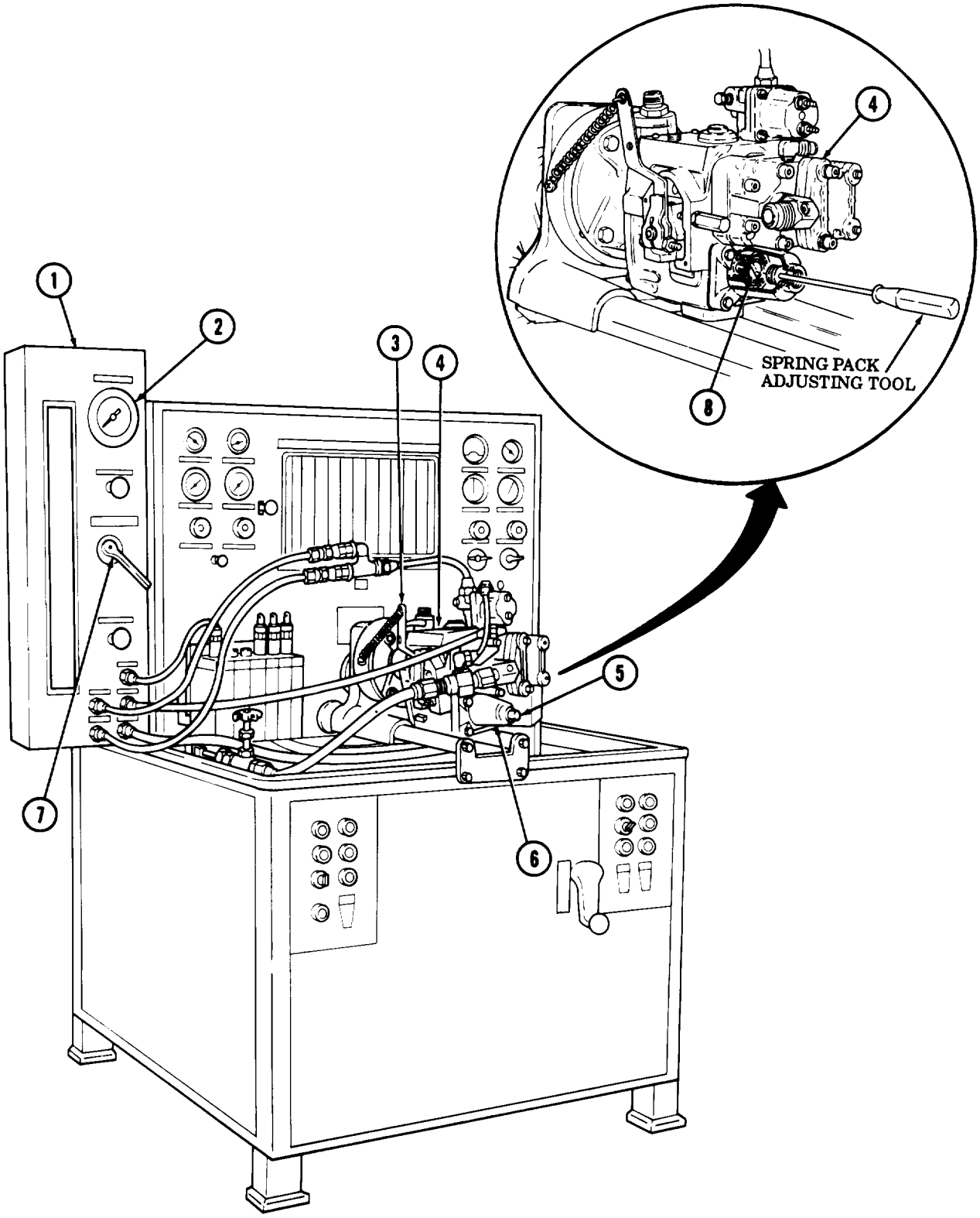

5-25. FUEL PUMP CALIBRATION (Contd)

h. Checking and Adjusting Throttle Lever Travel

NOTE

Use travel template no. 3375355 to set fuel pump throttle lever travel. Ensure combination of first and third or second and fourth holes on template are used. Any other combination will result in an inaccurate reading. Correct travel is 27-29 degrees.

1. Place travel template (1) on throttle housing (3).

CAUTION

Do not adjust rear throttle screw. The rear throttle screw has already been set to provide the proper deceleration time for the engine, any changes at this point will require recalibration of throttle leakage.

2. Place throttle lever (2) in idle position.

NOTE

Throttle lever can be repositioned on shaft to aline lever with template holes.

3. Aline travel template (1) idle hole with center of throttle lever (2).
4. Move throttle lever (2) to full throttle, aline holes in travel template (1) with holes in throttle lever (2).

NOTE

The throttle lever can be checked for travel adjustment by using a level and angle indicator.

5. Place level and angle indicator (5) against bottom of throttle lever (2).
6. Move throttle lever (2) to idle position, note reading on scale of indicator (5).
7. Move throttle lever (2) to full throttle position and note reading on scale of indicator (5).
8. Add readings taken in steps 6 and 7. The correct throttle lever adjustment is 27-29 degrees.
9. If throttle lever (2) travel is not correct, adjust throttle step screw (4).

5-25. FUEL PUMP CALIBRATION (Contd)

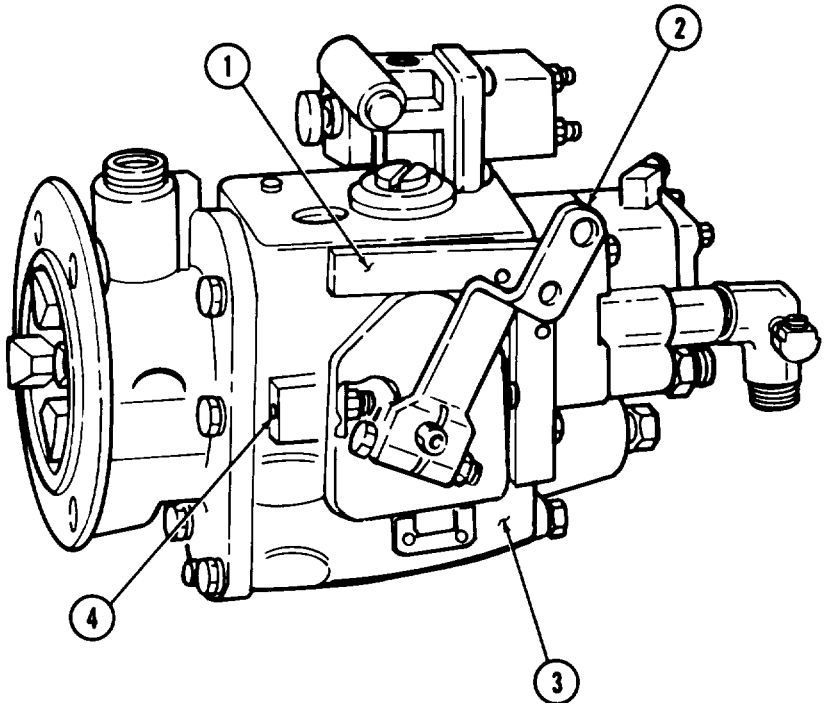

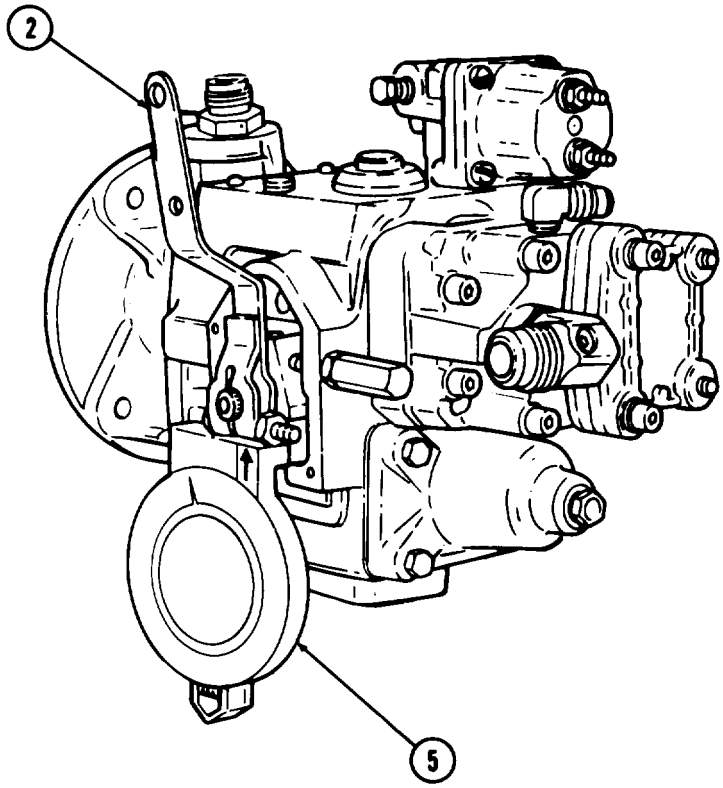

5-25. FUEL PUMP CALIBRATION (Contd)

i. Testing and Adjusting Pump Main Pressure

1. Set vacuum gage (5) to 8 in. (20.3 cm) HG, open throttle wide open and adjust speed to 2100 rpm.
2. Place selector valve (4) on test stand (2) to rotameter position and set fuel flow to 3.15 pph with fuel flow control valve (1).

NOTE

Fuel pressure should be 172-178 psi (1186-1227 kPa).

3. Must fuel pressure if 172-178 psi (1186-1227 kPa) is not obtained on fuel pressure gage (3).

j. Testing and Adjusting Fuel Pressure

CAUTION

Be careful when drilling out ball bearing not to damage bore of throttle shaft.

NOTE

- Throttle shaft internal adjusting screw is covered by throttle shaft ball in end of throttle shaft.
- Perform step 1 if ball bearing was not removed previously,

1. Center punch and drill out ball bearing (6) with 0.25 in. (6,35 mm) drill bit.

NOTE

Screw adjusting screw clockwise to increase and counterclockwise to decrease fuel pressure.

2. Set fuel pressure to 172-178 psi (1186-1227 kPa).
3. Using shaft installation tool, insert new ball (6) in throttle shaft (7).

5-25. FUEL PUMP CALIBRATION (Contd)

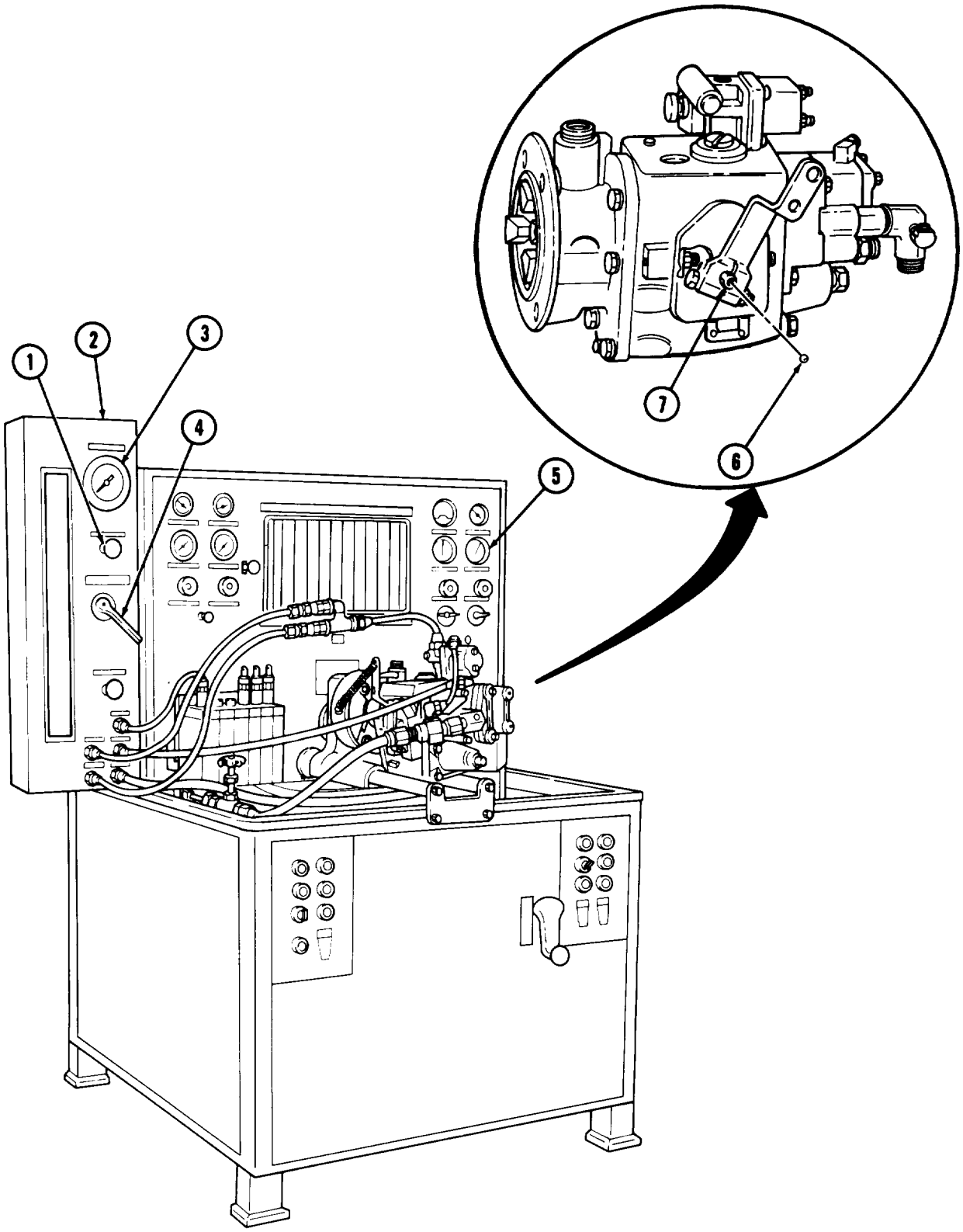

5-25. FUEL PUMP CALIBRATION (Contd)

k. Testing and Adjusting Governor Fuel Pressure

1. Set fuel pump (3) speed at 1500 rpm.
2. Place selector valve (4) on test stand(2) in rotameter position. place throttle lever (5) to full open position.
3. Set fuel flow control valve (1) to 2.30 pph. Fuel pressure should be 100-106 psi (689-730 kPa).
4. If fuel pressure is not 100-106 psi (689-730 kPa) check governor cutoff rpm (subtask e.).

l. Checking and Adjusting Governor Weight Pressure

1. Set fuel pump (3) speed to 1000 rpm.
2. Place throttle lever (5) to full open position.
3. Place selector valve (4) in rotameter position.
4. Set fuel flow control valve (1) to 150 pph. Fuel pressure should be 50-58 psi (345-400 kPa).

NOTE

- Add shims to increase pressure, remove shims to decrease pressure.
- Perform steps 6 through 8 if adjustment fails.

5. If fuel pressure is not 50-58 psi (345-400 kPa), remove front cover (7) and add or remove shims from behind weight plunger (para. 5-23).
6. Remove gear pump (6) from fuel pump (3) (para. 5-17).
7. Install gear pump block plate and gear pump (6) on fuel pump (3) (para. 5-17).
8. Retest fuel pump (3). If pressure is not within limits, replace gear pump (6).

5-25. FUEL PUMP CALIBRATION (Contd)

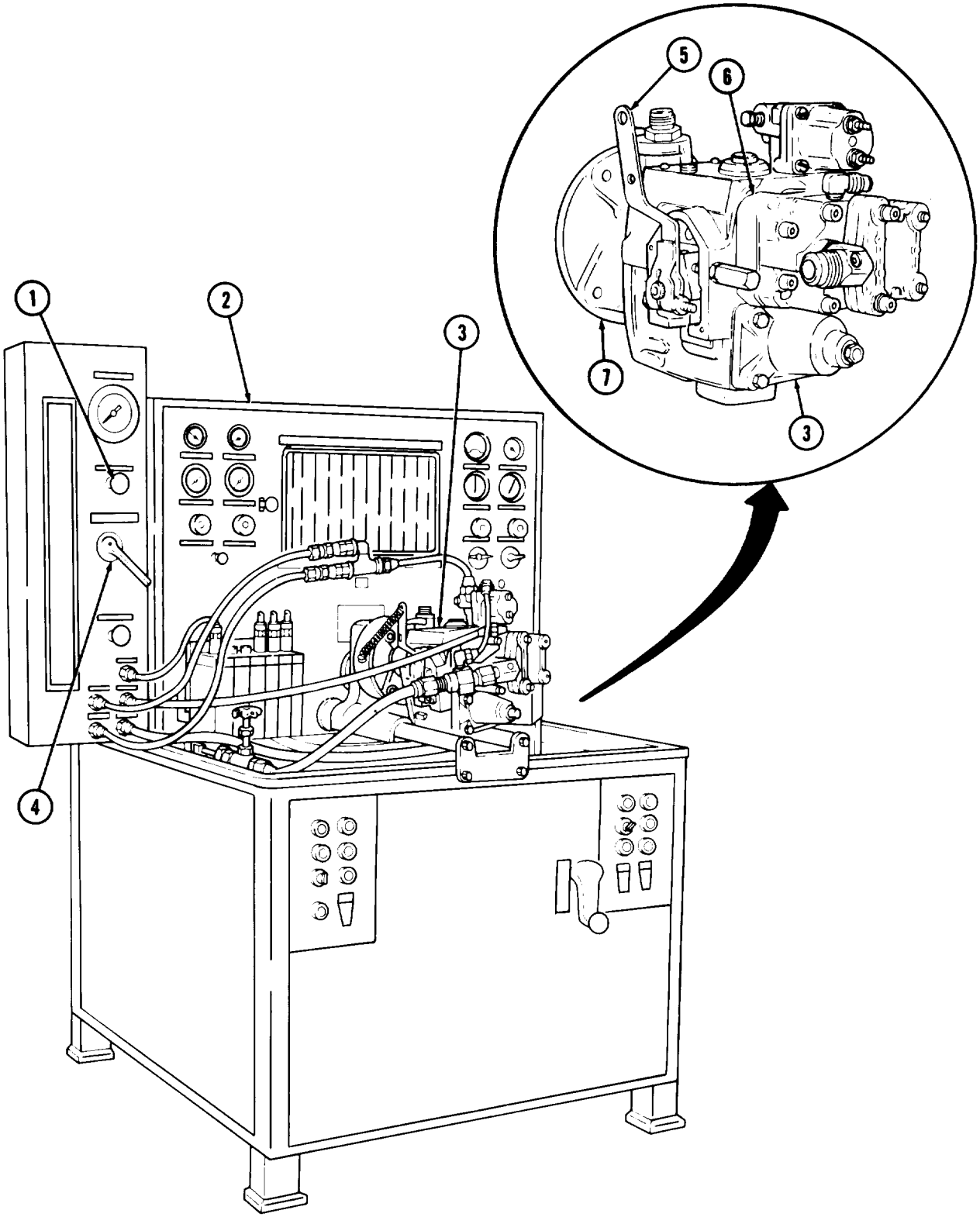

5-25. FUEL PUMP CALIBRATION (Contd)

m. Testing and Adjusting Idle Speed (VS Governor Only)

1. Place throttle lever (14) and VS governor lever (18) to full fuel position.
2. Increase fuel pump (4) speed to 2140 rpm.
3. Loosen locknut (16). Turn high idle screw (15) in until fuel pressure starts to drop, then retighten locknut (16).
4. Decrease fuel pump (4) speed to 2100 rpm and gradudly increase speed until fuel pressure starts to drop. Fuel pump (4) speed should be 2120-2140 rpm.
5. If fuel pump (4) speed is not 2120-2140 rpm, adjust high idle screw (15) until speed is 2120-2140 rpm.
6. Decrease fuel pump (4) speed to 500 rpm. Place VS governor lever (18) to idle position and test stand (1) selector valve (12) to idle position.
7. Adjust VS governor low idle screw (17) to obtain 26 psi (179 kPa).

n. Shut Down and Removal From Test Stand

1. Press stop button (6) to stop test stand (1).
2. Turn off fuel heat switch (5), close fuel pressure control valve (7), and close fuel flow control valve (18).
3. Remove 0.25 in. (6.35 mm) hose (8) from fitting (3) on fuel pump (4) and fitting (9) on test stand (1).
4. Remove leakage accumulator hose (11) from number one accumulator can (2) and test stand leak test connector (10).

5-25. FUEL PUMP CALIBRATION (Contd)

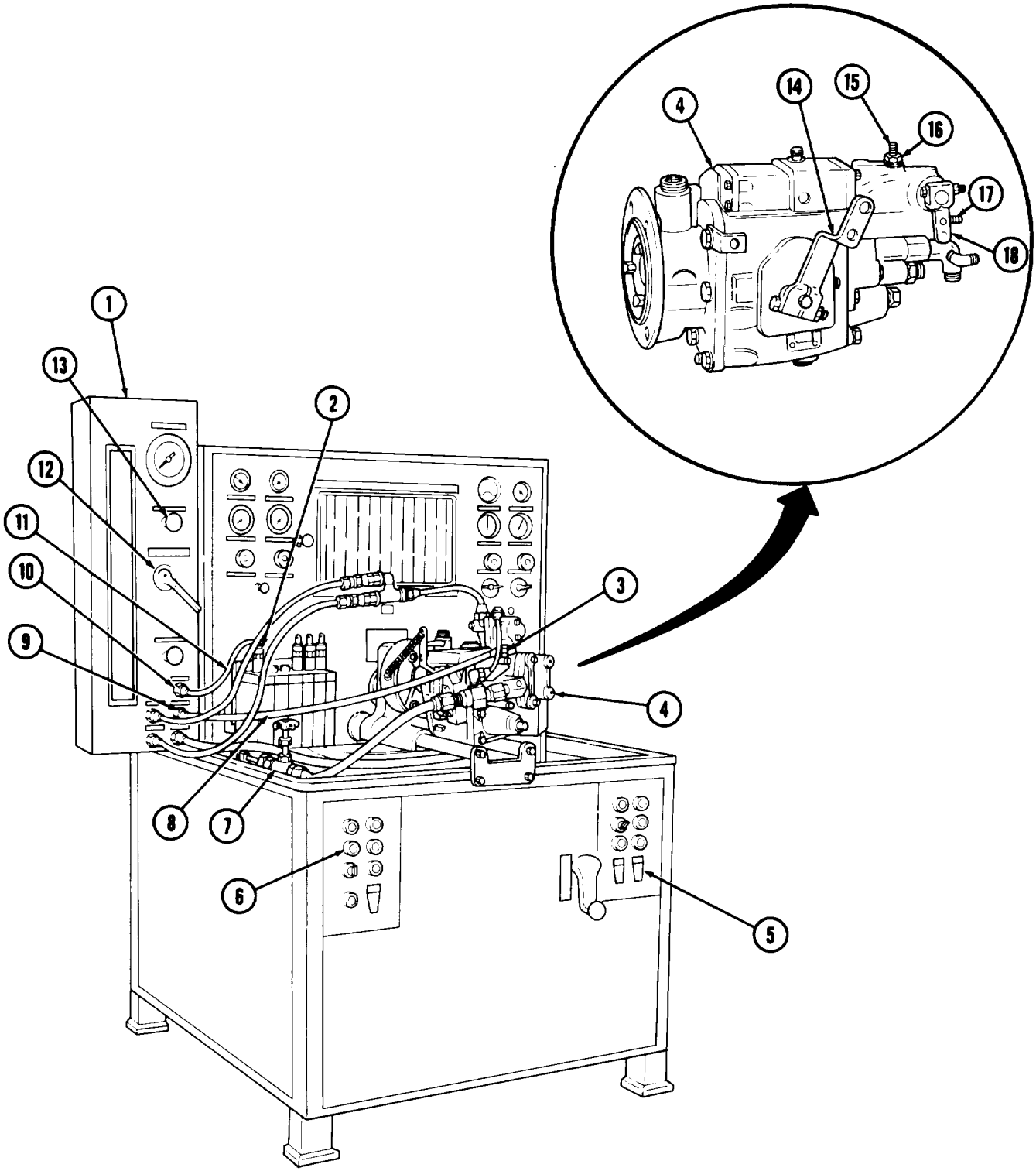

5-25. FUEL PUMP CALIBRATION (Contd)

5. Remove fuel outlet hose (9) from test stand fuel input connector (10) and fuel return connector (4).
6. Remove fuel input hose (12) from input connector (11) and discharge fitting (2).
7. Remove 0.5 in. (12.7 mm) hose (7) from stand lube pressure (8) and test stand (1) lube return (5).
8. Remove fuel pressure hose (14) from test stand (1) pressure gage outlet (13) and discharge fitting (2).
9. Remove discharge fitting (2) from fuel shutoff valve (3) and test stand (1) input connector (11).
10. Remove throttle lever spring (6) from test stand (1).

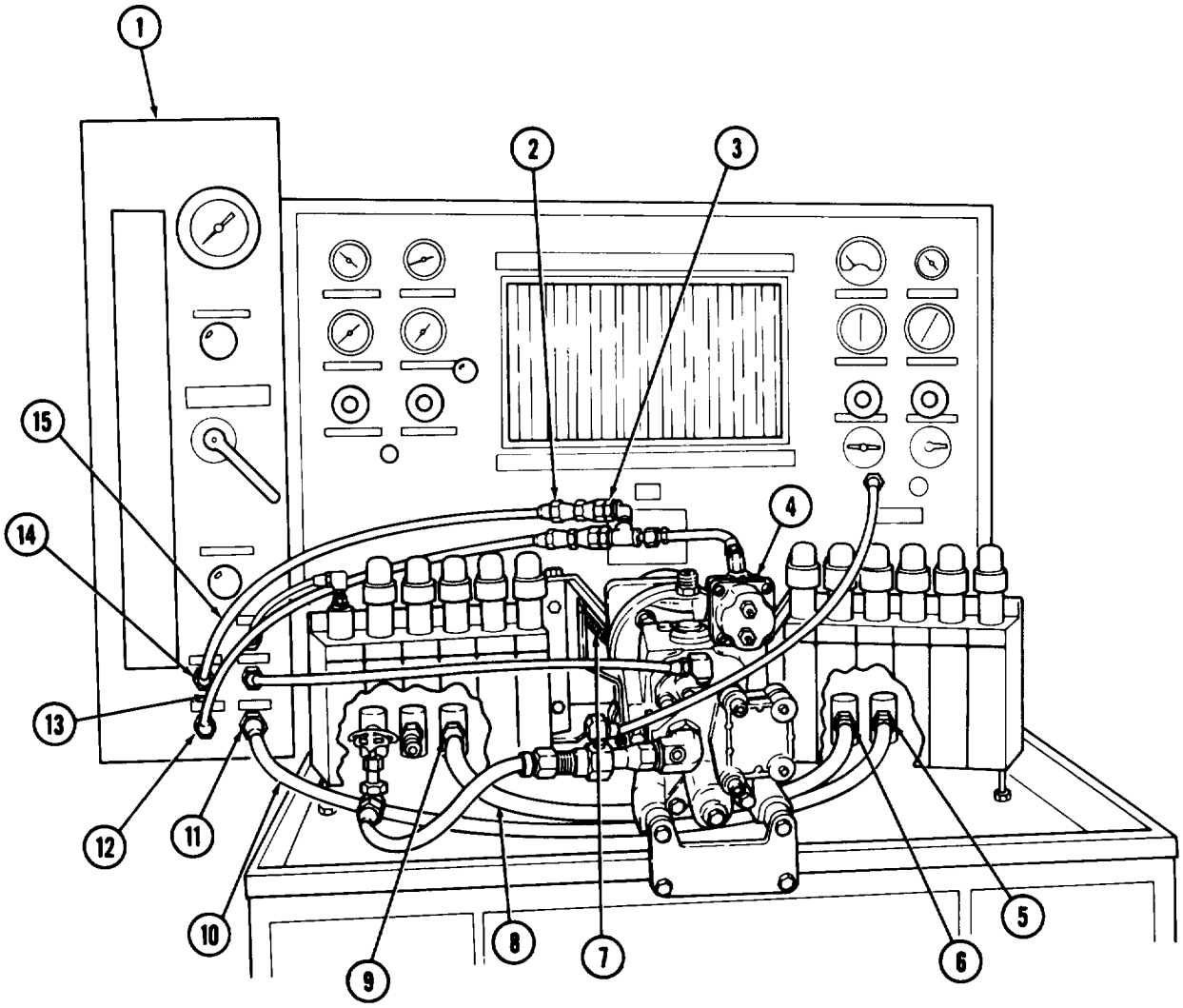

5-25. FUEL PUMP CALIBRATION (Contd)

11. Remove 0.25 in. (6.35 mm) hose (16) from test stand (1) manifold vacuum gage adapter (15) and inlet adapter assembly (17).
12. Remove 0.5 in. (12.7 mm) hose (21) from fuel pressure control valve (22) and adapter (20).
13. Remove fuel pump inlet adapter assembly (19) from pump inlet port (18).

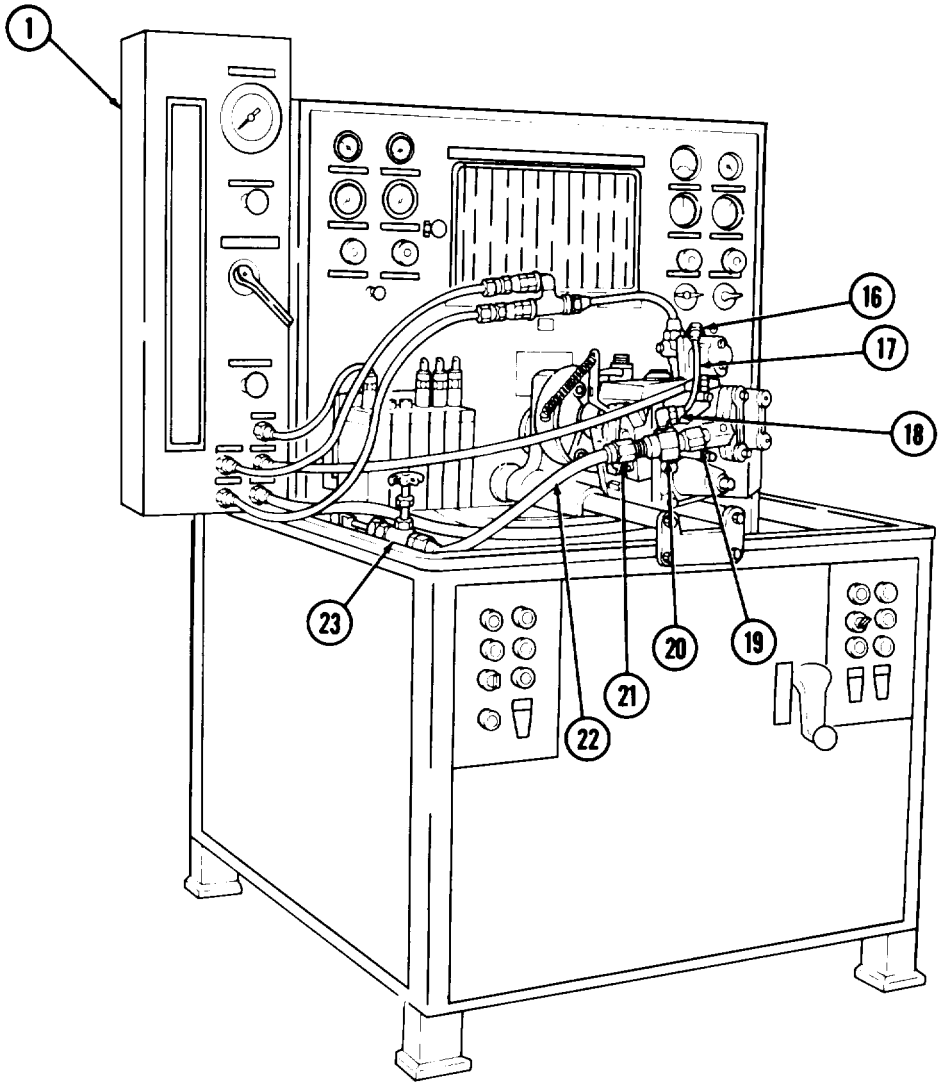

5-25. FUEL PUMP CALIBRATION (Contd)

14. Loosen bar clamp (9) and slide fuel pump (3) and ring and adapter bracket (10) back from test and drive coupling (1).
15. Remove coupling drive (2) from test stand drive coupling (1).
16. Remove four screws (7), washers (8), and fuel pump (3) from ring and adapter bracket (10).
17. Remove nut (15), lockwasher (14), washer (13), screw (17), washer (16), and throttle lever (12) from throttle lever shaft (19). Discard lockwasher (14).
18. Install cover (11) on fuel pump (3) with two screws (18).
19. Install lever (12) on accelerator shaft (19) with screw (17), washer (16), washer (13), new lockwasher (14), and nut (15).
20. Install new safety wire (4) on throttle leakage adjusting screw (6) and governor adjusting screw (5).

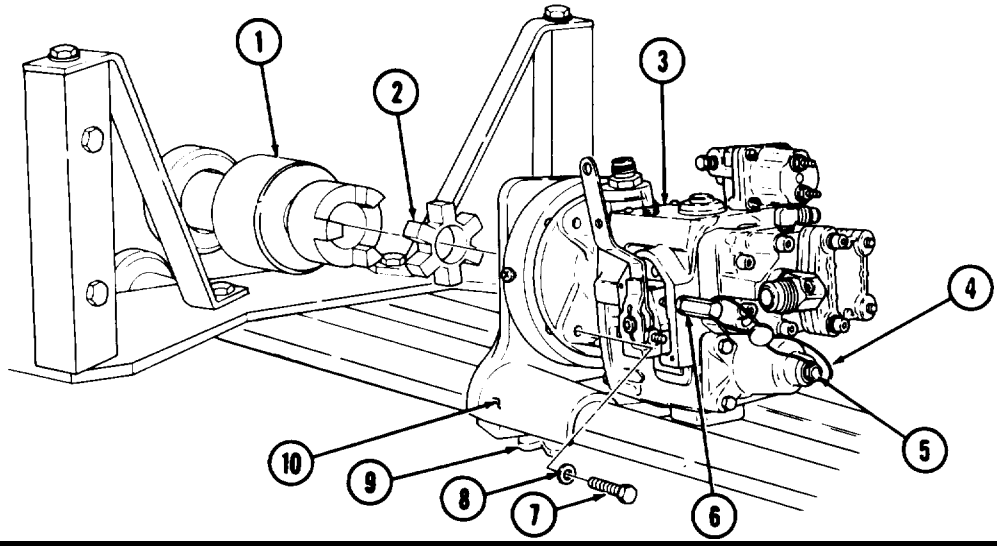

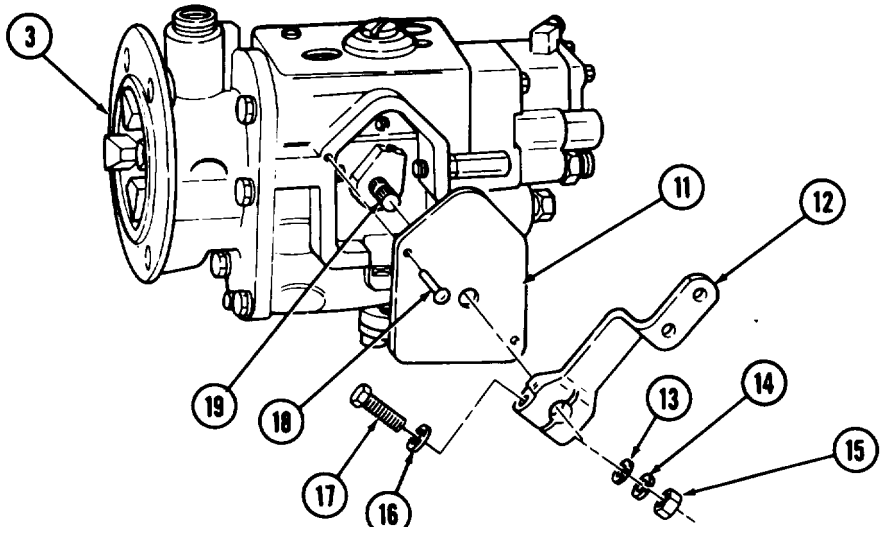

FOLLOW-ON TASKS:
- Plug or cover all open ports or holes on pump and test stand.
- Install manual fuel pump shutoff valve (para. 5-15).
- Install fuel pump (para. 5-13).

CHAPTER 6

COOLING SYSTEM MAINTENANCE

6-1. COOLING SYSTEM MAINTENANCE INDEX

PARA. NO.	TITLE	PAGE NO.
6-2.	Radiator Maintenance	6-1
6-3.	Water Manifold Maintenance	6-4
6-4.	Water Pump Maintenance	6-6

6-2. RADIATOR MAINTENANCE

THIS TASK COVERS:

a. Disassembly
b. Cleaning and Inspection
c. Assembly

INITIAL SETUP

APPLICABLE MODELS
All

TOOLS
General mechanic's tool kit (Appendix B, Item 1)

MATERIALS/PARTS
Two gaskets (Appendix D, Item 126)

REFERENCES (TM)
TM 9-2320-260-20
TM 9-2320-260-34P-1
TM 750-254

EQUIPMENT CONDITION
- Radiator removed (TM 9-2320-260-20).
- Radiator shrouds removed (TM 9-2320-260-20).

6-2. RADIATOR MAINTENANCE (Contd)

a. Disassembly

1. Remove four nuts (16) and lockwashers (17) from four studs (15).
2. Remove four nuts (21) from four weld screws (7).
3. Remove fourteen screw-assembled lockwashers (18) and two rear clamping strips (22) from core (20), top tank (2), and bottom tank (19).
4. Remove twenty screw-assembled lockwashers (1) from two front clamping strips (9), core (20), top tank (2), and bottom tank (19).
5. Remove eight screw-assembled lockwashers (4) from two core supports (10), core (20), top tank (2), and bottom tank (19).
6. Remove four nuts (12) from four weld screws (8).
7. Remove eight nuts (3) and four studs (13) from two core supports (10), bottom tank (19), top tank (2), and core (20).
8. Remove eighteen nuts (11), screw-assembled lockwashers (5), and two core supports (10) from core (20), top tank (2), and bottom tank (19).
9. Remove four studs (15) from two rear clamping strips (22).
10. Remove top tank (2) and gasket (6) from core (20). Discard gasket (6).
11. Remove bottom tank (19) and gasket (14) from core (20). Discard gasket (14).
12. Remove gasket (6) and (14) remains from top tank (2), core (20), and bottom tank (19).

b. Cleaning and Inspection

For general cleaning and inspection instructions, refer to TM 750-254.

c. Assembly

1. Install two new gaskets (6) and (14), bottom tank (19), and top tank (2) on core (20) with two front clamping strips (9) and twenty new screw-assembled lockwashers (1).
2. Install two core supports (10) on core (20), top tank (2), and bottom tank (19) with four studs (13) and eight nuts (3).
3. Install eighteen screw-assembled lockwashers (5) and nuts (11) on two core supports (10).
4. Install four studs (15) on two rear clamping strips (22).
5. Install four nuts (12) on four weld screws (8).
6. Install eight screw-assembled lockwashers (4) on top tank (2), bottom tank (19), and two core supports (10).
7. Install two rear clamping strips (22) on core (20), top tank (2), and bottom tank (19) with fourteen screw-assembled lockwashers (18).
8. Install four nuts (21) on four weld screws (7).
9. Install four lockwashers (17) and nuts (16) on four studs (15).

6-2. RADIATOR MAINTENANCE (Contd)

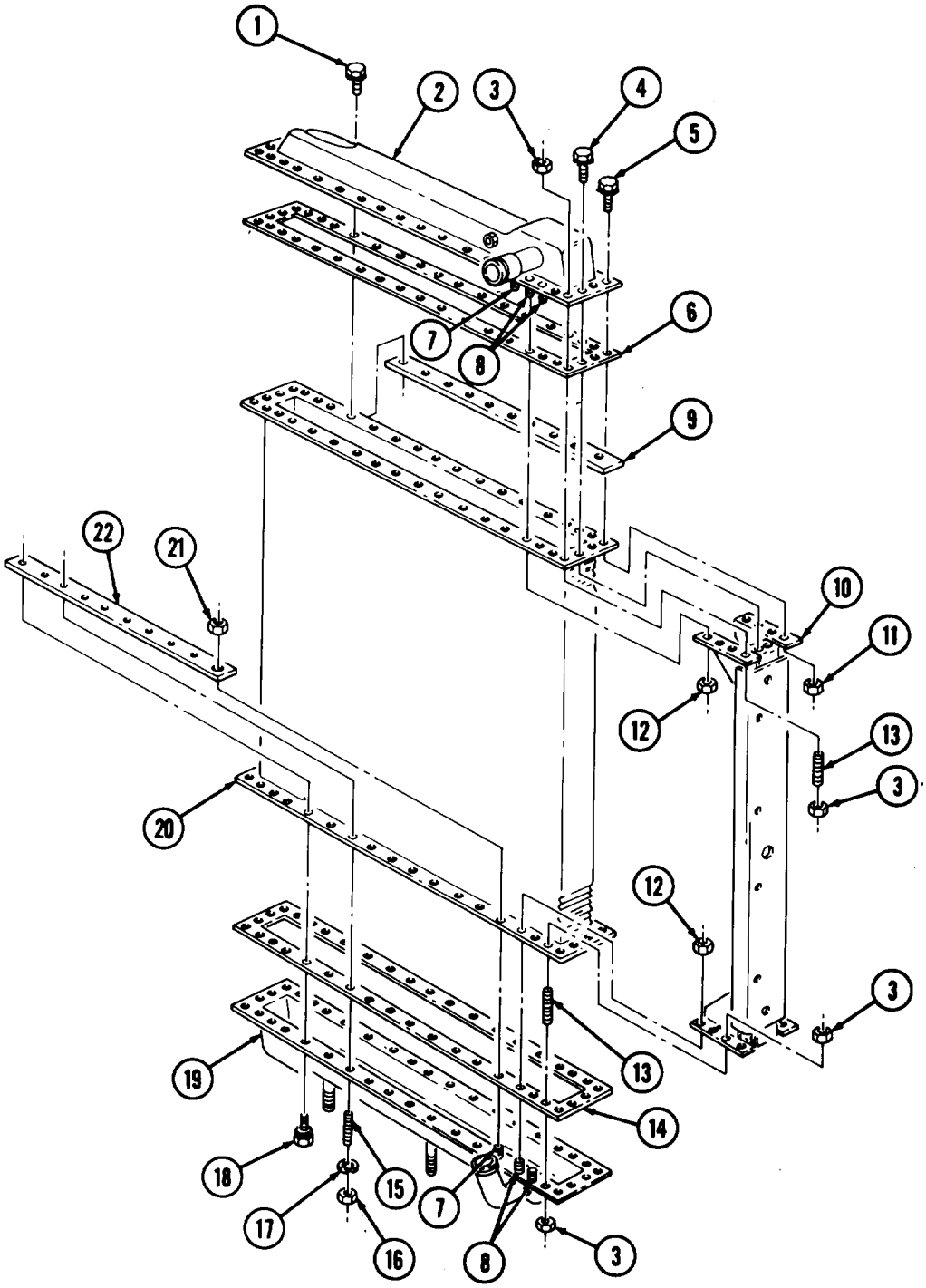

FOLLOW-ON TASKS: • Install radiator shrouds (TM 9-2320-260-20).
• Install radiator (TM 9-2320-260-20).

6-3. WATER MANIFOLD MAINTENANCE

THIS TASK COVERS:

a. Removal
b. Disassembly
c. Assembly
d. Installation

INITIAL SETUP

APPLICABLE MODELS
All

TOOLS
General mechanic's tool kit
(Appendix B, Item 1)

MATERIALS/PARTS
Twelve screw assembled lockwashers
(Appendix D, Item 381)
Six gaskets (Appendix D, Item 132)
Four preformed packings
(Appendix D, Item 309)

REFERENCES (TM)
TM 9-2320-260-20
TM 9-2320-260-34P-1

EQUIPMENT CONDITION
- Thermostat housing removed (TM 9-2320-260-20).
- Surge tank removed (TM 9-2320-260-20).

a. Removal

1. Loosen clamp (1) and remove heater hose (16) from drain cock (2).
2. Remove clamp (1) from heater hose (16).
3. Disconnect water temperature sending unit wire (13) from water temperature sending unit (12).
4. Remove twelve screw-assembled lockwashers (10), front manifold (9), center manifold (14), rear manifold (18), and six gaskets (17) from cylinder head (15). Discard screw-assembled lockwashers (10) and gaskets (17).

b. Disassembly

1. Remove drain cock (2), adapter (20), and adapter (19) from rear manifold (18).
2. Remove water temperature sending unit (12) from front manifold (9).
3. Remove plug (11) from front manifold (9).
4. Remove rear manifold (18) and preformed packing (3) from coupling (4). Discard preformed packing (3).
5. Remove coupling (4) and preformed packing (5) from center manifold (14). Discard preformed packing (5).
6. Remove center manifold (14) and preformed packing (6) from coupling (7). Discard preformed packing (6).
7. Remove coupling (7) and preformed packing (8) from front manifold (9). Discard preformed packing (8).

c. Assembly

1. Install new preformed packing (3) and coupling (4) on rear manifold (18).
2. Install new preformed packing (5) and center manifold (14) on coupling (4).
3. Install new preformed packing (6) and coupling (7) on center manifold (14).
4. Install new preformed packing (8) and front manifold (9) on coupling (7).
5. Install plug (11) on front manifold (9).

6-3. WATER MANIFOLD MAINTENANCE (Contd)

6. Install water temperature sending unit (12) on front manifold (9).
7. Install adapter (19), adapter (20), and draincock (2) on rear manifold (18).

d. Installation

1. Install six new gaskets (17), rear manifold (18), center manifold (14), and front manifold (9) on cylinder head (15) with twelve new screw-assembled lockwashers (10).
2. Connect water temperature sending unit wire (13) to water temperature sending unit (12),
3. Position clamp (1) on heater hose (16).
4. Connect heater hose (16) to draincock (2). Tighten clamp (1).

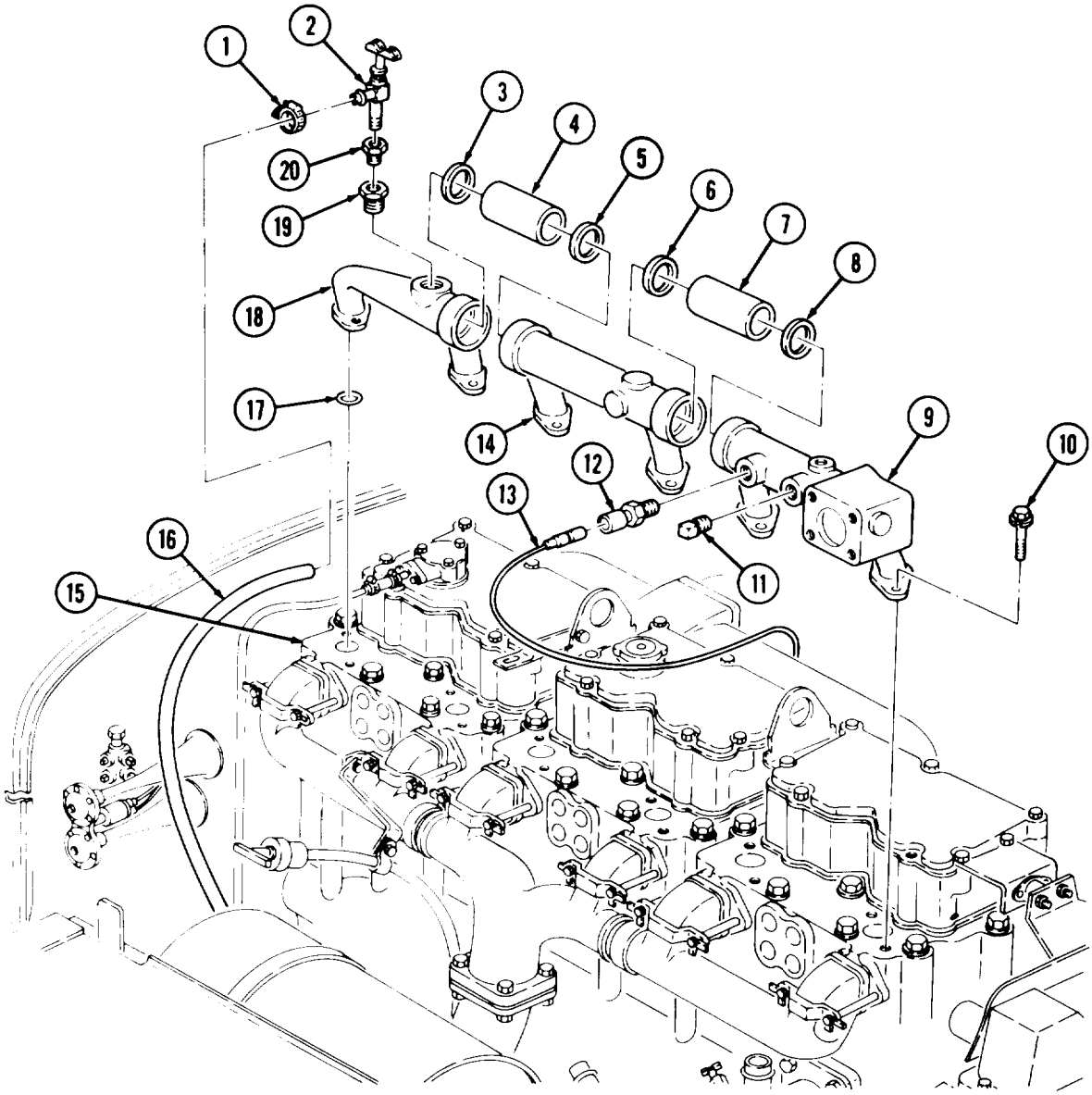

FOLLOW-ON TASKS: • Install surge tank (TM 9-2320-260-20).
• Install thermostat housing (TM 9-2320-260-20).

6-4. WATER PUMP MAINTENANCE

THIS TASK COVERS:

a. Removal
b. Cleaning and Inspection
c. Installation

INITIAL SETUP

APPLICABLE MODELS
All

TOOLS
General mechanic's tool kit
(Appendix B, Item 1)

MATERIALS/PARTS
Eight lockwashers (Appendix D, Item 215)
Gasket (Appendix D, Item 127)
Gasket (Appendix D, Item 128)

REFERENCES (TM)
TM 9-2320-260-20
TM 9-2320-260-34P-1
TM 750-254

EQUIPMENT CONDITION
- Water pump drivebelt removed (TM 9-2320-260-20).
- Engine coolant drained (TM 9-2320-260-20).

a. Removal

1. Remove six screws (7), lockwashers (8), washers (9), ring (5), gasket (4), and water pump (6) from water pump support (3). Discard lockwashers (8) and gasket (4).
2. Remove two screws (10), lockwashers (11), water pump support (3), and gasket (2) from engine block (l). Discard lockwashers (11) and gasket (2).

b. Cleaning and Inspection

1. For general cleaning instructions, refer to para. 2-8.
2. For general inspection instructions, refer to para. 2-9.

c. Installation

1. Install new gasket (2) and water pump support (3) on engine block (1) with two new lockwashers (11) and screws (10).
2. Install new gasket (4), ring (5), and water pump (6) on water pump support (3) with six washers (9), new lockwashers (8), and screws (7).

6-4. WATER PUMP MAINTENANCE (Contd)

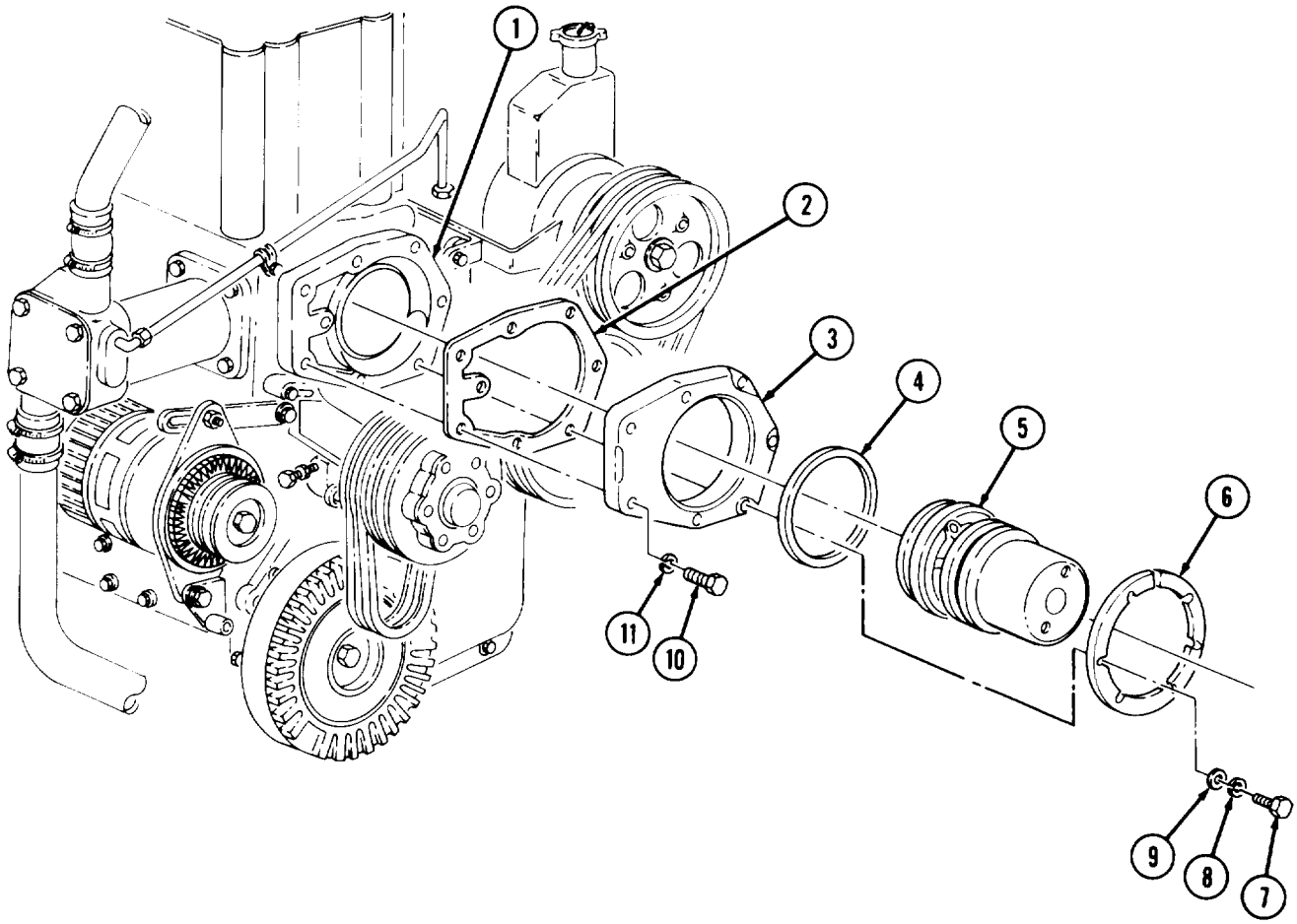

FOLLOW-ON TASKS:
- Fill engine coolant to proper level (TM 9-2320-260-20).
- Install water pump drivebelt (TM 9-2320-260-20).

CHAPTER 7

ELECTRICAL SYSTEM MAINTENANCE

Section I. Description and Data (page 7-1)
Section II. Wiring Harness Replacement (page 7-2)

Section I. DESCRIPTION AND DATA

7-1. DESCRIPTION AND DATA

a. This section provides description and data for the alternator, starter motor, and solenoid.

b. M809 series vehicles use alternators with an adjustable voltage range of 26 to 30 volts and maximum output of 60 or 100 amperes. Alternators are air-cooled by a fan located on the drive end directly behind the pulley. Alternator maintenance, repair, and testing are covered in TM 9-2920-225-34.

c. M809 series vehicles use a 24-volt starter motor. The starter motor has a piggy back mounted solenoid plunger and a pinion shifting mechanism which is totally enclosed. The motor is completely sealed. Starter motor maintenance, repair, and testing are covered in TM 9-2920-242-35, TM 9-2920-243-34, and TM 9-2920-248-35.

Table 7-1. Electrical System Tabulated Data.

NOTE

Three alternators are provided for M809 series vehicles.

1. ALTERNATOR

Make . . . . . Leece-Neville
Model (60 AMP) . . . .3002 AE
Model (100 AMP) 2184AC
Technical Manual . . . . TM 9-2920-225-34

Make . . . . . Prestolite
Model (60 AMP) . . . . AMA 5102-UT
Technical Manual . . . . . TM 9-2920-225-34

NOTE

Three starter motors are provided for M809 series vehicles.

2. STARTER MOTOR

Make . . . . . Delco-Remy
Model 1113847
Technical Manual . . . . . TM 9-2920-242-35

Make . . . . . Leece-Neville
Model M001-7260MA
Technical Manual . . . . TM 9-2920-243-34

Make . . . . . Prestolite
Model MES-6501-CUT
Technical Manual . . . . . TM 9-2920-248-35

Section II. WIRING HARNESS REPLACEMENT

7-2. WIRING HARNESS REPLACEMENT INDEX

PARA. NO.	TITLE	PAGE NO.
7-3.	Front Wiring Harness Replacement	7-2
7-4.	Rear Wiring Harness Replacement	7-22

7-3. FRONT WIRING HARNESS REPLACEMENT

THIS TASK COVERS:

a. Removal **b. Installation**

INITIAL SETUP

APPLICABLE MODELS
All

TOOLS
General mechanic's tool kit (Appendix B, Item 1)
Torque wrench 318 in. dr. (Appendix B, Item 4)
Tool kit, electrical (Appendix B, Item 106)

MATERIALS/PARTS
Three locknuts (Appendix D, Item 189)
Four locknuts (Appendix D, Item 181)
Four locknuts (Appendix D, Item 170)
Two lockwashers (Appendix D, Item 254)
Lockwasher (Appendix D, Item 217)
Four lockwashers (Appendix D, Item 215)
Fourteen lockwashers (Appendix D, Item 255)

MATERIALS/PARTS (Contd)
Tiedown straps (as required) (Appendix C, Item 29)
Sealing compound (Appendix C, Item 44)

PERSONNEL REQUIRED
Two

REFERENCES (TM)
TM 9-2320-260-10
TM 9-2320-260-20
TM 9-2320-260-34P-1

EQUIPMENT CONDITION
- Hood raised and secured (TM 9-2320-260-10).
- Battery ground cables disconnected (TM 9-2320-260-20).

7-3. FRONT WIRING HARNESS REPLACEMENT (Contd)

a. Removal

NOTE

- Left and right composite lights are connected the same. Steps 1 through 4 cover the left side harness removal.
- Tag all leads for installation.
- Remove and discard tiedown straps as required.

1. Pull front wiring harness (4) from behind protective cover (9).
2. Disconnect three harness wires (6) from composite light wires (7).
3. Remove two locknuts (3), clamps (2) and (5), and two screws (1) from left fender (8). Discard locknuts (3).
4. Remove clamps (2) and (5) from front wiring harness (4),

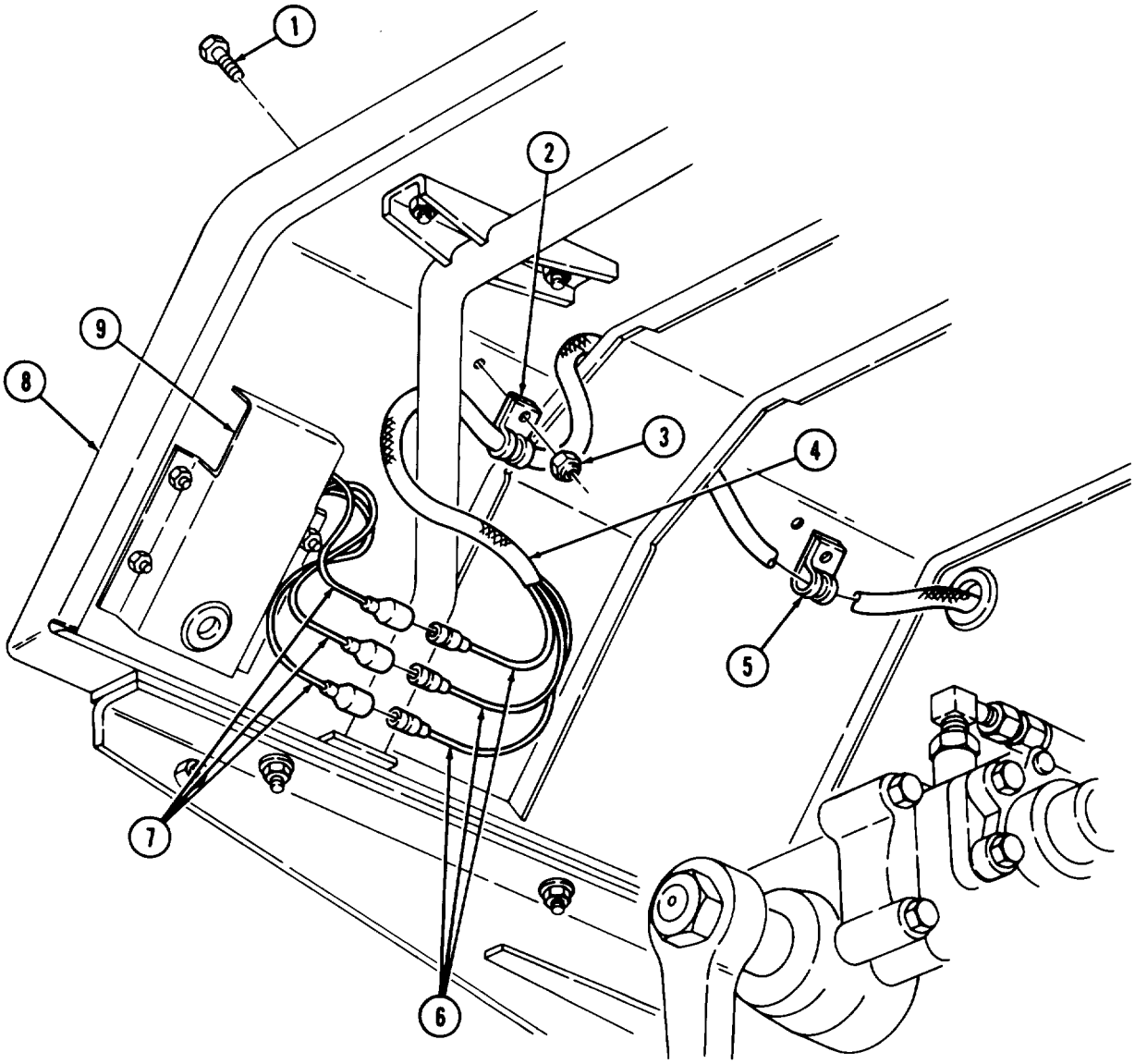

7-3. FRONT WIRING HARNESS REPLACEMENT (Contd)

5. Disconnect wire (12) from blackout headlight (13).
6. Disconnect Wires (1) and (2) from left. headlight (3).
7. Remove locknut (7), clamp (6), wire (4), two lockwashers (8), and screw (11) from left fender (10). Discard locknut (7) and lockwashers (8).
8. Remove clamp (6) from front wiring harness (5).
9. Bend open three clips (9) and remove front wiring harness (5) from clips (9).
10. Remove nut (38) and wire (41) from fuel solenoid (37).
11. Remove wire (42) from clip (44) on fuel return tube (43).
12. Disconnect wire (40) from cold start lead (39).
13. Remove screw (20), lockwasher (19), clamp (21), and washer (45) from air intake manifold (18). Discard lockwasher (19).
14. Remove clamp (21) from front wiring harness (5).
15. Remove nut (15), lockwasher (16), and terminal lug (17) from glow-plug (14). Discard lockwasher (16).

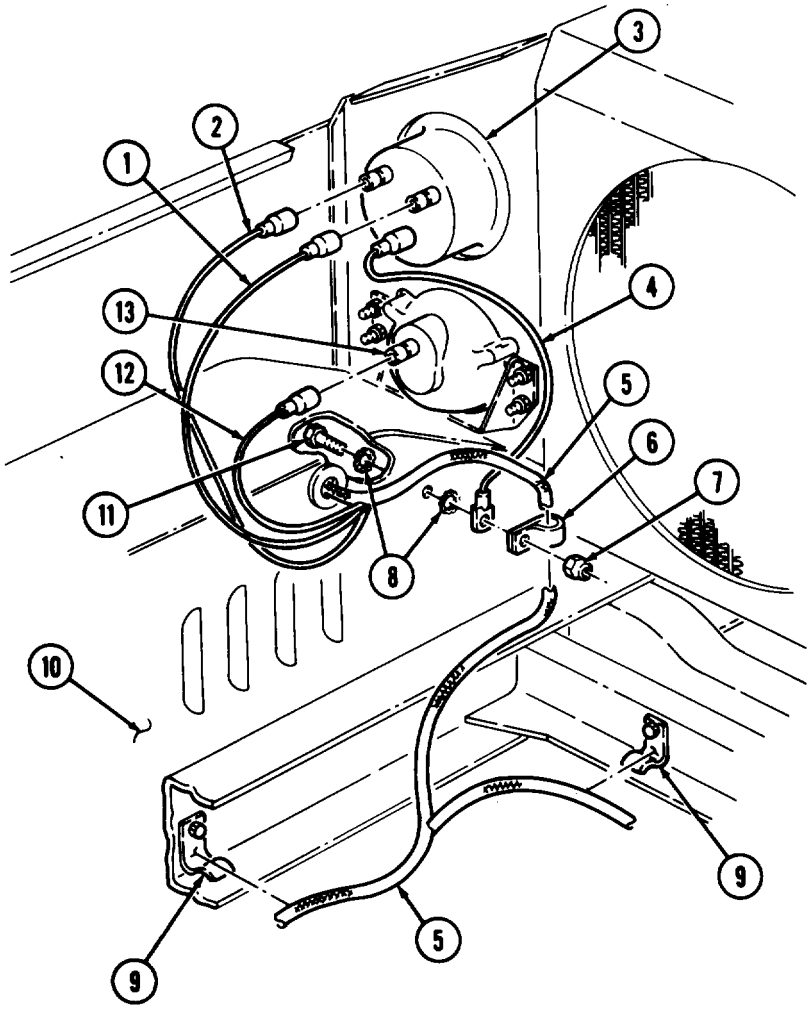

7-3. FRONT WIRING HARNESS REPLACEMENT (Contd)

16. Remove nut (33), lockwasher (32), and ground strap (31) from starter (26). Discard lockwasher (32).
17. Remove screw (23), clip (22), and wire (30) from starter (26).
18. Remove nut (35), lockwasher (34), and wire (36) from starter (26). Discard lockwasher (34).
19. Remove locknut (29), screw (25) and clamps (28) and (24) from left frame rail (27). Discard locknut (29).
20. Remove clamp (28) from front wiring harness (5).

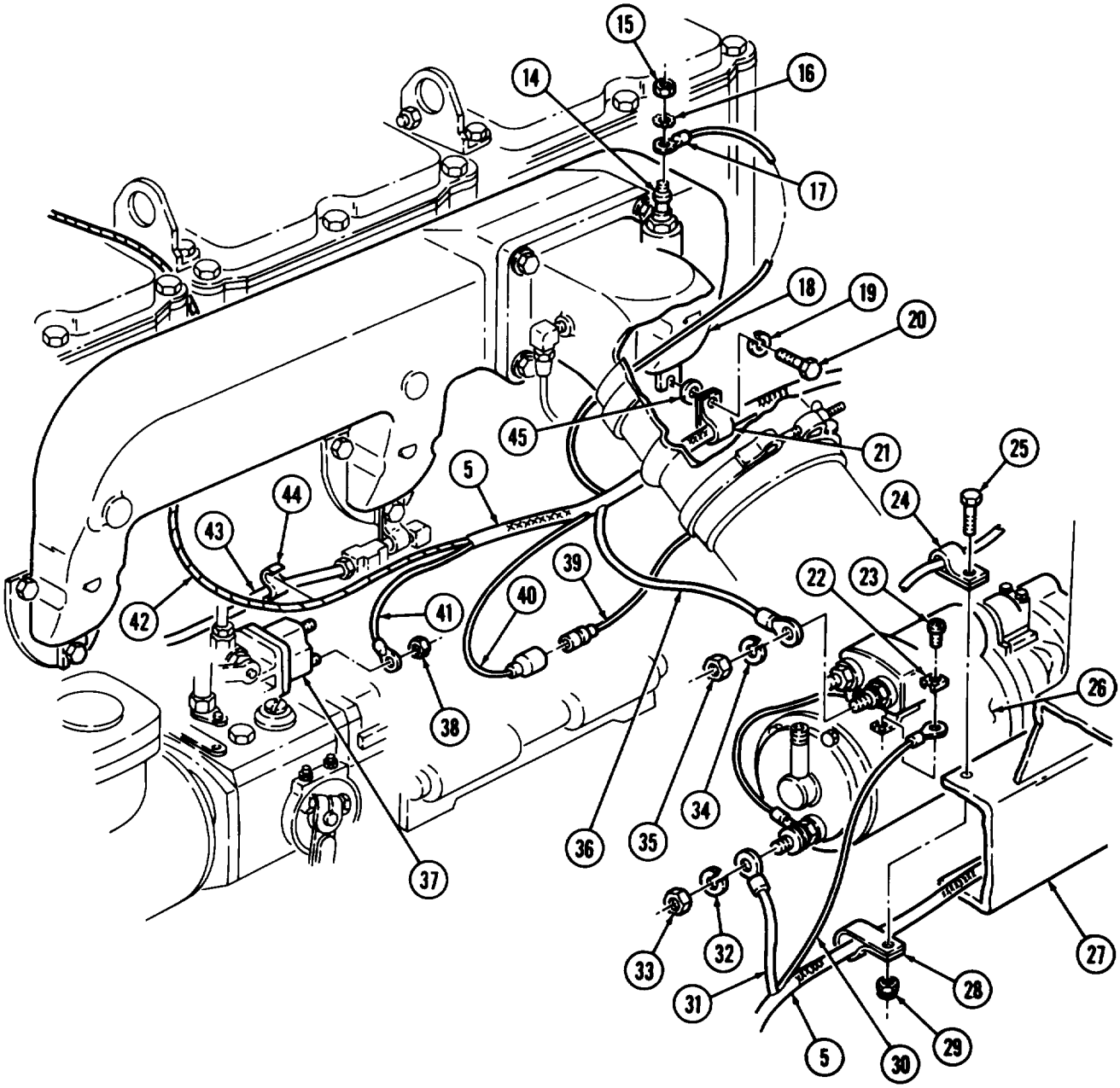

7-3. FRONT WIRING HARNESS REPLACEMENT (Contd)

21. Disconnect wires (8) and (7) from right headlight (6).
22. Remove locknut (15), screw (10), clamps (16) and (18), ground wire (11), and two lockwashers (13) from right fender (17) and brace (12). Discard locknut (15) and lockwashers (13).
23. Remove clamps (16) and (18) from front wiring harness (14).
24. Remove locknut (19), screw (9), and clamp (20) from front crossmember (21). Discard locknut (19).
25. Remove clamp (20) from front wiring harness (14).
26. Bend open clip (22) and remove front wiring harness (14).
27. Remove two screws (4) and lockwashers (3) from terminal cover (5) and alternator (23). Discard lockwashers (3).
28. Pry terminal cover (5) away from sealing compound and remove cover (5) from alternator (23).
29. Remove two screws (31), lockwashers (32), retaining strap (30), and spacer plates (29) and (30) from alternator (23). Discard lockwashers (32).

NOTE

All sealing compound must be removed prior to removing wires.

30. Disconnect lead (24) from wire (25).
31. Remove screw (28), lockwasher (27), and ground wire (26) from alternator (23). Discard lockwasher (27).
32. Remove nut (35), lockwasher (34), and positive wire (33) from alternator (23). Discard lockwasher (34),
33. Disconnect wire (1) from temperature sending unit (2).

7-3. FRONT WIRING HARNESS REPLACEMENT (Contd)

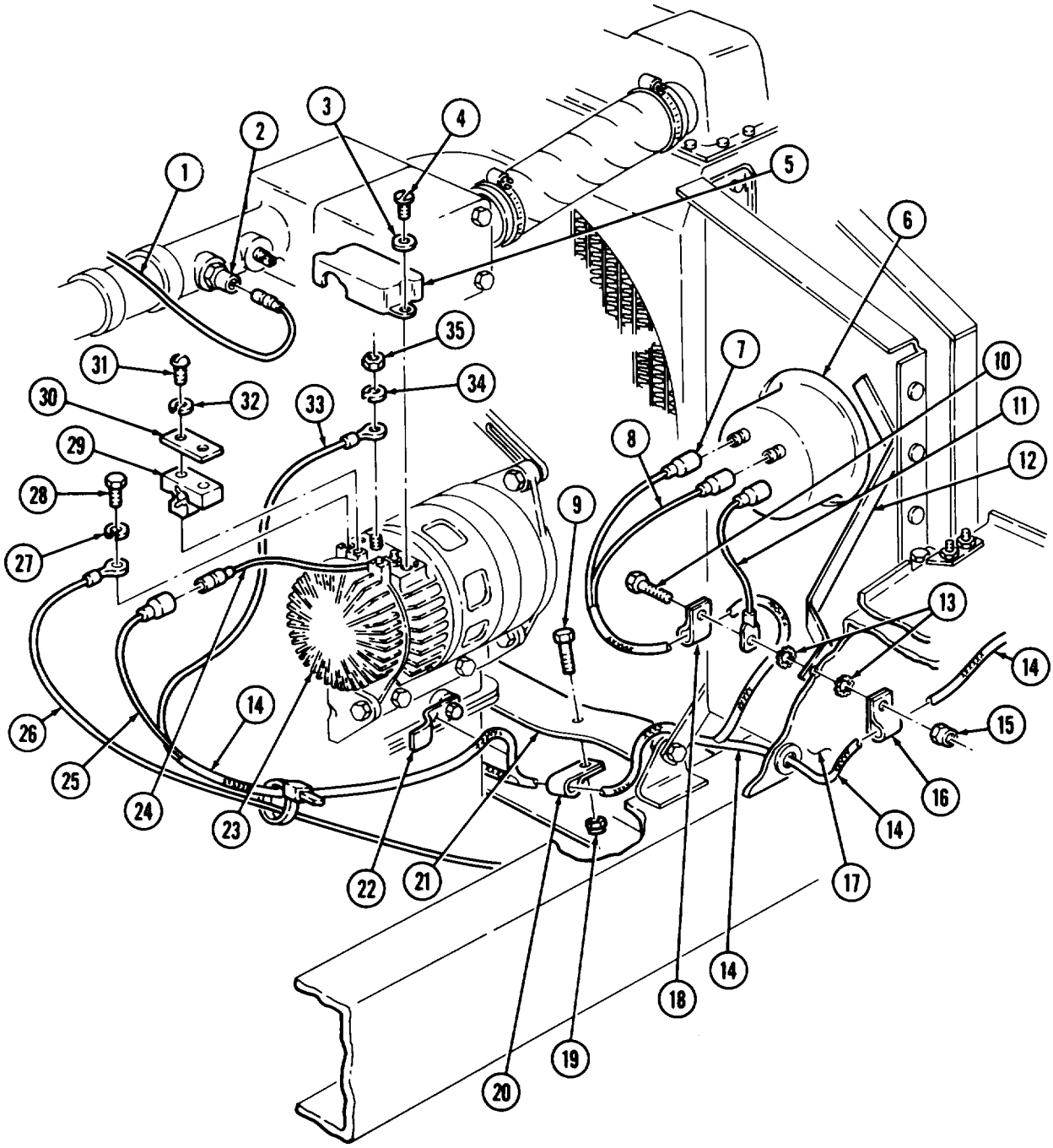

7-3. FRONT WIRING HARNESS REPLACEMENT (Contd)

34. Disconnect wires (2) and (3) from horn solenoid (1).
35. Bend open two clips (4) and remove front wiring harness (11).
36. Remove three screws (6), clips (7), and wires (8), (9), and (10) from relay (31).
37. Remove screw (25), lockwashers (26) and (28), and ground wire (27) from protective control box (32) and bracket (5). Discard lockwashers (28) and (26).
38. Disconnect front wiring harness (11) from protective control box (32).
39. Remove screw (24), ground wire (23), and Iockwasher (29) from turn signal flasher (30) and bracket (5). Discard lockwasher (29).
40. Disconnect front wiring harness (11) from turn signal flasher (30).
41. Disconnect wires (17), (18), (19), and (20) from two circuit breakers (16).

NOTE

- Perform step 42 for M816 and M819 vehicles.
- Assistant will help with step 42.

42. Disconnect wire (34) from wire assembly (33).
43. Remove two locknuts (12), washers (14), screws (22), and grommet (13) from firewall (15). Discard locknuts (12).
44. Bend open clip (21) and remove front wiring harness (11).

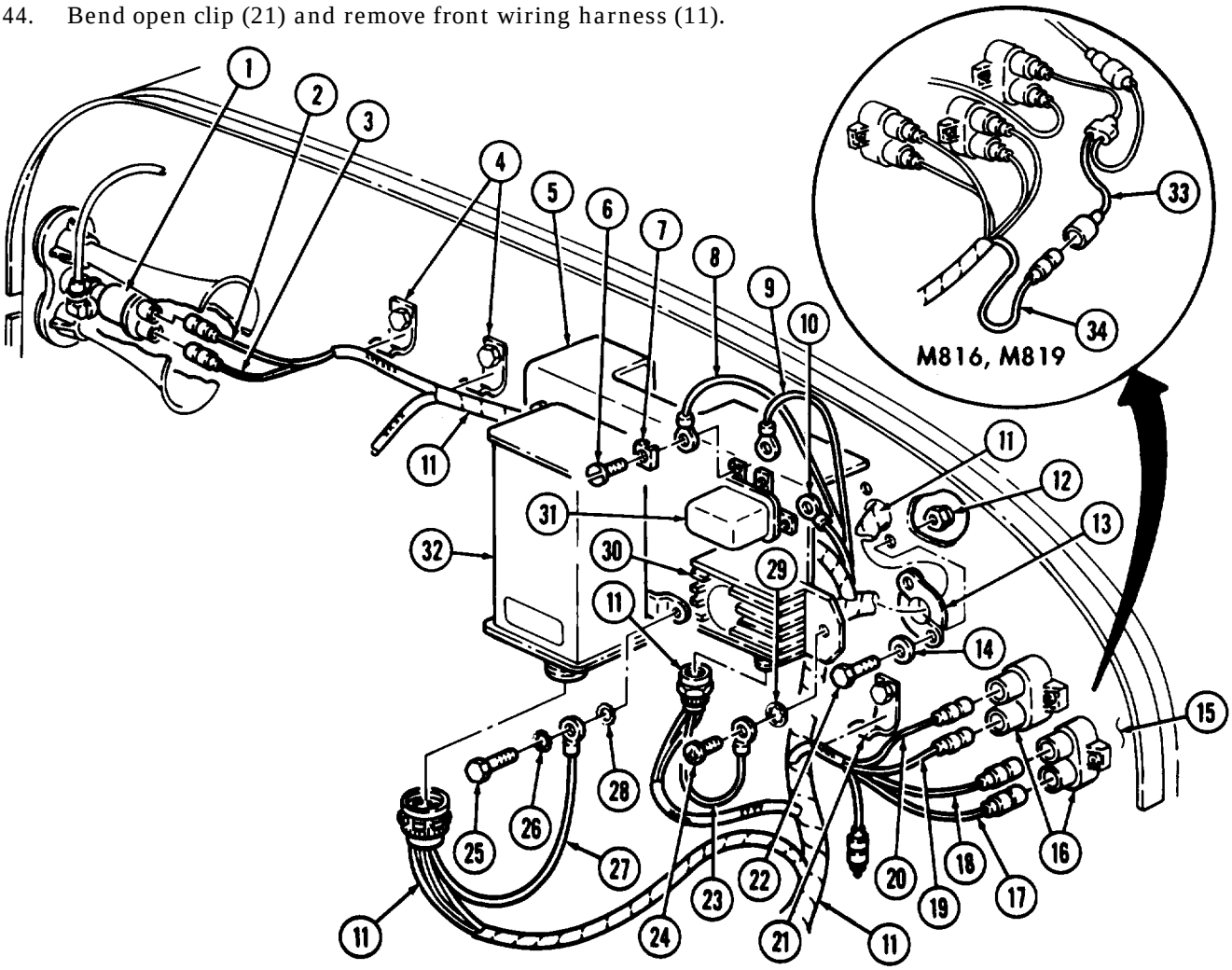

7-3. FRONT WIRING HARNESS REPLACEMENT (Contd)

45. Remove three nuts (37), wires (35), (36), (38), (39), (43), and (44) from terminals (40), (41), and (42).
46. Disconnect wire (62) from contact brush cover (61).
47. Remove locknut (53), screw (56), and clamp (54) from bracket (55). Discard locknut (53).
48. Remove clamp (54) from front wiring harness (11).
49. Disconnect rear wiring harness receptacle (57) from front wiring harness receptacle (63).
50. Remove four nuts (58), lockwashers (59), screws (64), and front wiring harness receptacle (63) from bracket (60). Discard lockwashers (59).

NOTE

Assistant will help with step 51.

51. Remove locknut (51), screw (45), and clamp (50) from cab floor (52). Discard locknut (51).
52. Remove clamp (50) from front wiring harness (11).
53. Disconnect wires (47), (48), and (49) from dimmer switch (46).

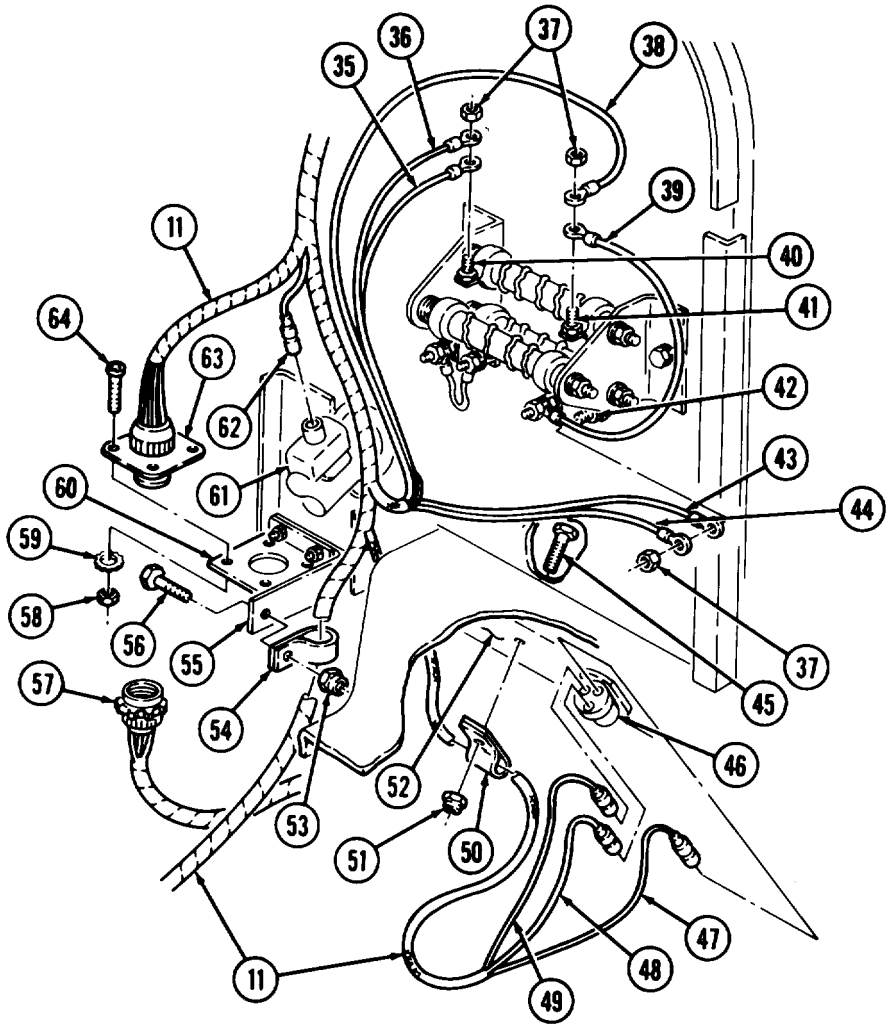

7-3. FRONT WIRING HARNESS REPLACEMENT (Contd)

54. Disconnect wire (2) from engine temperature gage (1).
55. Disconnect wires (3) and (4) from panel lights (39) and (38).
56. Disconnect wire (7) from high beam indicator (37).
57. Disconnect front wiring harness lead (35) from wire (36).
58. Disconnect wire (8) from oil pressure lock-out switch (9).
59. Disconnect wire (5) from air pressure switch (6).
60. Disconnect wires (27) and (26) from circuit breaker (28).

NOTE

Step 61 applies to M816, M817, and M818 vehicles equipped with dual fuel tanks.

61. Disconnect wires (10) and (33) from fuel selector switch (34).
62. Disconnect wires (19) and (20) from preheater switch (24).
63. Disconnect wire (17) from preheater indicator (16).
64. Disconnect wires (21) and (22) from ignition switch (23).
65. Disconnect wires (12), (13), and (15) from battery switch (11).
66. Disconnect front wiring harness connector (18) from headlight switch (25).
67. Remove nut (30) and screw (32) from tiedown strap (31).
68. Remove tiedown strap (31) from front wiring harness (14) and steering column (29).
69. Disconnect connector plug (41) from turn signal switch (40).

7-3. FRONT WIRING HARNESS REPLACEMENT (Contd)

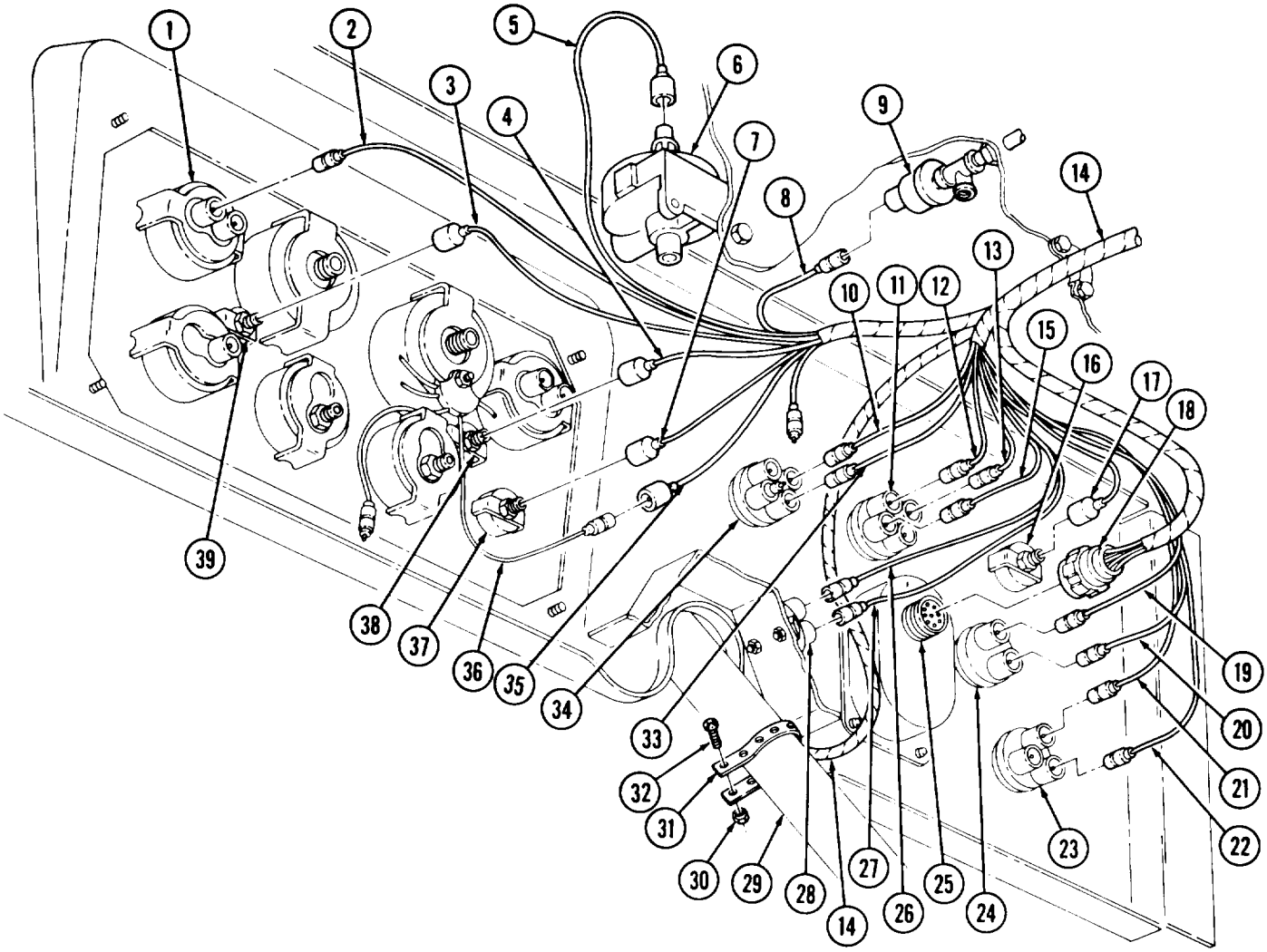

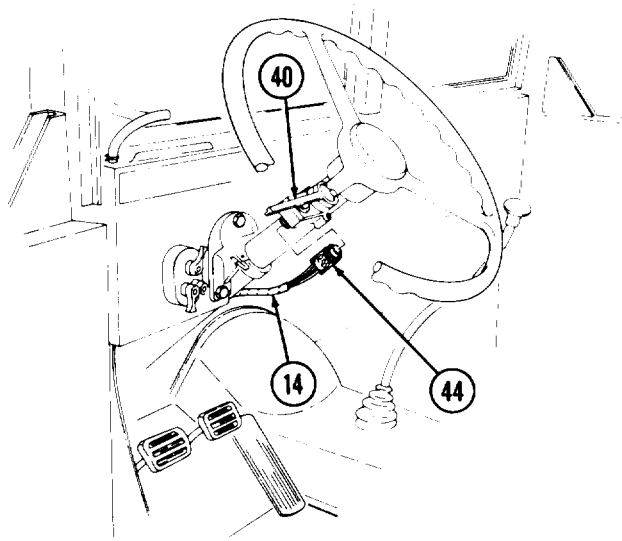

7-3. FRONT WIRING HARNESS REPLACEMENT (Contd)

CAUTION

Use care when removing front wiring harness from vehicle. Pulling and snagging may cause damage to harness.

NOTE

Assistant will help with step 70.

70. Remove front wiring harness (3) from front crossmember (2), left side frame (1), right side frame (4), firewall (7), dash (6), and steering column (5).

b. Installation

CAUTION

Use care when routing front wiring harness into vehicle. Pulling and snagging may cause damage to harness.

NOTE

- If new front wiring harness is to be installed, remove all tags from old harness and install on new harness.
- Assistant will help with step 1.

1. Lay out and position front wiring harness (3) on steering column (5), dash (6), firewall (7), left side frame (1), right side frame (4), and front crossmember (2).

7-3. FRONT WIRING HARNESS REPLACEMENT (Contd)

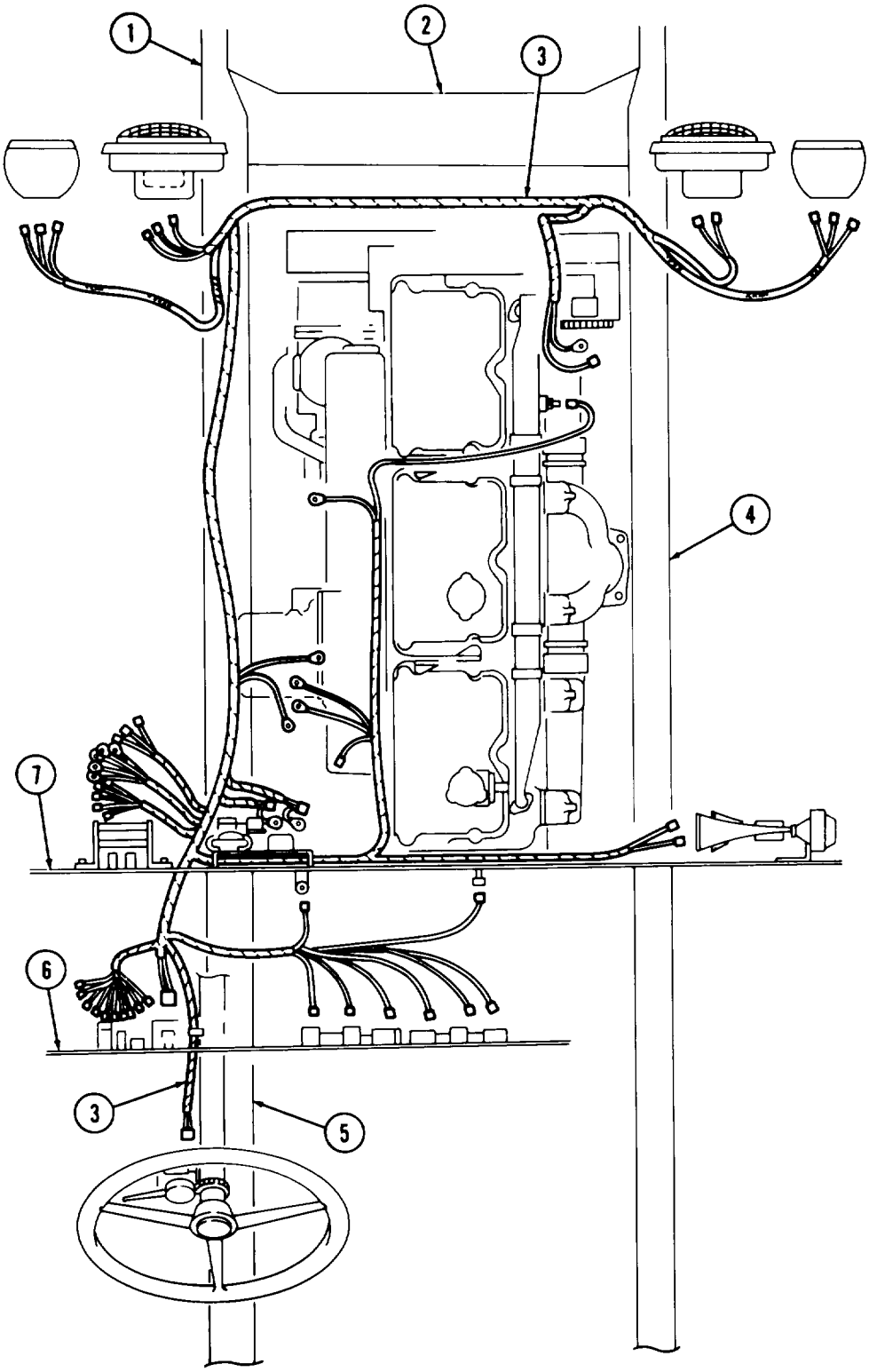

7-3. FRONT WIRING HARNESS REPLACEMENT (Contd)

NOTE

Install tiedown straps as required.

2. Connect connector plug (41) to turn signal switch (40).
3. Install front wiring harness (14) on steering column (29) with tiedown strap (31), screw (32), and nut (30).
4. Connect front wiring harness connector (18) to headlight switch (25).
5. Connect wires (12), (13), and (15) to battery switch (11).
6. Connect wires (21) and (22) to ignition switch (23).
7. Connect wire (17) to preheater indicator (16).
8. Connect wires (19) and (20) to preheater switch (24).

NOTE

Step 9 applies to M816, M817, and M818 vehicles equipped with dual fuel tanks.

9. Connect wires (10) and (33) to fuel selector switch (34).
10. Connect wires (26) and (27) to circuit breaker (28).
11. Connect wire (5) to air pressure switch (6).
12. Connect wire (8) to oil pressure lock-out switch (9).
13. Connect front wiring harness lead (35) to wire (36).
14. Connect wire (7) to high beam indicator (37).
15. Connect wires (3) and (4) to panel lamps (38) and (39).
16. Connect wire (2) to engine temperature gage (1).

7-3. FRONT WIRING HARNESS REPLACEMENT (Contd)

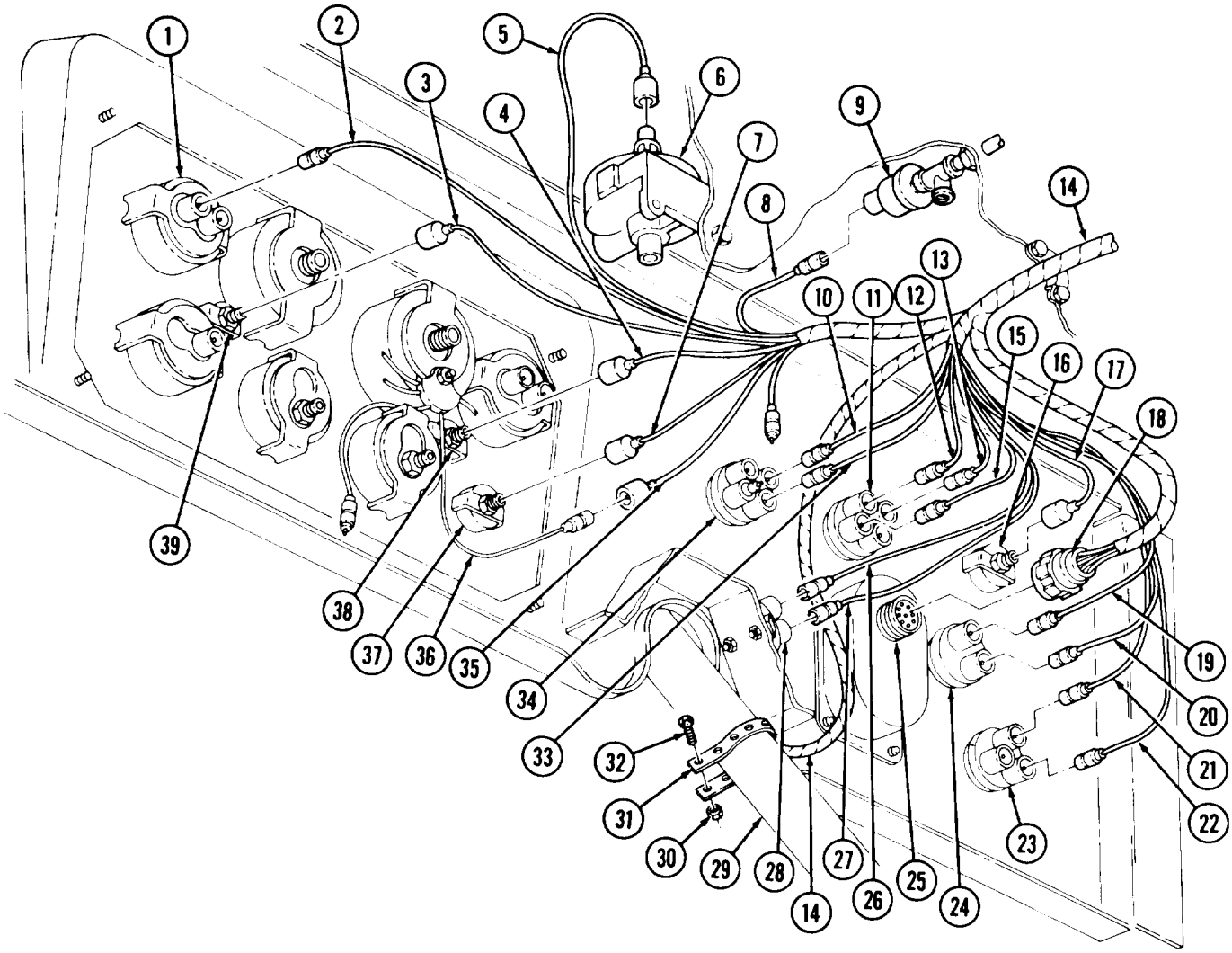

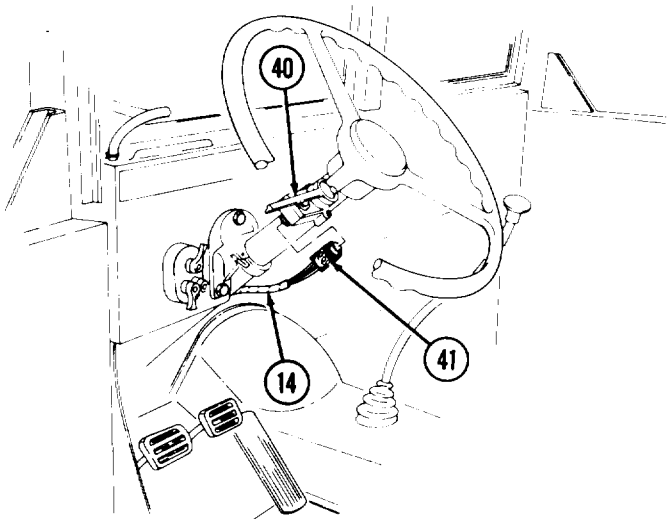

7-3. FRONT WIRING HARNESS REPLACEMENT (Contd)

17. Connect wires (13), (14), and (15) to dimmer switch (12).

NOTE

Assistant will help with step 18.

18. Place clamp (17) over front wiring harness (16) and install on cab floor (18) with screw (11) and new locknut (19).
19. Install front wiring harness receptacle (30) on bracket (27) with four screws (31), new lockwashers (26), and nuts (25).
20. Connect rear wiring harness receptacle (24) to front wiring harness receptacle (30).
21. Place clamp (21) over front wiring harness (16) and install on bracket (22) with screw (23) and new locknut (20).
22. Connect wire (29) to contact brush cover (28).
23. Install wires (9) and (10) on terminal (8) with nut (3).
24. Install wires (4) and (5) on terminal (7) with nut (3).
25. Install wires (1) and (2) on terminal (6) with nut (3).

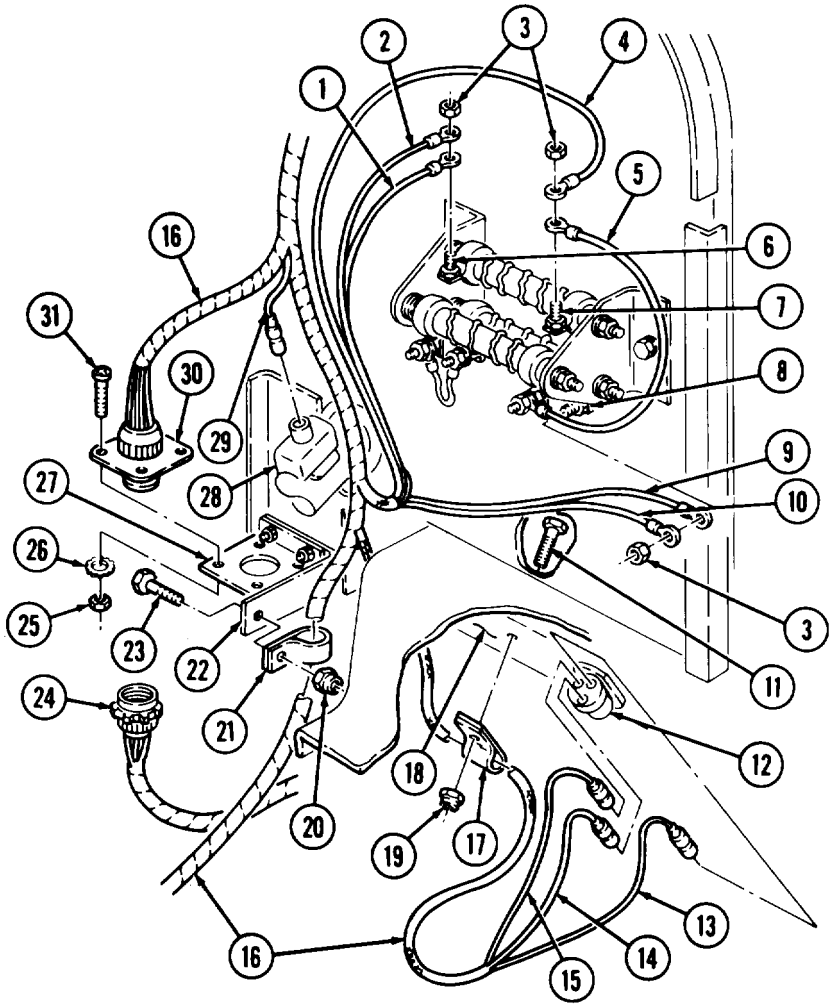

7-3. FRONT WIRING HARNESS REPLACEMENT (Contd)

26. Place front wiring harness (16) on clip (51). Bend clip (51).

NOTE

Assistant will help with step 27.

27. Place two grommet halves (43) around front wiring harness (16) and install on firewall (44) with two screws (52), washers (45), and new locknuts (42).

NOTE

Perform step 28 for M816 and M819 vehicles.

28. Connect wire (64) to wire assembly (63).
29. Connect wires (47), (48), (49), and (50) to two circuit breakers (46).
30. Connect front wiring harness (16) to turn signal flasher (60).
31. Install ground wire (53) on flasher (60) and bracket (36) with screw (54) and new lockwasher (59).
32. Install wires (39), (40), and (41) on relay (61) with three clips (7) and screws (37).
33. Connect front wiring harness (16) to protective control box (62).
34. Install ground wire (57) on control box (62) and bracket (36) with new lockwasher (58), new lockwasher (56), and screw (55).
35. Install front wiring harness (16) on two clips (35). Bend clips (35).
36. Install wires (33) and (34) to horn solenoid (32).

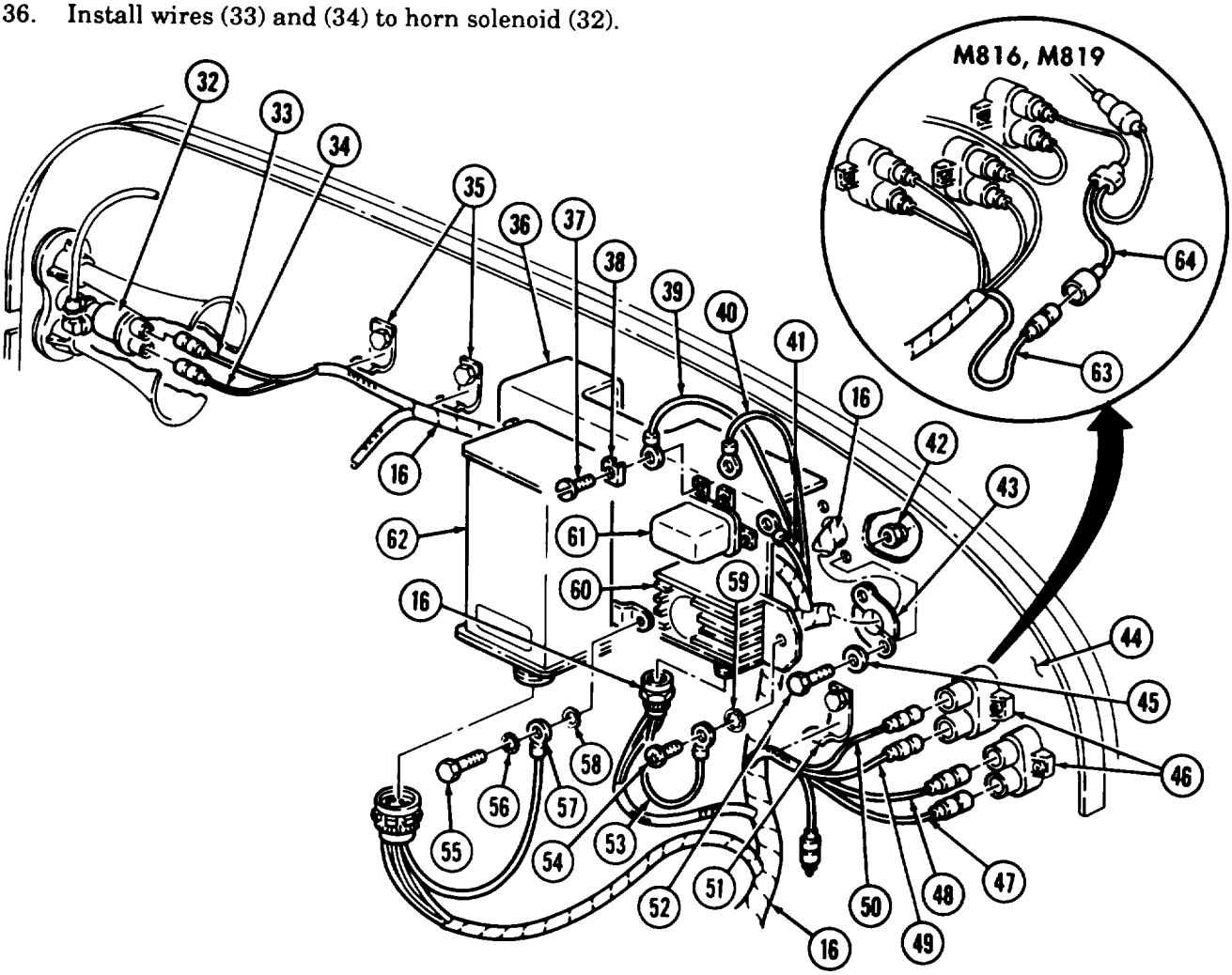

7-3. FRONT WIRING HARNESS REPLACEMENT (Contd)

37. Connect wire (1) to temperature sending unit (2).
38. Connect lead (24) to wire (25).

NOTE

Ensure terminals are clean before connections are made.

39. Insert wires (33) and (26) through spacer plate (29).
40. Install ground wire (26) on alternator (23) with new lockwasher (27) and screw (28).
41. Install positive wire (33) on alternator (23) with new lockwasher (34) and nut (35).
42. Install two spacer plates (29) and (32) on alternator (23) with new lockwashers (30) and screws (31).
43. Apply sealing compound to wire lead (26) and inside terminal cover (5).
44. Install terminal cover (5) on alternator (23) with two new lockwashers (3) and screws (4).
45. Place front wiring harness (14) on clip (22). Bend clip (22).
46. Place clamp (20) over front wiring harness (14) and install on front crossmember (21) with screw (9) and new locknut (19).
47. Place clamps (16) and (18) over front wiring harness (14) and install ground wire (11) and clamps (16) and (18) on right fender (17) and brace (12) with screw (10), two new lockwashers (13), and new locknut (15).
48. Connect wires (8) and (7) to right headlight (6).

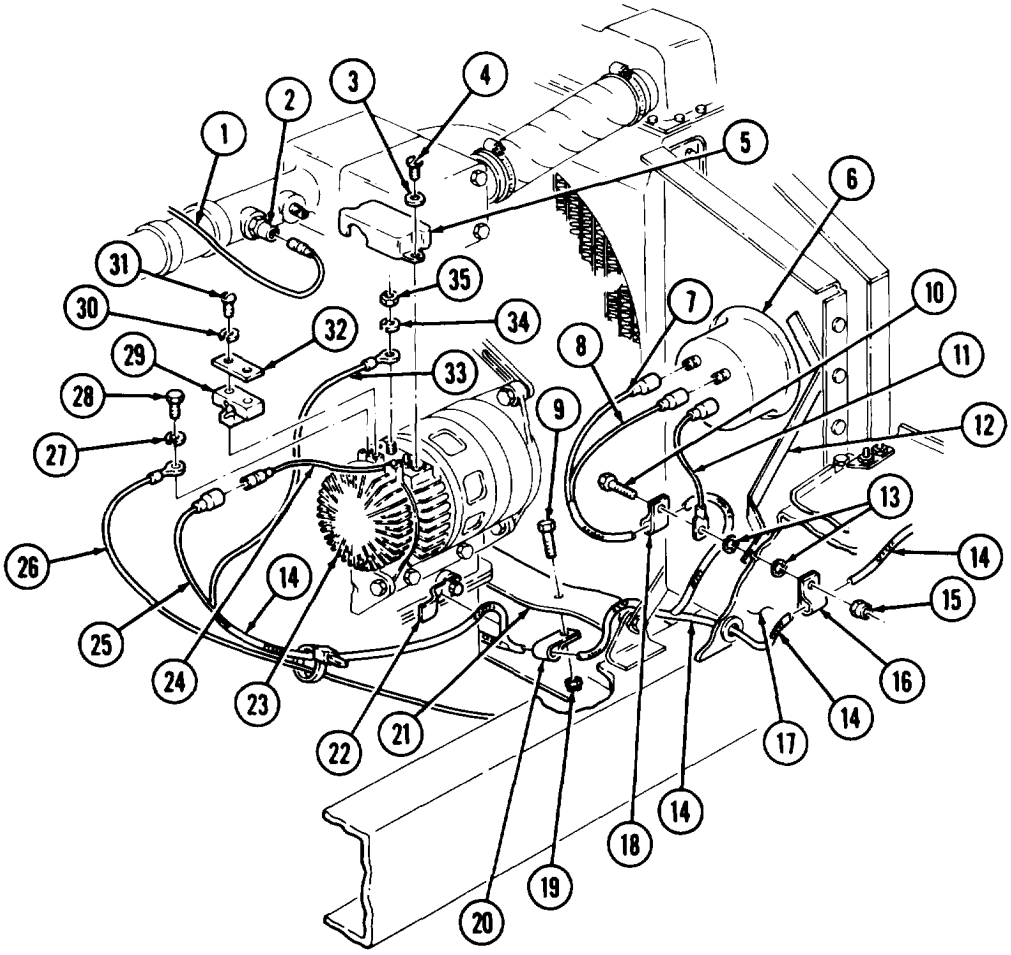

7-3. FRONT WIRING HARNESS REPLACEMENT (Contd)

49. Install ground wire (54) on starter (48) with new lockwasher (55) and nut (56).
50. Install wire (52) on starter (48) with clip (44) and screw (45).
51. Install wire (59) on starter (48) with new lockwasher (57) and nut (58).
52. Place clamps (46) and (50) over front wiring harness (14) and install on left frame rail (49) with screw (47) and new locknut (51).
53. Install wire (64) on fuel solenoid (60) with nut (61).
54. Install wire (65) on fuel return tube (66) with clip (67).
55. Connect wire (62) to cold start lead (63).
56. Place clamp (43) over front wiring harness (14) and install on air intake manifold (40) with washer (68), new lockwasher (41), and screw (42).
57. Install terminal lug (39) on glow-plug (36) with new lockwasher (38) and nut (37).

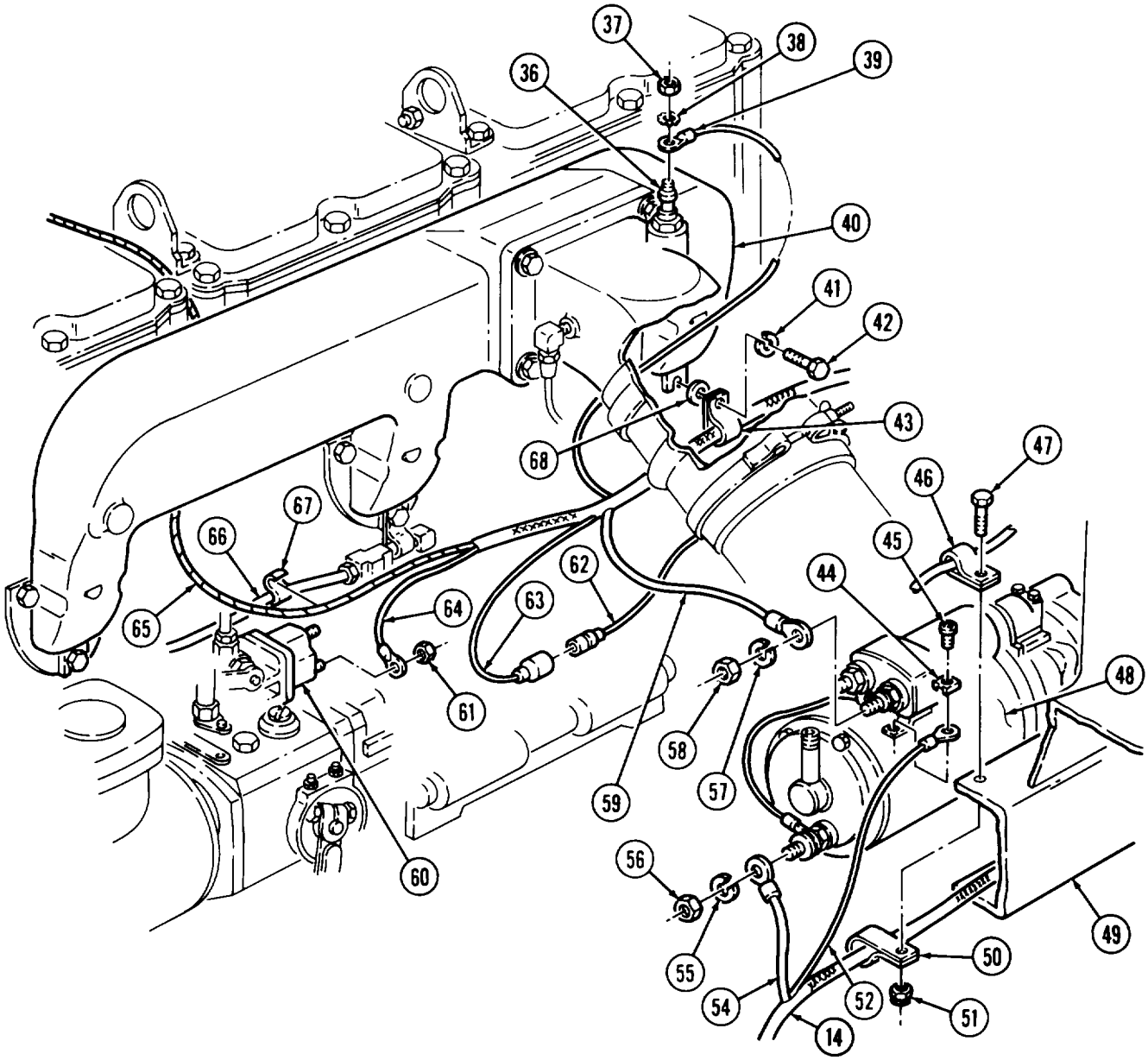

7-3. FRONT WIRING HARNESS REPLACEMENT (Contd)

58. Install front wring harness (5) on three clips (8). Bend clips (8).
59. Place clamp (6) over front wiring harness (5) and install wire (4) and clamp (6) on left fender (10) with screw (11), two new lockwashers (9), and new locknut (7).
60. Connect wire (12) to blackout headlight (13).
61. Connect wires (1) and (2) on left headlight (3).

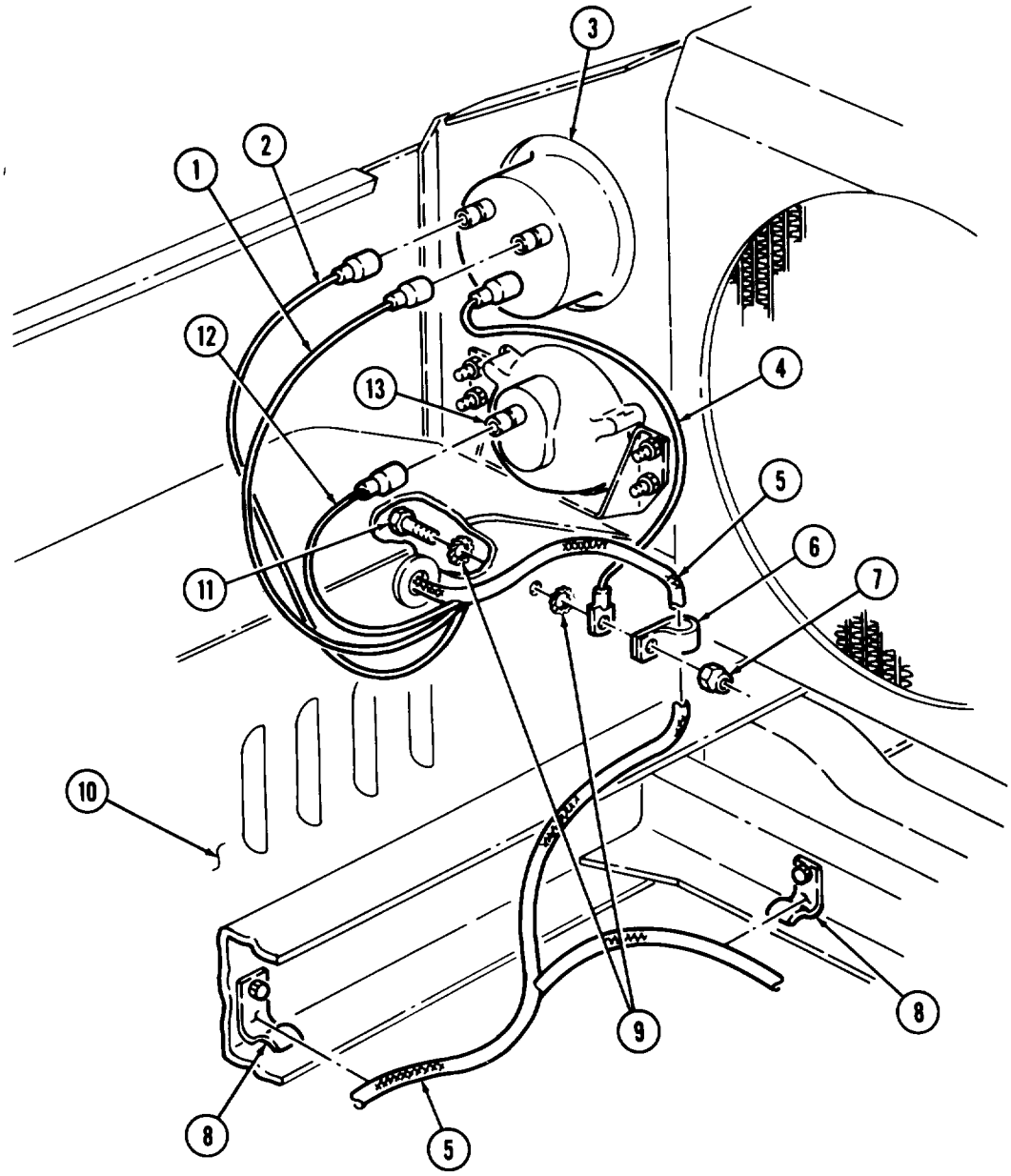

7-3. FRONT WIRING HARNESS REPLACEMENT (Contd)

NOTE

Left and right composite lights are connected the same. Steps 62 through 64 cover the left side harness installation.

62. Place clamps (15) and (17) over front wiring harness (5) and install on left fender (20) with two screws (14) and new locknuts (16).
63. Connect three composite light wires (19) to three harness wires (18.
64. Put end of harness (5) inside protective cover (21).

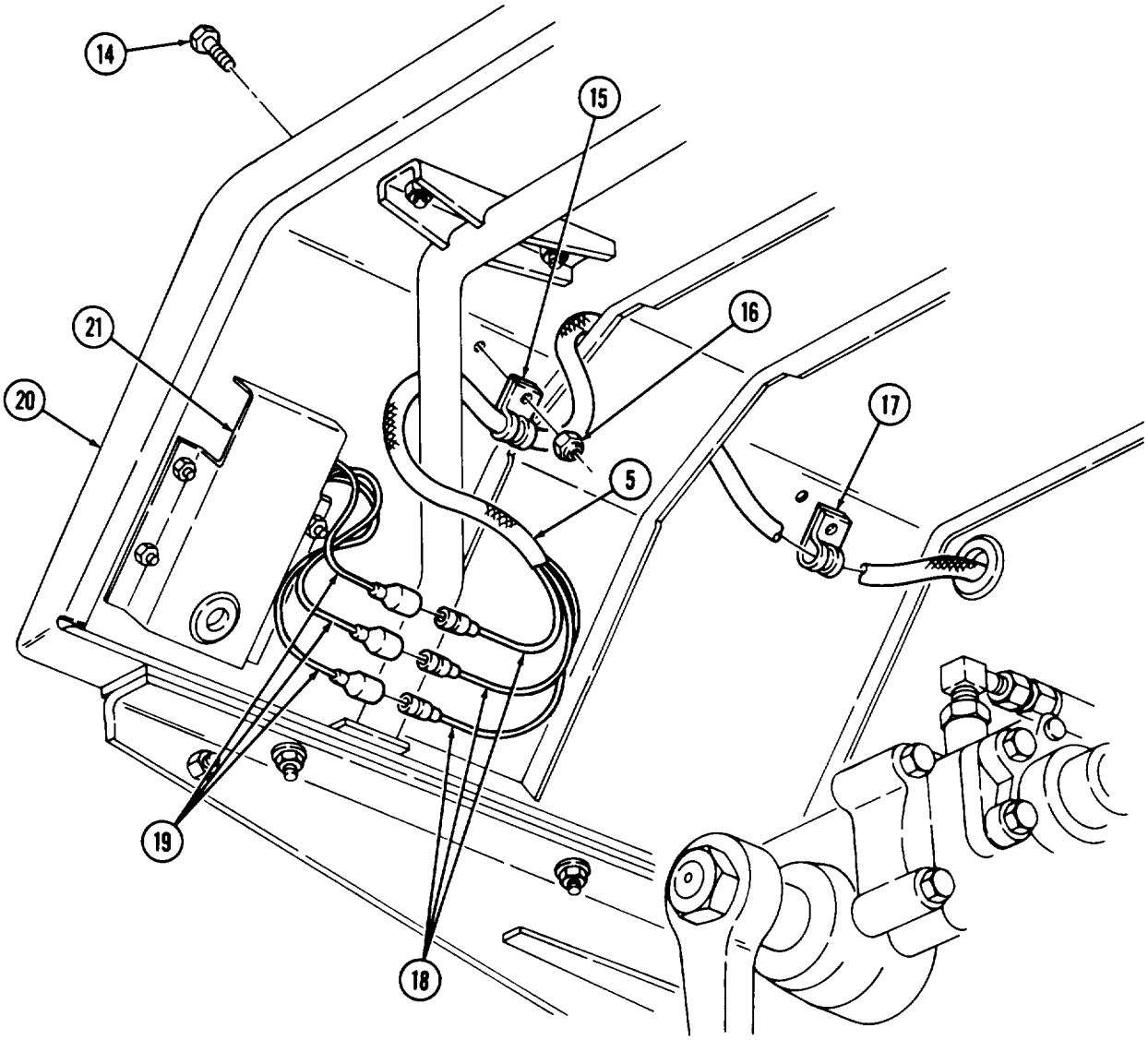

FOLLOW-ON TASK: Connect battery ground cables (TM 9-2320-260-20).

7-4. REAR WIRING HARNESS REPLACEMENT

THIS TASK COVERS:

a. Removal **b. Installation**

INITIAL SETUP

APPLICABLE MODELS
All

TOOLS
General mechanic's tool kit (Appendix B, Item 1)
Tool kit, electrical (Appendix B, Item 106)

MATERIALS/PARTS
One locknut (Appendix D, Item 181)
Three locknuts (Appendix D, Item 166)
Four locknuts (Appendix D, Item 168)
One lockwasher (Appendix D, Item 252)
TWO locknuts (M818) (Appendix D, Item 181)
Five locknuts (M818) (Appendix D, Item 176)

MATERIAl.S/PARTS (Contd)
Two lockwashers (M818) (Appendix D, Item 219)
Eight locknuts (M819) (Appendix D, Item 166)
Eight locknuts (M819) (Appendix D, Item 172)
Two lockwashers (M819) (Appendix D, Item 252)

REFERENCES (TM)
TM 9-2320-260-10
TM 9-2320-260-20
TM 9-2320-260-34P-1

EQUIPMENT CONDITION
- Hood raised and secured (TM 9-2320-260-10).
- Battery ground cables disconnected (TM 9-2320-260-20).

NOTE

Tag all wires for installation.

1. Disconnect rear wiring harness receptacle (2) from front wiring harness receptacle (1).

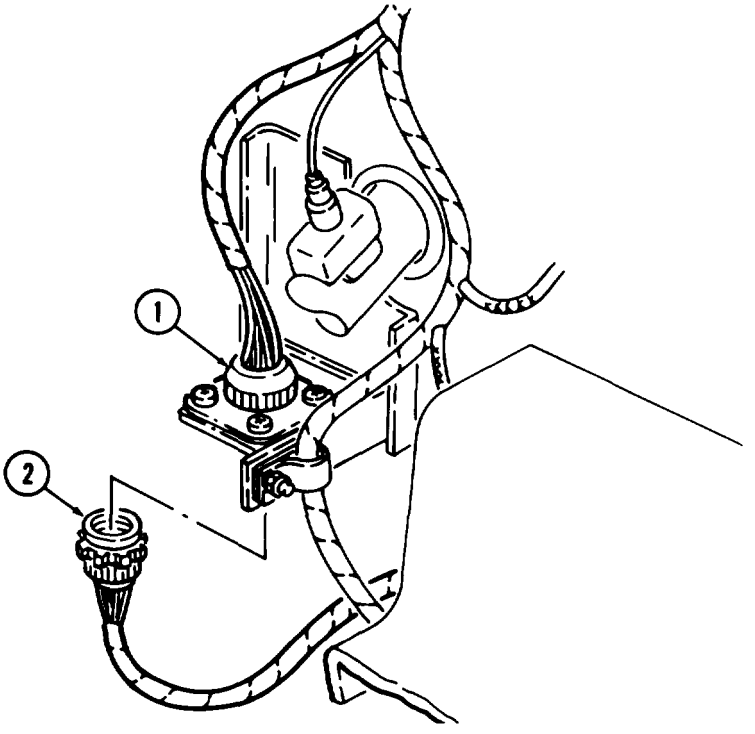

7-4. REAR WIRING HARNESS REPLACEMENT (Contd)

2. Remove locknut (8), screw (5), and clamp (6) from cab support (7). Discard locknut (8).
3. Remove clamp (6) from rear wiring harness (15).

NOTE

Steps 4 through 6 apply to vehicles with stoplight switch mounted on air pack.

4. Disconnect two wires (3) from stoplight switch (4).
5. Remove locknut (16), clamp (17), and screw (18) from left frame rail (19). Discard locknut (16).
6. Remove clamp (17) from rear wiring harness (15),

NOTE

Steps 7 through 9 apply to vehicles with stoplight switch mounted on left frame rail.

7. Disconnect two wires (14) from stoplight switch (11).
8. Remove locknut (13), clamp (12), and screw (10) from left frame rail (9) and stoplight switch (11). Discard locknut (13).
9. Remove clamp (12) from rear wiring harness (15).

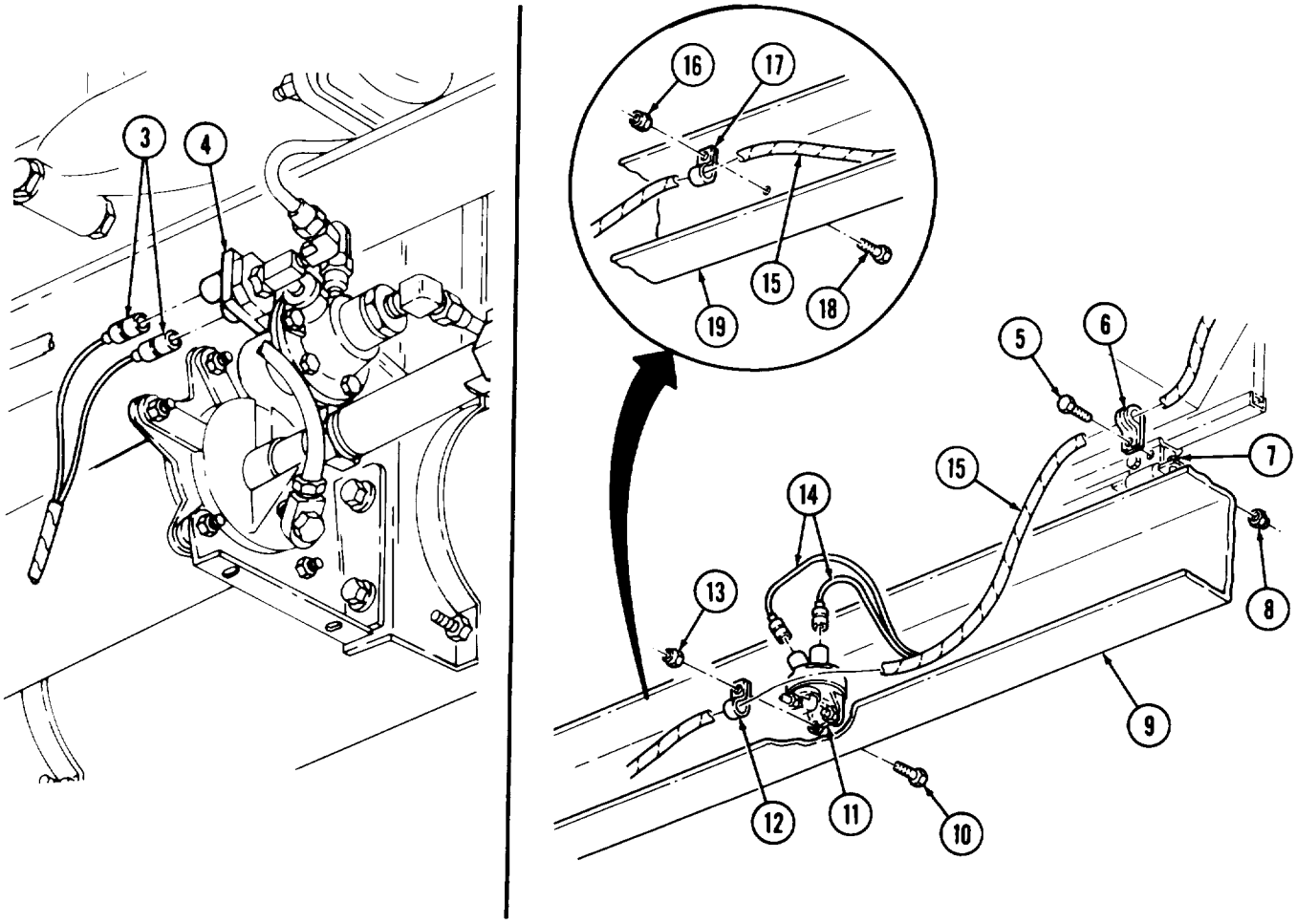

7-4. REAR WIRING HARNESS REPLACEMENT (Contd)

10. Disconnect wire (1) from fuel sending unit (2) on left fuel tank (5).
11. Remove grommet (3) and wire (1) from frame (4).

NOTE

Steps 12 through 14 apply to M816, M817, and M818 vehicles with dual fuel tanks.

12. Disconnect wire (1) from fuel sending unit (2) on right fuel tank (6).
13. Remove grommet (3) and wire (1) from frame (4).
14. Remove wire (1) from two clips (8) on fuel return tube (7).

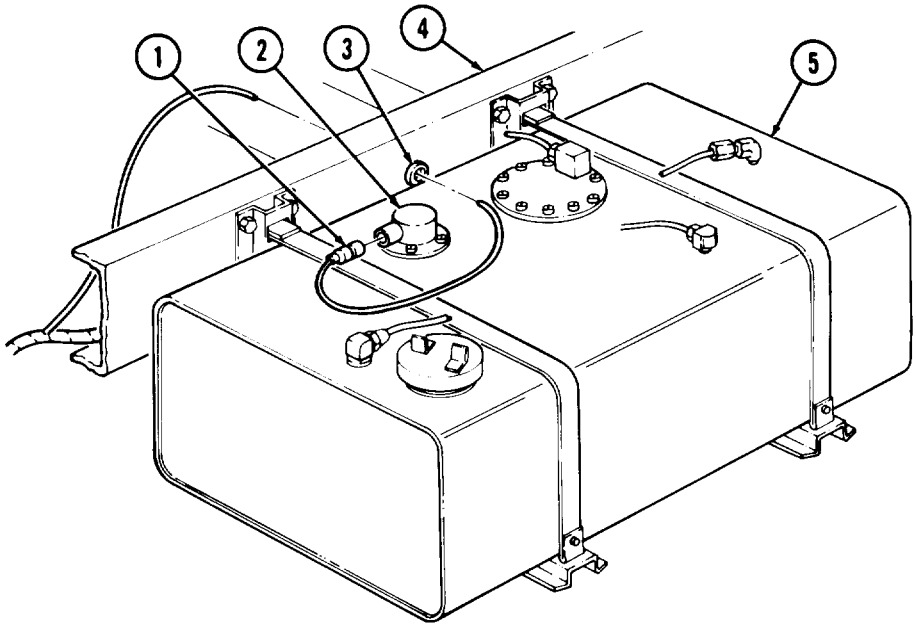

LEFT SIDE

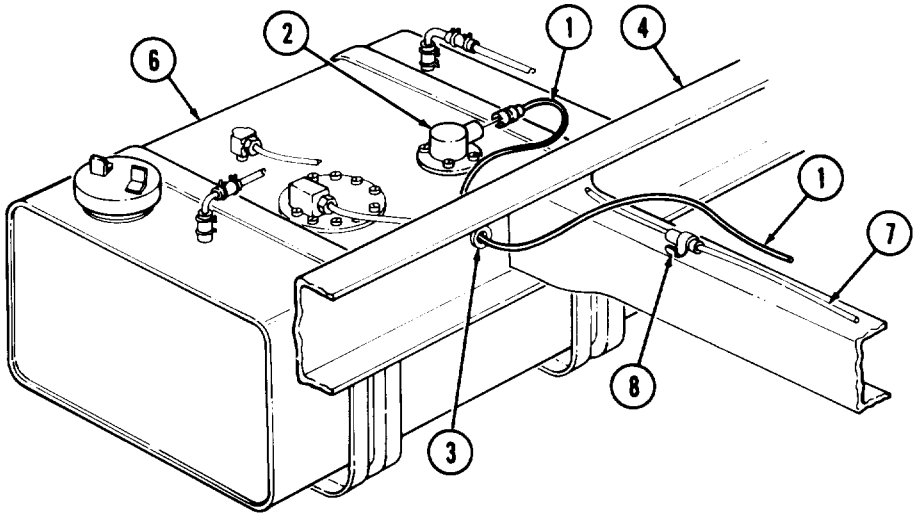

RIGHT SIDE

M816, M817, AND M818 VEHICLES

7-4. REAR WIRING HARNESS REPLACEMENT (Contd)

NOTE

Steps 15 through 18 apply to M818 vehicles.

15. Remove locknut (13), screw (12), two wires (16), and lockwasher (15) from crossmember (14). Discard locknut (13) and lockwasher (15).
16. Remove locknut (18), clamp (17), and screw (9) from spare tire carrier (22). Discard locknut (18).
17. Remove clamp (17) from rear wiring harness (19).

NOTE

Receptacle cover must be lifted and held open to remove top two screws.

18. Remove four locknuts (20), semi-trailer receptacle (21), four screws (10), and cover (11) from spare tire carrier (22). Discard locknuts (20).

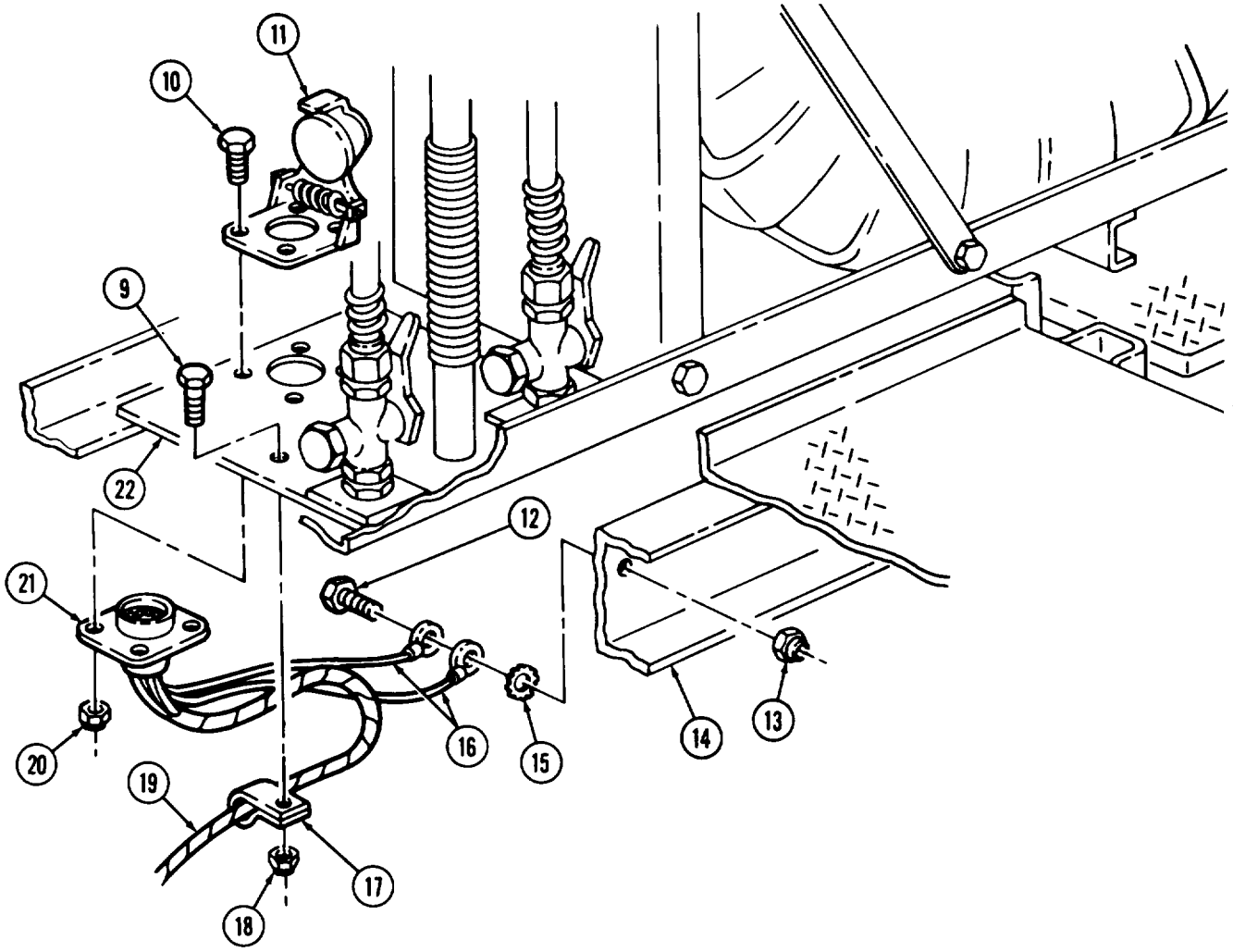

M818 VEHICLES

7-4. REAR WIRING HARNESS REPLACEMENT (Contd)

NOTE

Steps 19 and 20 apply to M818 vehicles.

19. Remove locknut (5), screw (2), lockwasher (3), two wires (4), and clamp (13) from rear crossmember (1). Discard locknut (5) and lockwasher (3).
20. Remove clamp (13) from rear wiring harness (8).
21. Remove locknut (5), screw (2), lockwasher (3), and two wires (4) from rear crossmember (1). Discard lockwasher (3) and locknut (5).

NOTE

Receptacle cover must be lifted and held open to remove top two screws.

22. Remove four locknuts (7), screws (12), cover (11), and trailer receptacle (6) from rear crossmember (1). Discard locknuts (7).

NOTE

Left and right composite lights are disconnected the same. Step 23 covers the left composite light.

23. Disconnect four left composite light wires (9) from four harness leads (10).

7-4. REAR WIRING HARNESS REPLACEMENT (Contd)

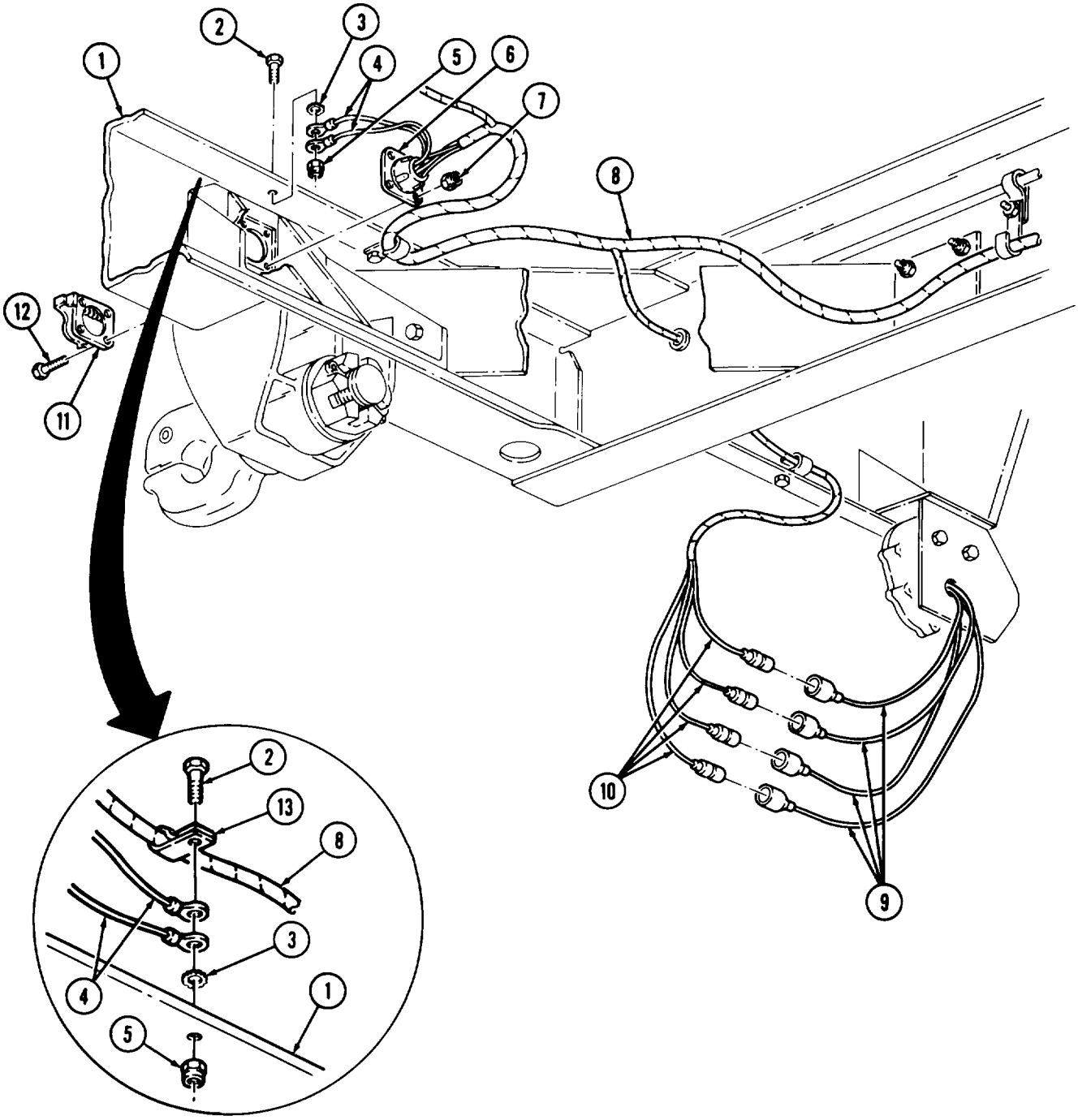

M818 VEHICLES

7-4. REAR WIRING HARNESS REPLACEMENT (Contd)

NOTE

Steps 24 through 35 apply to M819 vehicles.

24. Remove locknut (24), two wires (25), lockwasher (23), and screw (22) from left frame rail (21). Discard locknut (24) and lockwasher (23).
25. Remove locknut (26), clamp (2), and screw (4) from clip extension (3). Discard locknut (26).
26. Remove clamp (2) from rear wiring harness (1).
27. Remove two locknuts (5), screws (8), and clamps (7) and (9) from subframe (6). Discard locknuts (5).
28. Remove clamps (7) and (9) from rear wiring harness (1).
29. Remove two locknuts (11), screws (19), four washers (12), and clamps (10) and (13) from rear left fender (20). Discard locknuts (11).
30. Remove clamps (10) and (13) from rear wiring harness (1).

NOTE

Receptacle cover must be lifted and held open to remove top two screws.

31. Remove four locknuts (18), screws (16), cover (15), and harness receptacle (17) from body (14). Discard locknuts (18).
32. Remove locknut (40), two wires (27), lockwasher (28), and screw (29) from rear crossmember (39). Discard locknut (40) and lockwasher (28).
33. Remove locknut (30), clamp (33), and screw (32) from bracket (31). Discard locknut (30).
34. Remove clamp (33) from rear wiring harness (1).

NOTE

Receptacle cover must be lifted and held open to remove top two screws.

35. Remove four locknuts (38), screws (36), cover (35), and trailer receptacle (37) from bracket (34). Discard locknuts (38).

7-4. REAR WIRING HARNESS REPLACEMENT (Contd)

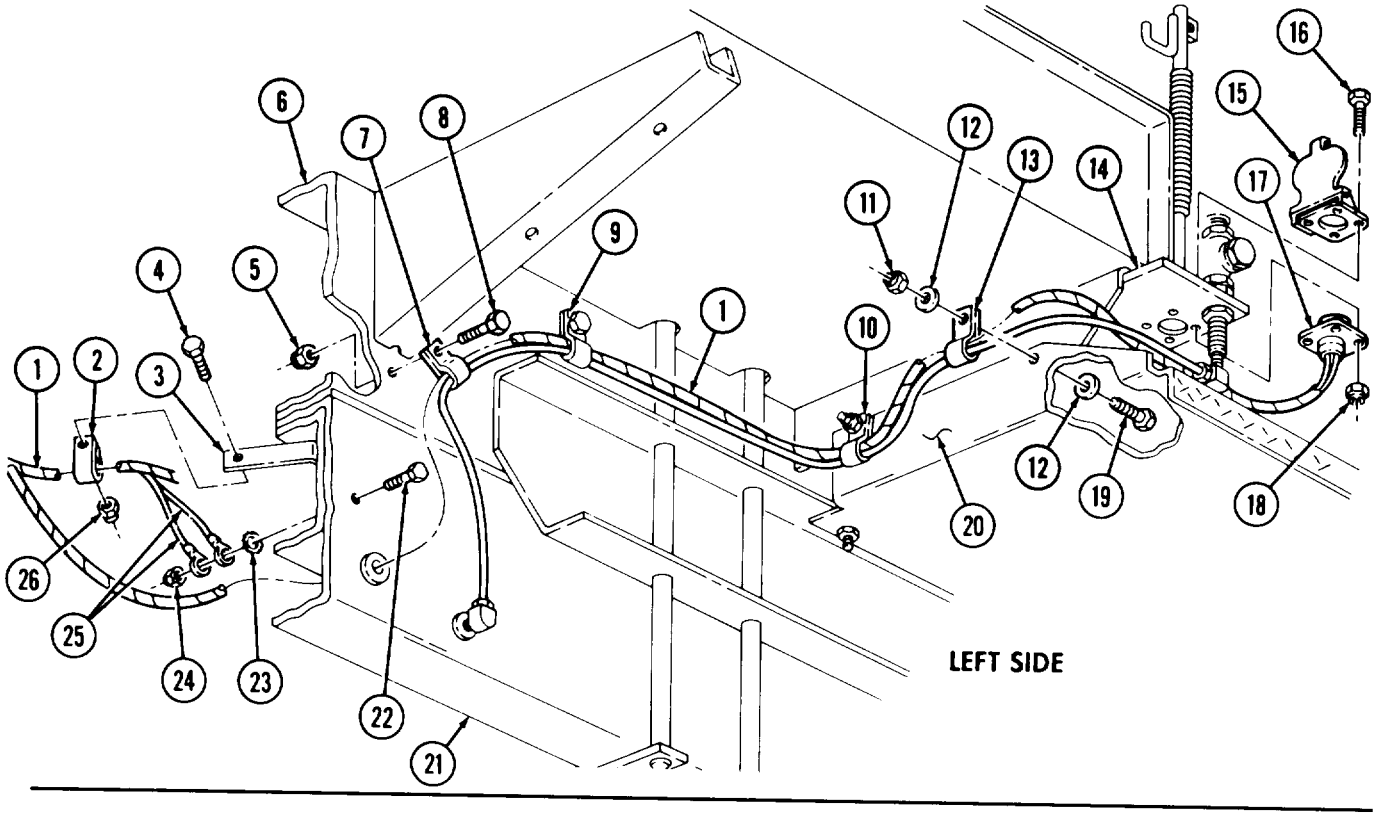

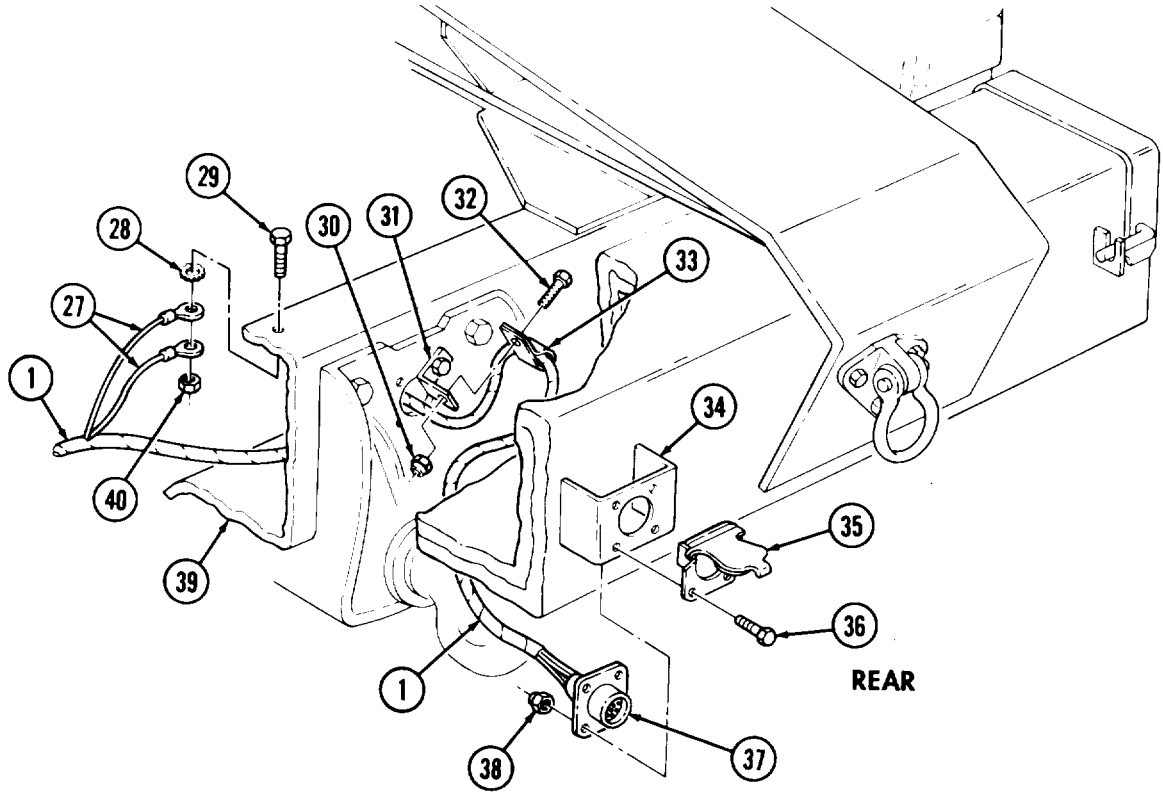

7-4. REAR WIRING HARNESS REPLACEMENT (Contd)

NOTE

Step 36 applies to M820 vehicles.

36. Disconnect connector (5) from clearance light wire (6).

CAUTION

Use care when removing rear wiring harness from vehicle. Pulling and snagging may cause damage to harness.

NOTE

- Tag all clamps for installation.
- Refer to table 7-2, Rear Wiring Harness Clip Quantity, for number of clips used.
- Assistant will help with step 37.

37. Bend clips (8) open and remove rear wiring harness (3) from rear crossmember (7), left side frame rail (4), under cab floor (1), and front receptacle (2).

Table 7-2. Rear Wiring Harness Clip Quantity.

VEHICLE	NUMBER OF CLIPS
M813, M813A1, M815	12
M814	14
M816	15
M817	6
M818	7
M819	10
M820	9

b. Installation

CAUTION

Use care when routing rear wiring harness into vehicle. Pulling and snagging may cause damage to harness.

NOTE

- If new rear wiring harness is to be installed, remove all tags from old harness and install on new harness.
- Assistant will help with step 1.

1. Position rear wiring harness (3) in approximate location on rear crossmember (7), left side frame rail (4), under cab floor (1), and front receptacle (2).

7-4. REAR WIRING HARNESS REPLACEMENT (Contd)

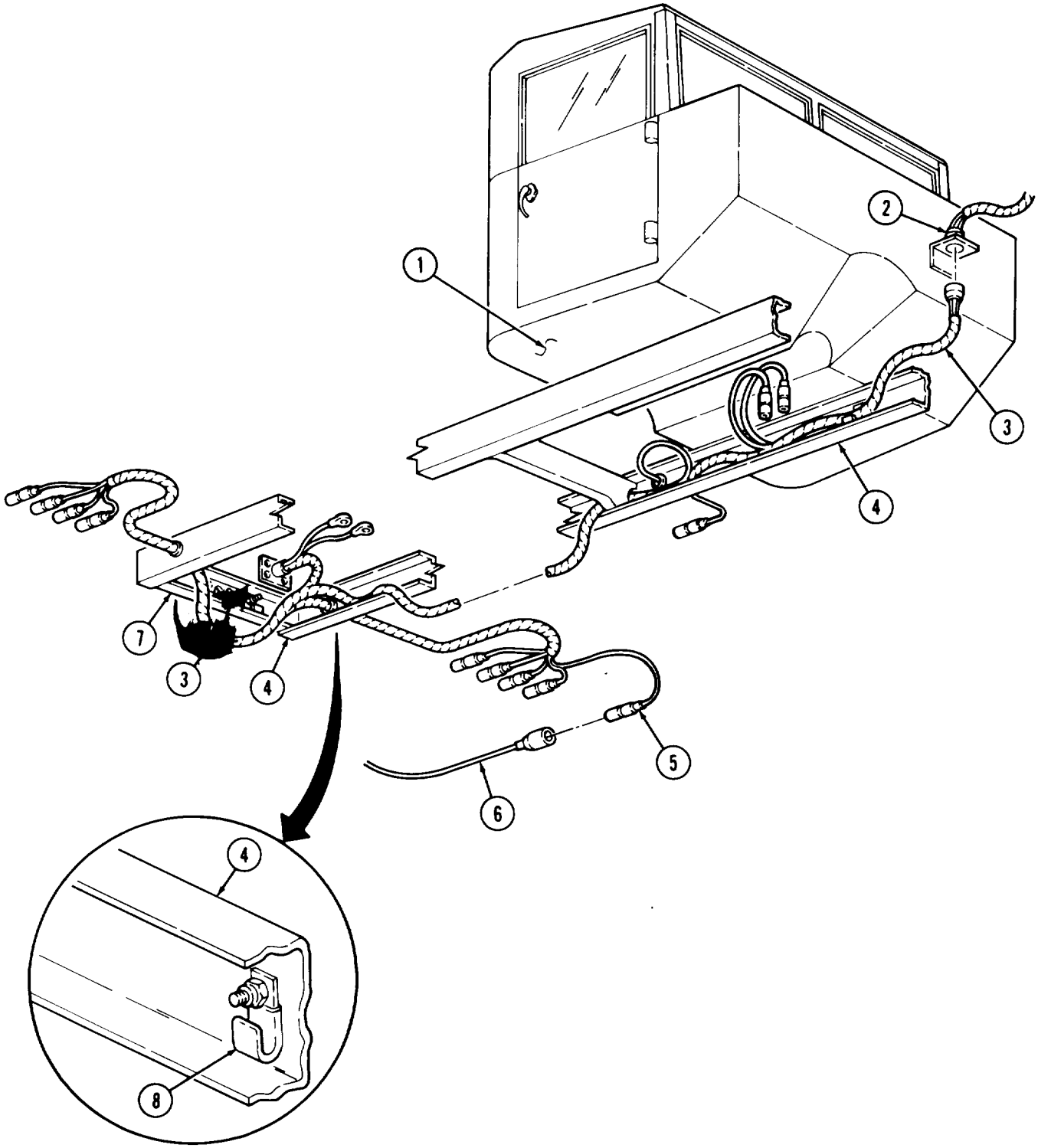

7-4. REAR WIRING HARNESS REPLACEMENT (Contd)

NOTE

Receptacle cover must be lifted and held open to install top two screws.

2. Install trailer receptacle (6) and cover (11) on rear crossmember (1) with four screws (12) and new locknuts (7).
3. Install two wires (4) on rear crossmember (1) with screw (2), new lockwasher (3), and new locknut (5).

NOTE

Left and right rear composite lights are installed the same. Step 4 covers the left composite light installation.

4. Connect four composite light wires (9) to four harness leads (10).

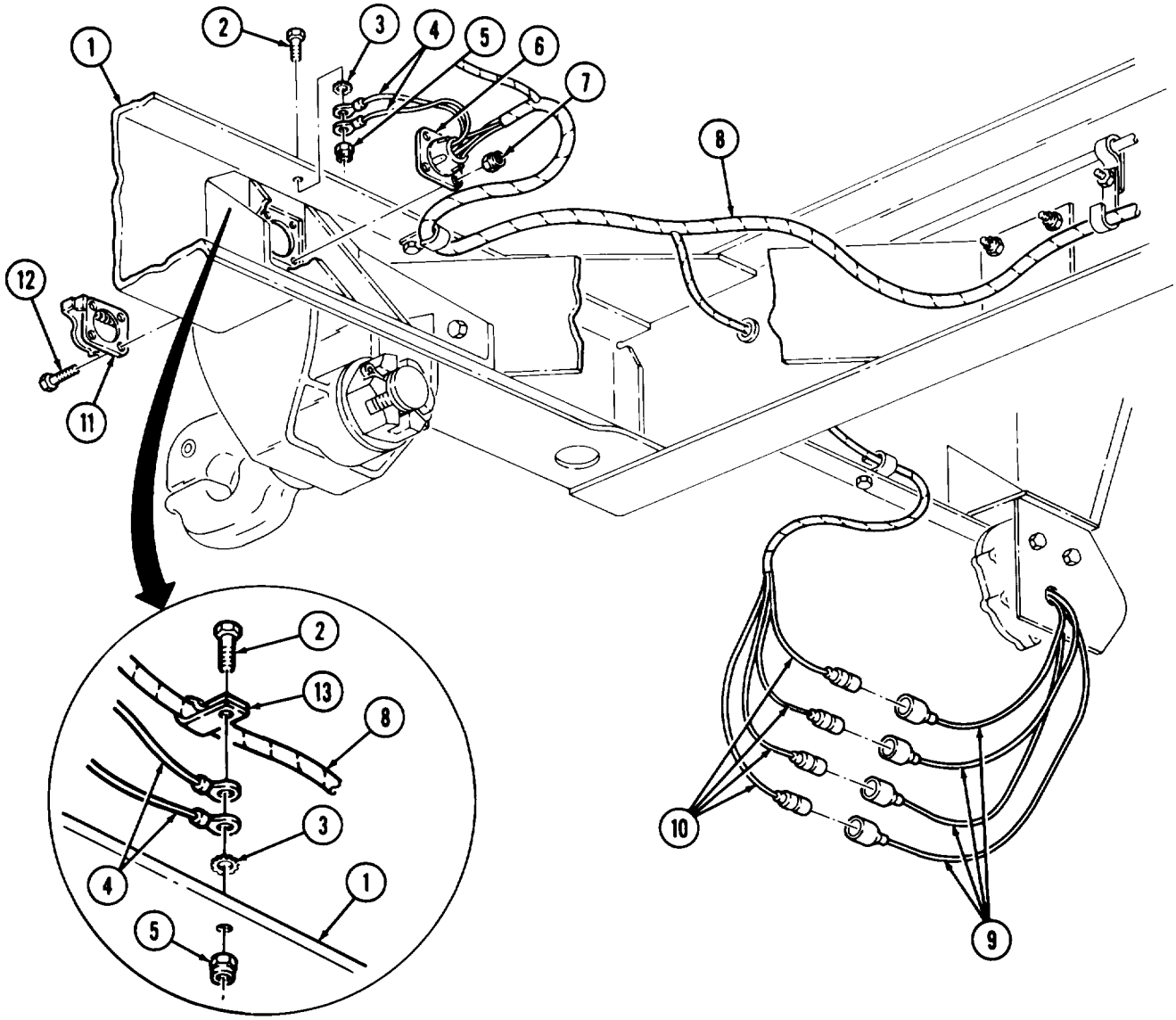

M818 VEHICLES

7-4. REAR WIRING HARNESS REPLACEMENT (Contd)

NOTE

Steps 5 through 8 apply to M818 vehicles.

5. Place clamp (13) over rear wiring harness (8) and install clamp (13) and two wires (4) on rear crossmember (1) with screw (2), new lockwasher (3), and new locknut (5).
6. Install two wires (20) on crossmember (18) with screw (16), new lockwasher (19), and new locknut (17).

NOTE

Receptacle cover must be lifted and held open to install top two screws.

7. Install semi-trailer receptacle (24) and cover (15) on spare tire carrier (25) with four screws (14) and new locknuts (23).
8. Place clamp (22) over rear wiring harness (8) and install on spare tire carrier (25) with screw (26) and new locknut (21).

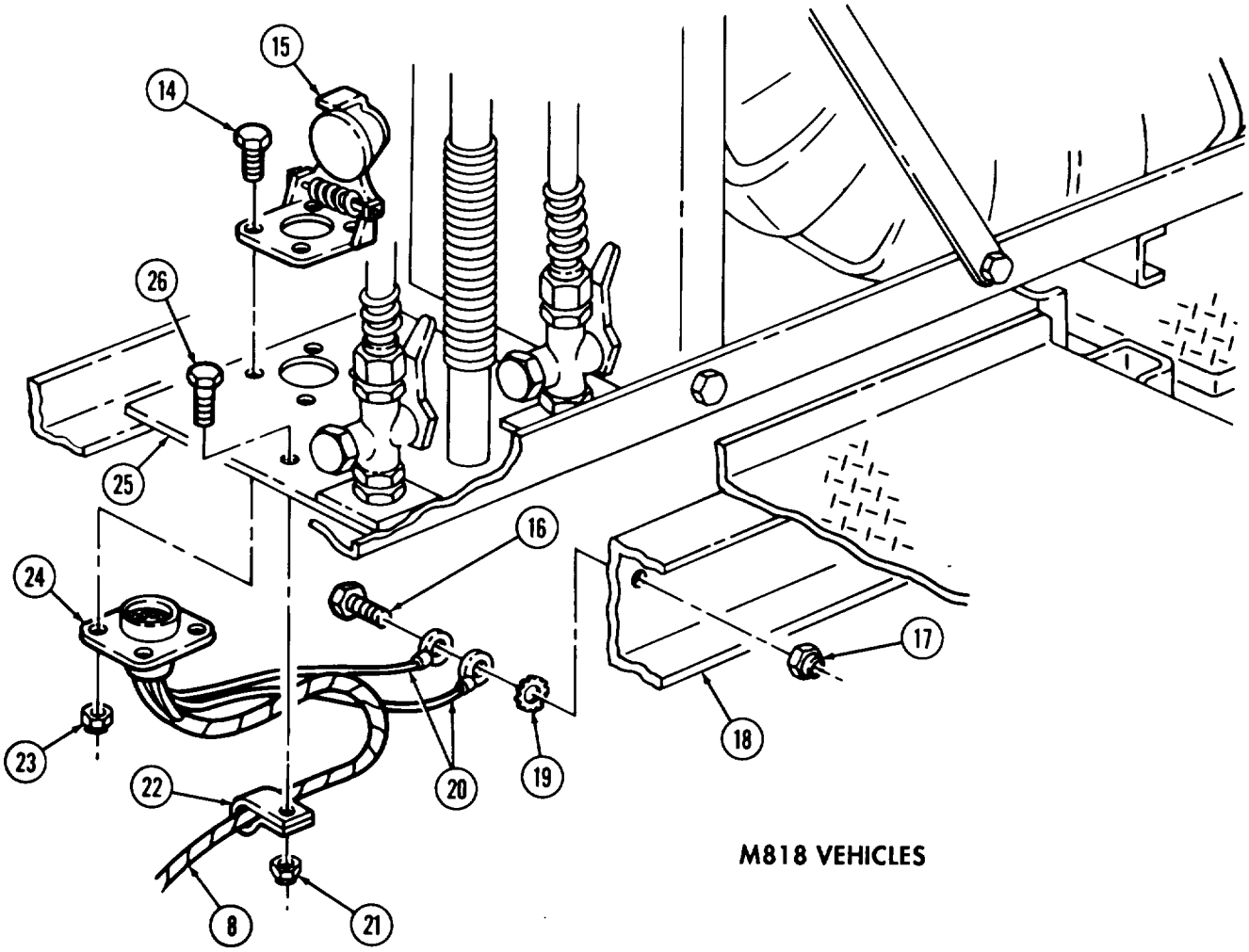

7-4. REAR WIRING HARNESS REPLACEMENT (Contd)

NOTE

- Step 9 through 16 apply to M819 vehicles.
- Receptacle cover must be lifted and held open to install top two screws.

9. Install trailer receptacle (11) and cover (9) on rear bracket (8) with four screws (10) and new locknuts (12).
10. Place clamp (7) over rear wiring harness (13) and install on bracket (5) with screw (6) and new locknut (4).
11. Install two wires (1) on rear crossmember (14) with screw (3), new lockwasher (2), and new locknut (15).

NOTE

Receptacle cover must be lifted and held open to install top two screws.

12. Install harness receptacle (31) and cover (29) on body (28) with four screws (30) and new locknuts (32).
13. Place clamps (24) and (27) over rear wiring harness (13) and install on rear left fender (34) with two screws (33), four washers (26), and two new locknuts (25).
14. Place clamps (21) and (23) over rear wiring harness (13) and install on subframe (20) with two screws (22) and new locknuts (19).
15. Place clamp (16) over rear wiring harness (13) and install on clip extension (17) with screw (18) and new locknut (40).
16. Install two wires (39) on left frame rail (35) with screw (36), new lockwasher (37), and new locknut (38).

7-4. REAR WIRING HARNESS REPLACEMENT (Contd)

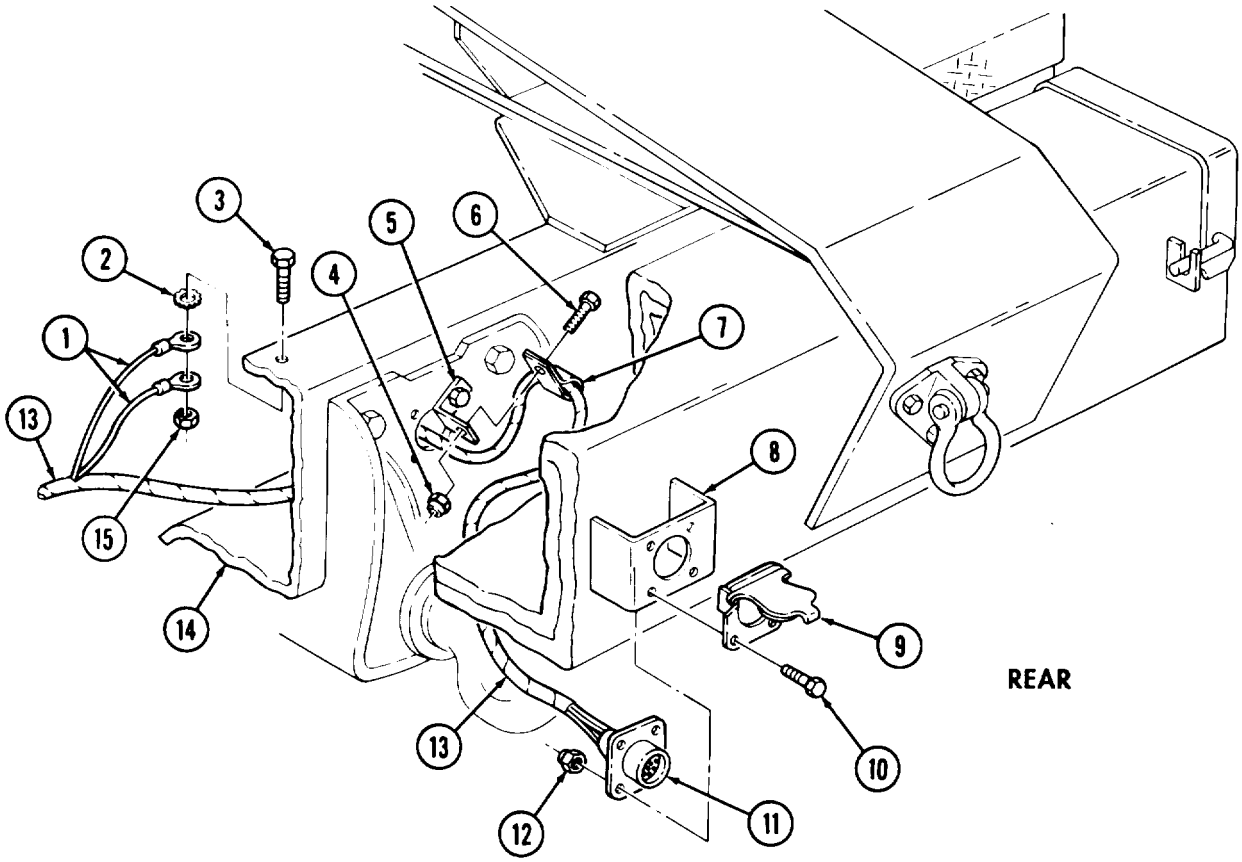

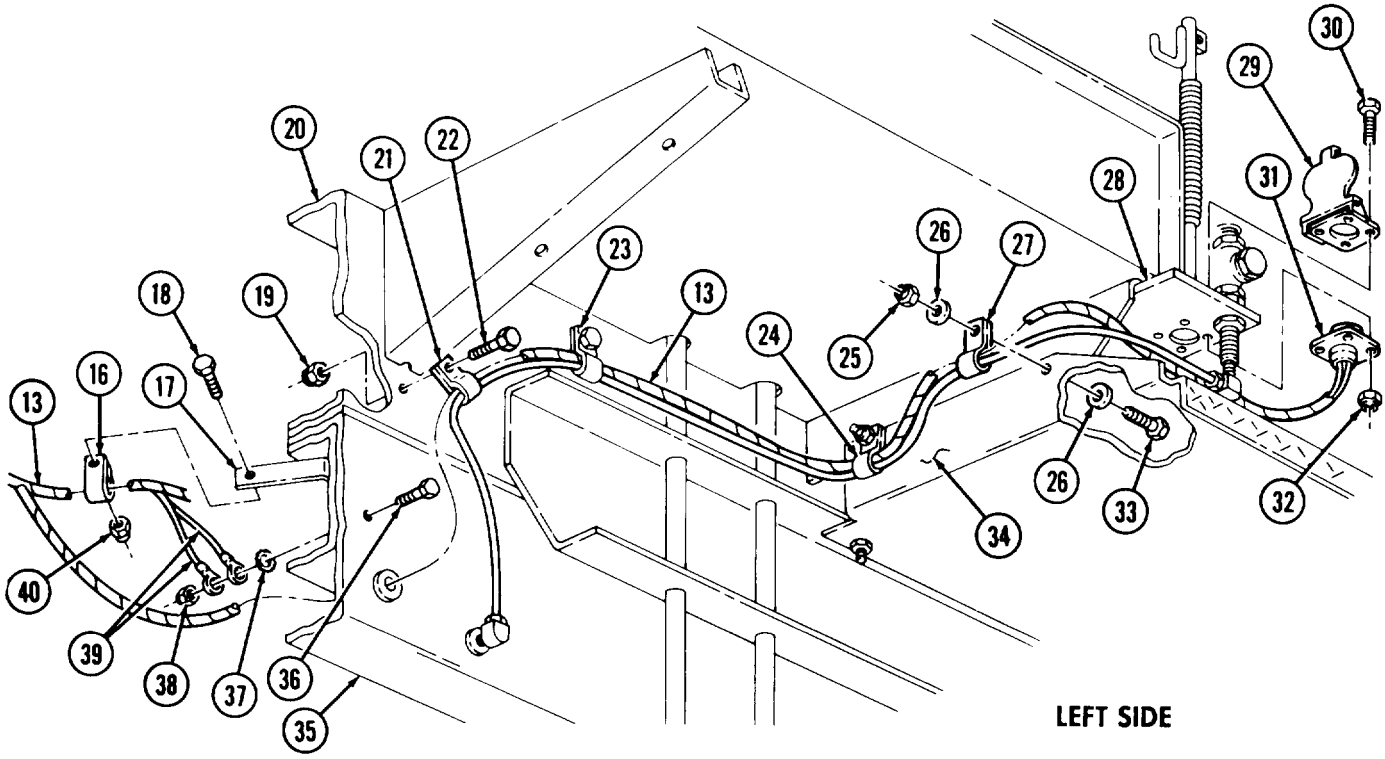

7-4. REAR WIRING HARNESS REPLACEMENT (Contd)

17. Insert wire (1) through left frame rail (4).
18. Connect wire (1) to fuel sending unit (2) on left fuel tank (5).
19. Install grommet (3) on wire (1) and left frame rail (4).

NOTE

Steps 20 through 25 apply to M816, M817, and M818 vehicles with dual fuel tanks.

20. Insert wire (1) through right frame rail (4).
21. Connect wire (1) to fuel sending unit (2) on right fuel tank (5).
22. Install grommet (3) on wire (1) and right frame rail (4).
23. Install wire (1) on two fuel return tube clips (6).

NOTE

Steps 24 and 25 apply to vehicles with stoplight switch mounted on air pack.

24. Connect two wires (11) to stoplight switch (12).
25. Place clamp (8) over rear wiring harness (10) and install on left frame rail (4) with screw (9) and new locknut (7).

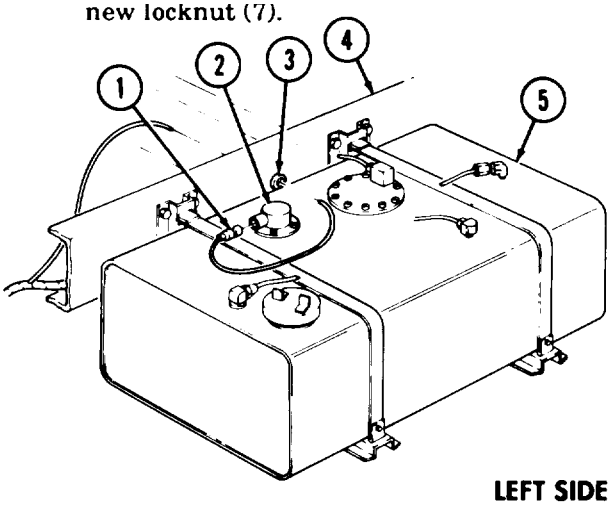

LEFT SIDE

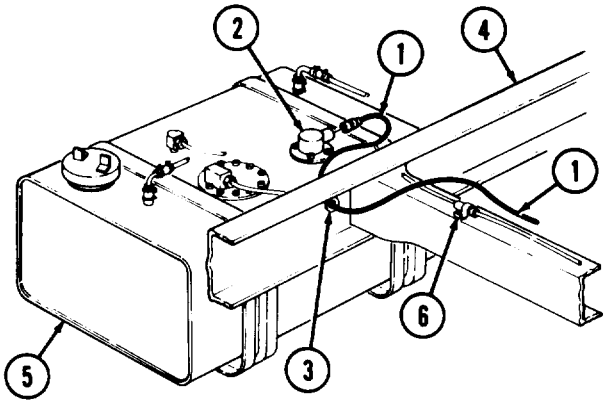

RIGHT SIDE

M816, M817, M818 VEHICLES

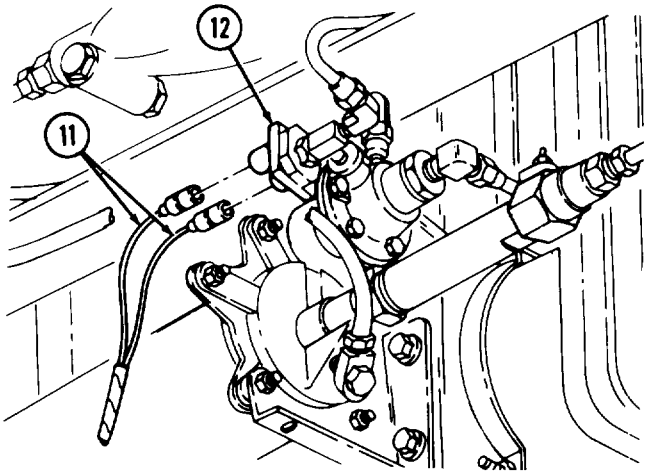

M816, M817, M818 VEHICLES

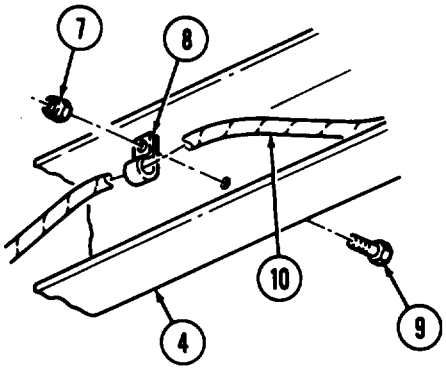

7-4. REAR WIRING HARNESS REPLACEMENT (Contd)

NOTE

Steps 26 and 27 apply to vehicles with stoplight switch mounted on left frame rail.

26. Place clamp (8) over rear wiring harness (10) and install on stoplight switch (18) and left frame rail (4) with screw (9) and new locknut (7).
27. Connect two wires (13) to stoplight switch (18).
28. Place clamp (15) over rear wiring harness (10) and install on cab support (16) with screw (14) and new locknut (17).
29. Connect rear wiring harness receptacle (20) to front wiring harness receptacle (19).

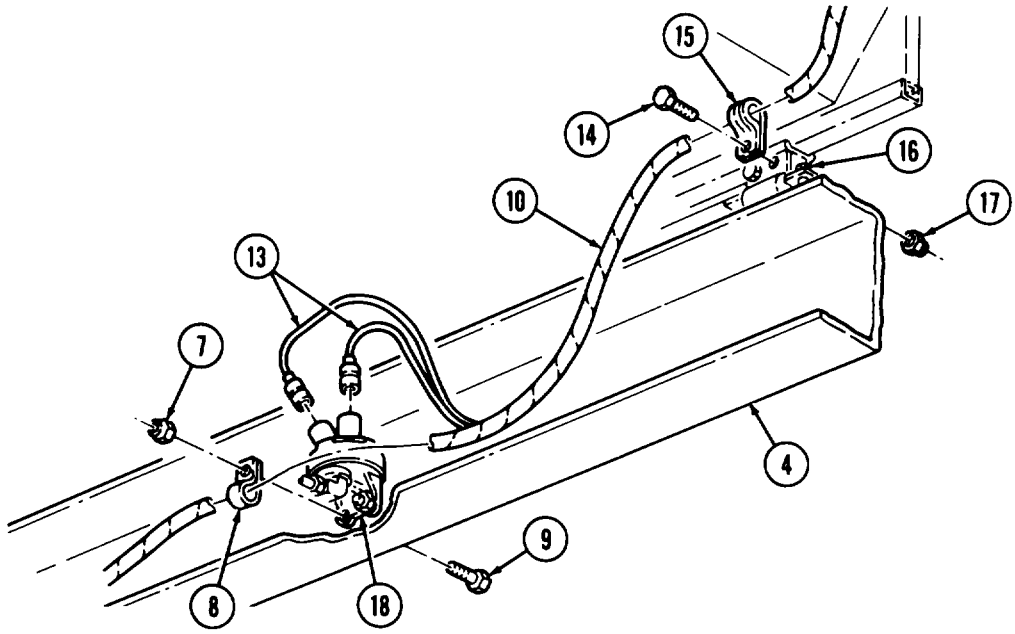

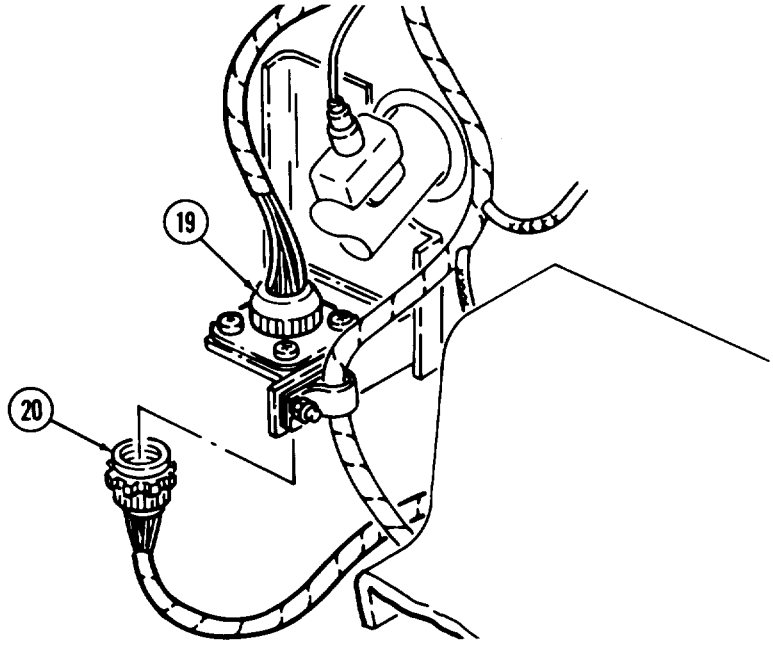

7-4. REAR WIRING HARNESS REPLACEMENT (Contd)

NOTE

Step 30 applies to M820 vehicles.

30. Connect connector (3) to clearance light wire (4).

NOTE

Refer to table 7-3, Rear Wiring Harness Clip Quantity, for number of harness clips installed on each vehicle.

31. Place rear wiring harness (1) on clips (6) on left frame rail (2) and rear crossmember (5). Bend clips (6) close against rear wiring harness (1).

Table 7-3. Rear Wiring Harness Clip Quantity.

VEHICLE	NUMBER OF CLIPS
M813, M813A1, M815	12
M814	14
M816	15
M817	6
M818	7
M819	10
M820	9

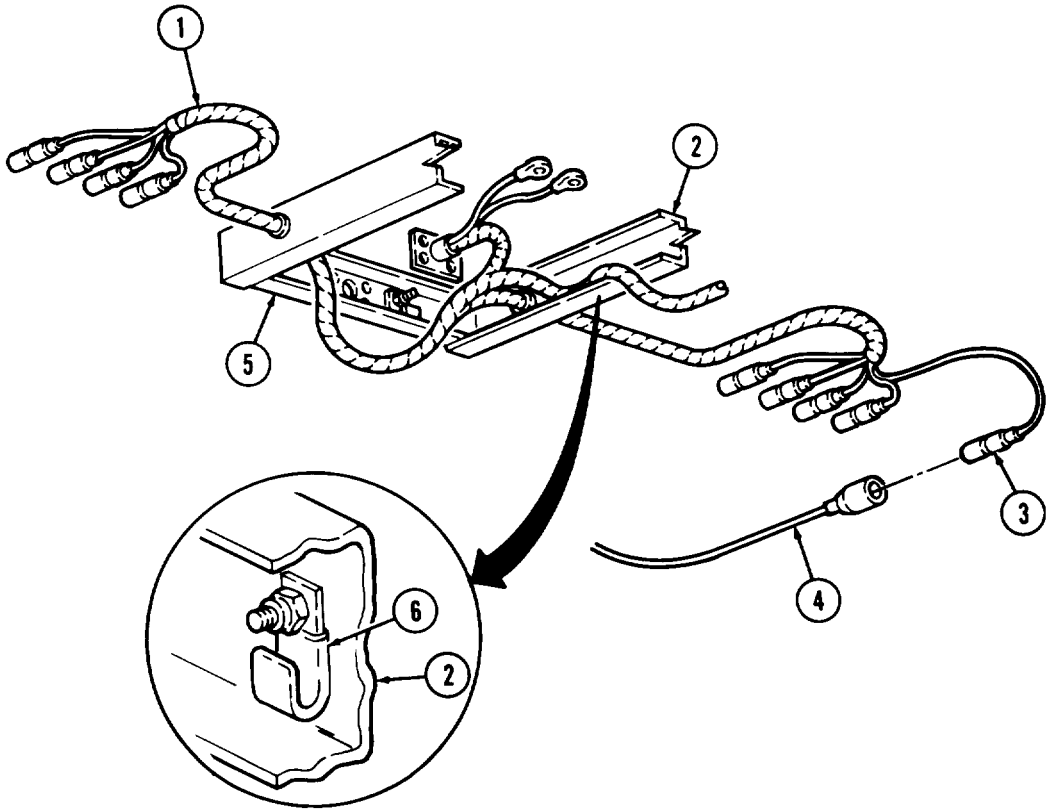

FOLLOW-ON TASK: Connect battery ground cables (TM 9-2320-260-20).

CHAPTER 8

TRANSMISSION MAINTENANCE

8-1. TRANSMISSION MAINTENANCE INDEX

PARA. NO.	TITLE	PAGE NO.
8-2.	Twin Poppet Valve Replacement	8-2
8-3.	Transmission Gearshift Lever Maintenance	8-4
8-4.	Transmission (In-Vehicle) Replacement	8-6
8-5.	Transmission (Out-of-Vehicle) Replacement	8-10
8-6.	Transmission Maintenance	8-14
8-7.	Transmission Shifter Housing Maintenance	8-38

8-2. TWIN POPPET VALVE REPLACEMENT

THIS TASK COVERS:

a. Removal **b. Installation**

INITIAL SETUP

APPLICABLE MODELS
All

TOOLS
General mechanic's tool kit
(Appendix B, Item 1)

MATERIALS/PARTS
Two O-rings (Appendix D, Item 296)
Four lockwashers (Appendix D, Item 235)
Two gaskets (Appendix D, Item 129)
Antiseize tape (Appendix C, Item 50)

REFERENCES (TM)
TM 9-2320-260-20
TM 9-2320-260-34 P-1

EQUIPMENT CONDITION
Cab tunnel removed (TM 9-2320-260-20).

GENERAL SAFETY INSTRUCTIONS
Do not disconnect air lines before draining air reservoirs.

a. Removal

WARNING

Do not disconnect air lines before draining air reservoirs. Small parts under pressure may shoot out with high velocity, causing injury to personnel.

1. Remove three air lines (1) from elbows (2).
2. Remove three elbows (2) from twin poppet valve (3).
3. Remove four screws (5), lockwashers (4), twin poppet valve (3), two gaskets (6), and O-rings (7) from transmission (8). Discard lockwashers (4), O-rings (7), and gaskets (6).

b. Installation

NOTE

Wrap male pipe threads with antiseize tape before installation.

1. Install three elbows (2) on twin poppet valve (3).
2. Install two new O-rings (7), new gaskets (6), and twin poppet valve (3) on transmission (8) with four new lockwashers (4) and screws (5).
3. Install three air lines (1) on elbows (2).

8-2. TWIN POPPET VALVE REPLACEMENT (Contd)

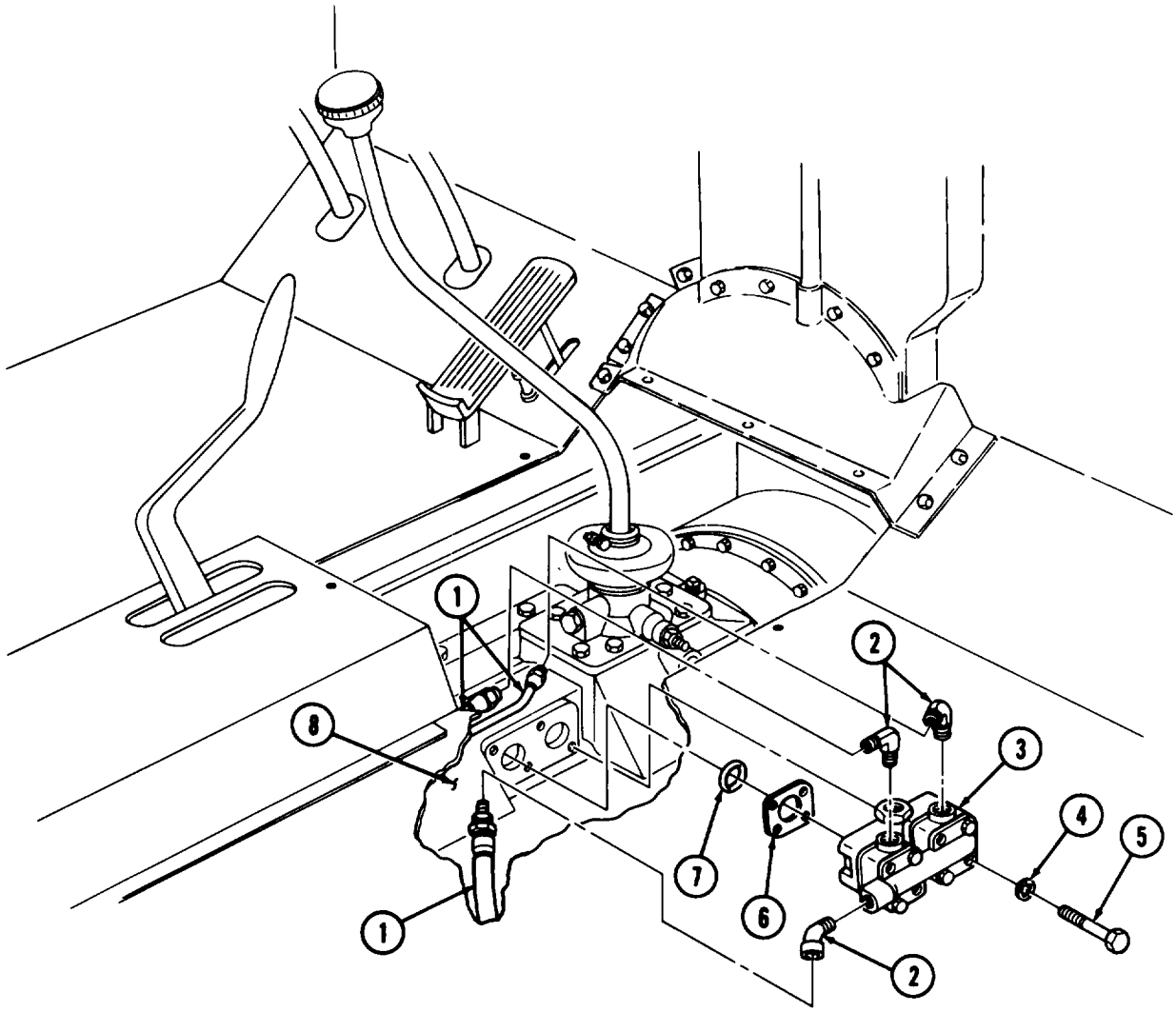

FOLLOW-ON TASK Install cab tunnel (TM 9-2320-260-20).

8-3. TRANSMISSION GEARSHIFT LEVER MAINTENANCE

THIS TASK COVERS:

a. Removal
b. Disassembly
c. Inspection
d. Assembly
e. Installation

INITIAL SETUP

APPLICABLE MODELS
All

TOOLS
General mechanic's tool kit
(Appendix B, Item 1)

MATERIALS/PARTS
Lockwasher (Appendix D, Item 237)
Snapring (Appendix D, Item 512)

REFERENCES (TM)
TM 9-2320-260-20
TM 9-2320-260-34P-1

EQUIPMENT CONDITION
- Shift lever knob and boot removed (TM 9-2320-260-20).
- Cab tunnel removed (TM 9-2320-260-20).

a. Removal

Remove screw (9), lockwasher (8), gearshift lever (1), and retainer (5) from gearshift lever housing (7). Discard lockwasher (8).

b. Disassembly

1. Remove snapring (3), spring (4), and cup (2) from gearshift lever (1). Discard snapring (3).
2. Remove pin (6) and gearshift lever (1) from retainer (5).

c. Inspection

1. Inspect gearshift lever (1) for twist, bends, cracks, and breaks. Replace gearshift lever(1) if damaged.
2. Inspect retainer (5) for cracks, breaks, and wear. Replace retainer (5) if damaged.

d. Assembly

1. Install gearshift lever (1) in retainer (5) with pin (6).
2. Install cup (2) and spring (4) on gearshift lever (1) with new snapring (3).

e. Installation

Install gearshift lever (1) and retainer (5) in gearshift lever housing (7) with new lockwasher (8) and screw (9).

8-3. TRANSMISSION GEARSHIFT LEVER MAINTENANCE (Contd)

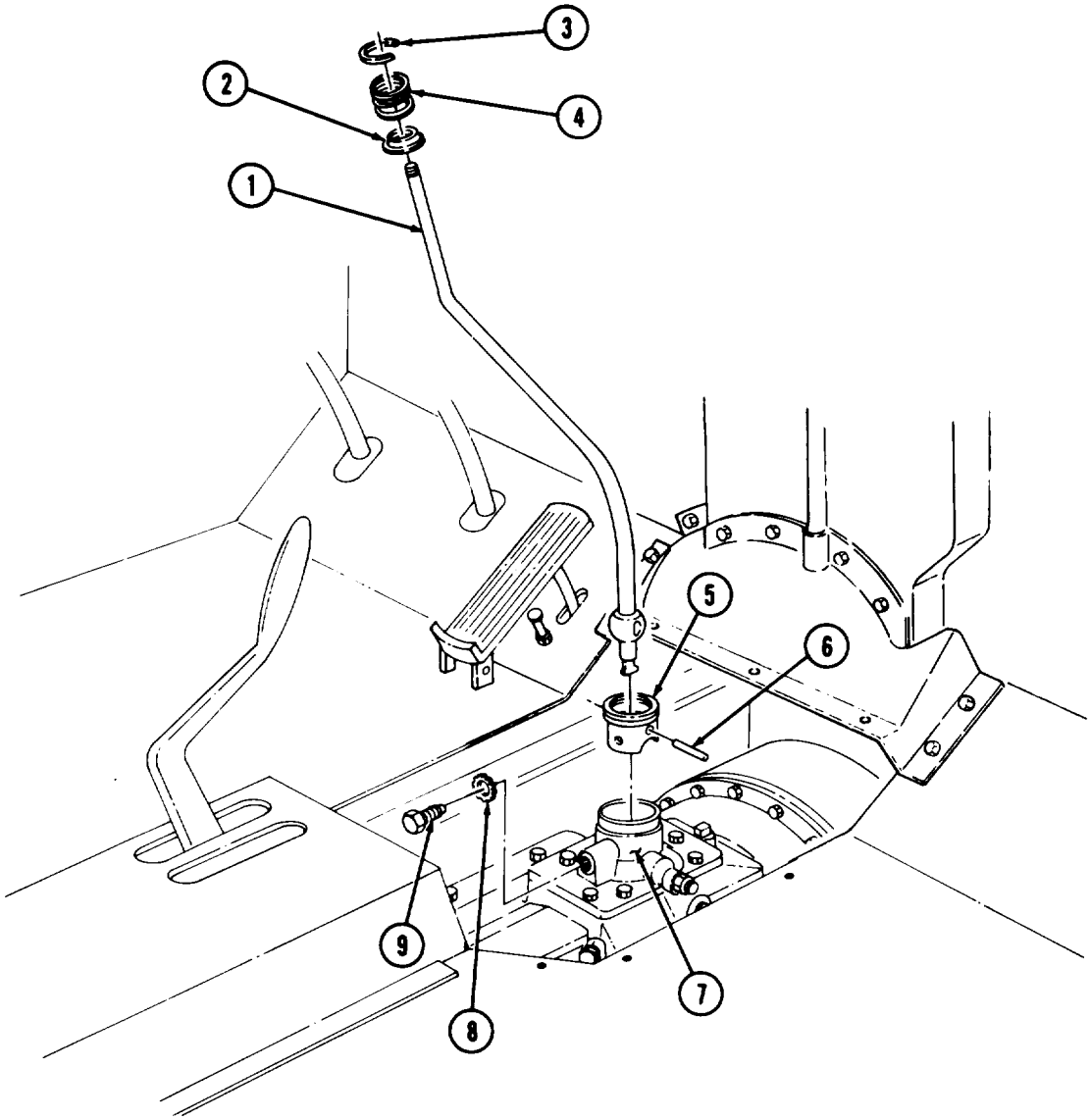

FOLLOW-ON TASKS: • Install shift lever boot and knob (TM 9-2320-260-20).
• Install cab tunnel (TM 9-2320-260-20).

8-4. TRANSMISSION (IN-VEHICLE) REPLACEMENT

THIS TASK COVERS:

a. Removal **b. Installation**

INITIAL SETUP

APPLICABLE MODELS
All

TOOLS
General mechanic's tool kit (Appendix B. Item 1)
Transmission lifting jack
Torque wrench, 3/8-in. dr. (Appendix B, Item 4)
Lifting device
Chain

MATERIALS/PARTS
Twelve lockwashers (Appendix D, Item 215)
Thirteen lockwashers (vehicles with front winch) (Appendix D, Item 215)
Two screw-assembled lockwashers (Appendix D, Item 385)
Locknut (vehicles with front winch) (Appendix D, Item 170)
Gasket (Appendix D, Item 139)
Two screws (Appendix C, Item 36)
Two washers (Appendix C, Item 58)

REFERENCES (TM)
TM 9-2320-260-10
TM 9-2320-260-20
TM 9-2320-260-34 P-1

EQUIPMENT CONDITION
- Wheels chocked (TM 9-2320-260-10).
- Cab tunnel, rear tunnel, and toeboard removed (TM 9-2320-260-20).
- Transmission-to-transfer case propeller shaft removed (TM 9-2320-260-20).
- Front winch propeller shaft removed (TM 9-2320-260-20).
- Gearshift lever removed (para. 8-3).
- Rotochamber removed (M816) (para. 4-4).
- Twin poppet valve removed (para. 8-2).

GENERAL SAFETY INSTRUCTIONS
- All personnel must stand clear during lifting operations.
- Lifting capacity must be greater than weight of transmission.

a. Removal

1. Remove clevis pin (6) and turnbuckle (5) from clutch release lever (7).
2. Remove screw (4), lockwasher (3), bracket (1), and spring (2) from bell housing (8). Discard lockwasher (3).
3. Place transmission lifting jack under transmission (22).
4. Remove two screw-assembled lockwashers (15) from transmission shifter housing (12). Discard screw-assembled lockwashers (15).
5. Install chain on transmission shifter housing (12) with two washers (14) and screws (13).

WARNING

- Lifting device and transmission lifting jack must have a weight capacity greater than the weight of the transmission to prevent damage to equipment and injury to personnel.
- All personnel must stand clear during lifting operations. A swinging or shifting load may cause injury to personnel.

6. Attach lifting device to chain.

NOTE

Perform steps 7 and 8 for vehicles equipped with front winch.

7. Remove screw (18) and lock washer (19) from shift arm (16) and power takeoff (21). Discard lockwasher (19).
8. Remove locknut (17), screw (20), and shift arm (16) from power takeoff (2 1). Discard locknut (17).

8-4. TRANSMISSION (IN-VEHICLE) REPLACEMENT (Contd)

9. Remove eleven screws (11) and lockwashers (10) from bell housing (8) and flywheel housing (9). Discard lockwashers (10).
10. Remove transmission (22) and gasket (23) from flywheel housing (9). Discard gasket (23).
11. Lower transmission (22) onto transmission lifting jack.
12. Position safety strap around transmission (22).
13. Remove lifting device from chain.
14. Remove two screws (13), washers (14), and chain from transmission shifter housing (12).

NOTE

Perform step 15 if installing a new transmission.

15. Install two new screw-assembled lockwashers (15) in transmission shifter housing (12).

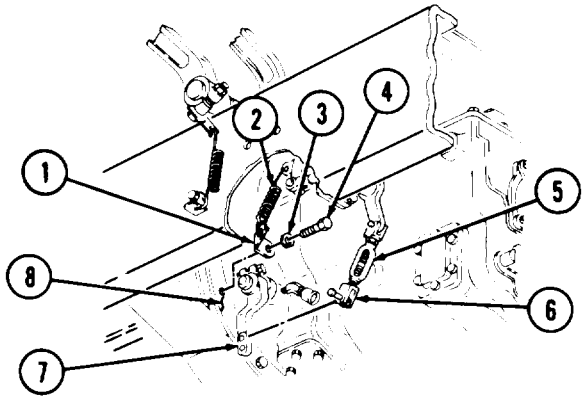

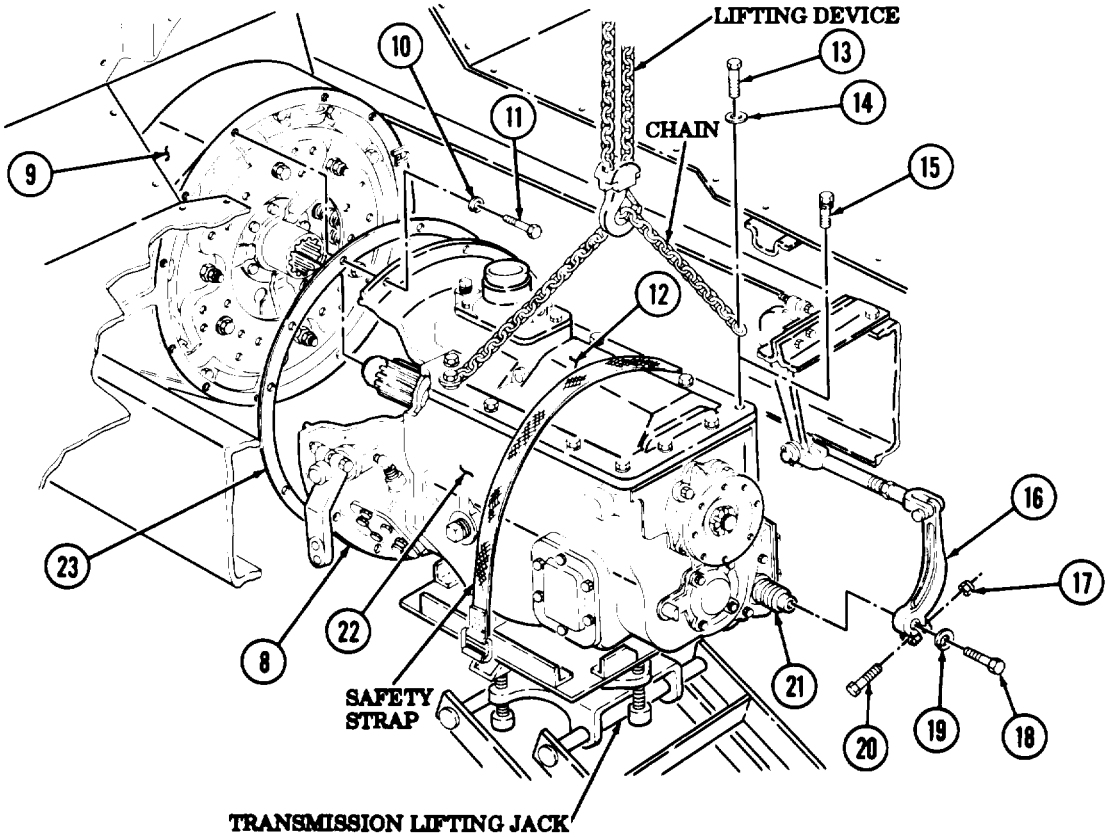

8-4. TRANSMISSION (IN-VEHICLE) REPLACEMENT (Contd)

b. Installation

NOTE

Perform step 1 if installing a new transmission.

1. Remove two screw-assembled lockwashers (7) from transmission shifter housing (4). Discard screw-assembled lockwashers (7).
2. Install chain on transmission shifter housing (4) with two washers (6) and screws (5).
3. Attach lifting device to chain.
4. Remove safety strap from transmission (14).

WARNING

- Lifting device and transmission lifting jack must have a weight capacity greater than the weight of the transmission to prevent damage to equipment and injury to personnel.
- All personnel must stand clear during lifting operations. A swinging or shifting load may cause injury to personnel.

5. Raise transmission (14) and place on transmission lifting jack.
6. Raise transmission (14) on transmission lifting jack and position input shaft (15) in clutch disc hub (17). Ensure splines of input shaft (15) aline with clutch disc hub (17).
7. Install new gasket (16) and transmission (14) on flywheel housing (1) with eleven new lock-washers (2) and screws (3). Tighten screws (3) 25-31 lb-ft (34-42 N•m).

NOTE

Perform steps 8 and 9 for vehicles equipped with front winch.

8. Install shift arm (8) on power takeoff (13) with screw (12) and new locknut (9).
9. Install new lockwasher (11) and screw (10) on power takeoff (13) and shift arm (8).
10. Remove lifting device from chain.
11. Remove two screws (5), washers (6), and chain from transmission shifter housing (4).
12. Install two new screw-assembled lockwashers (7) in transmission shifter housing (4).
13. Remove transmission lifting jack from under transmission (14).
14. Install bracket (18) and spring (19) on bell housing (24) with new lockwasher (20) and screw (21). Tighten screw (21) 25-31 lb-ft (34-42 N•m).
15. Install turnbuckle (22) on clutch release lever (25) with clevis pin (23).

8-4. TRANSMISSION (IN-VEHICLE) REPLACEMENT (Contd)

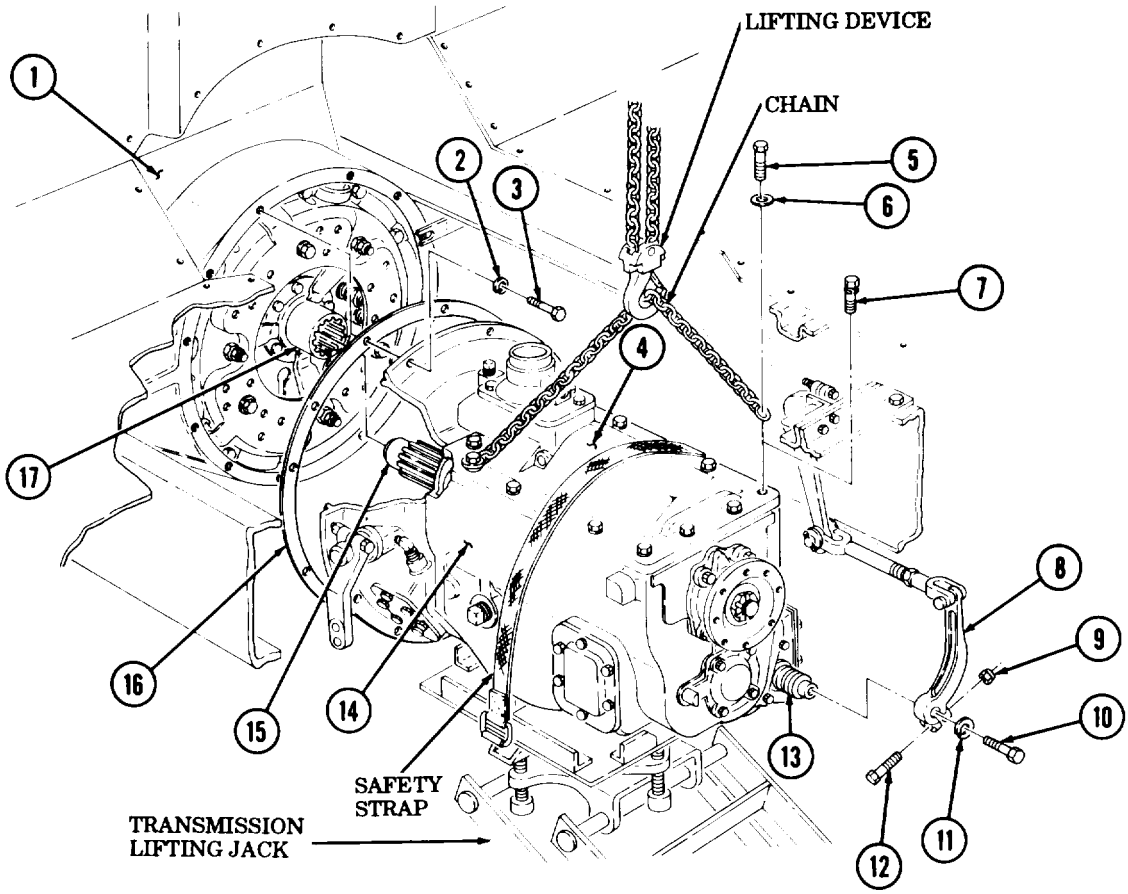

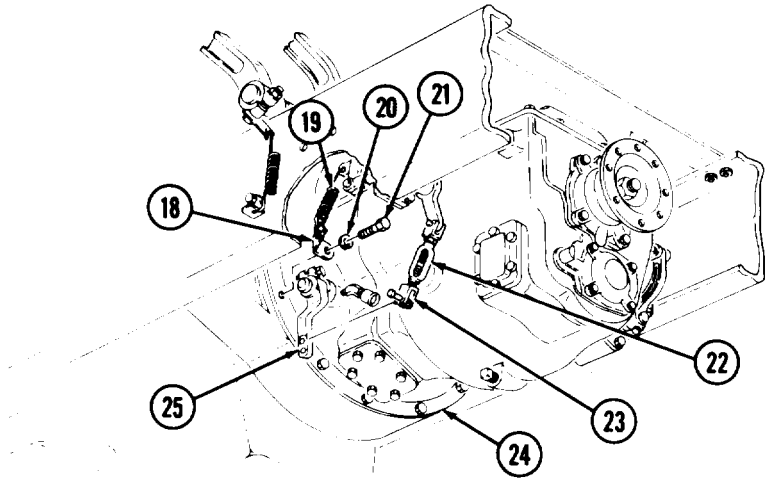

FOLLOW-ON TASKS:
- Install twin poppet valve (para. 8-2).
- Install rotochamber (M816) (para. 4-4).
- Install gearshift lever (para. 8-3).
- Install front winch propeller shaft (TM 9-2320-260-20).
- Install transmission-to-transfer case propeller shaft (TM 9-2320-260-20).
- Install cab tunnel, rear tunnel, and toeboard (TM 9-2320-260-20).

8-5. TRANSMISSION (OUT-OF-VEHICLE) REPLACEMENT

THIS TASK COVERS:

a. Removal **b. Installation**

INITIAL SETUP

APPLICABLE MODELS
All

TOOLS
General mechanic's tool kit (Appendix B, Item 1)
Torque wrench, 3/8-in. dr. (Appendix B, Item 4)
Transmission lifting jack

MATERIALS/PARTS
Twelve lockwashers (Appendix D, Item 215)
Gasket (Appendix D, Item 139)
Gasket (vehicles with transmission PTO) (Appendix D, Item 134)

MATERIALS/PARTS (Contd)
Six lockwashers (vehicles with transmission PTO) (Appendix D, Item 215)
Gasket sealant (Appendix C, Item 42)

REFERENCES (TM)
TM 9-2320-260-34P-1

EQUIPMENT CONDITION
Engine and transmission removed (para. 3-24).

GENERAL SAFETY INSTRUCTIONS
Lifting capacity of transmission lifting jack must be greater than weight of transmission.

a. Removal

WARNING

Transmission lifting jack must have a lifting capacity greater than the weight of the transmission to prevent damage to equipment and injury to personnel.

1. Position transmission lifting jack under transmission (5).
2. Remove twelve screws (4) and lockwashers (3) from bell housing (2) and flywheel housing (6). Discard lockwashers (3).
3. Remove transmission (5) and gasket (1) from flywheel housing (6). Discard gasket (1).
4. Position safety strap around transmission (5).

NOTE

Steps 5 and 6 apply to transmissions equipped with transmission power takeoff.

5. Remove six nuts (9), lockwashers (8), power takeoff (10), and gasket (11) from transmission (5). Discard lockwashers (8) and gasket (11).

NOTE

Perform step 6 if stud(s) is damaged.

6. Remove stud(s) (7) from transmission (5).

8-5. TRANSMISSION (OUT-OF-VEHICLE) REPLACEMENT (Contd)

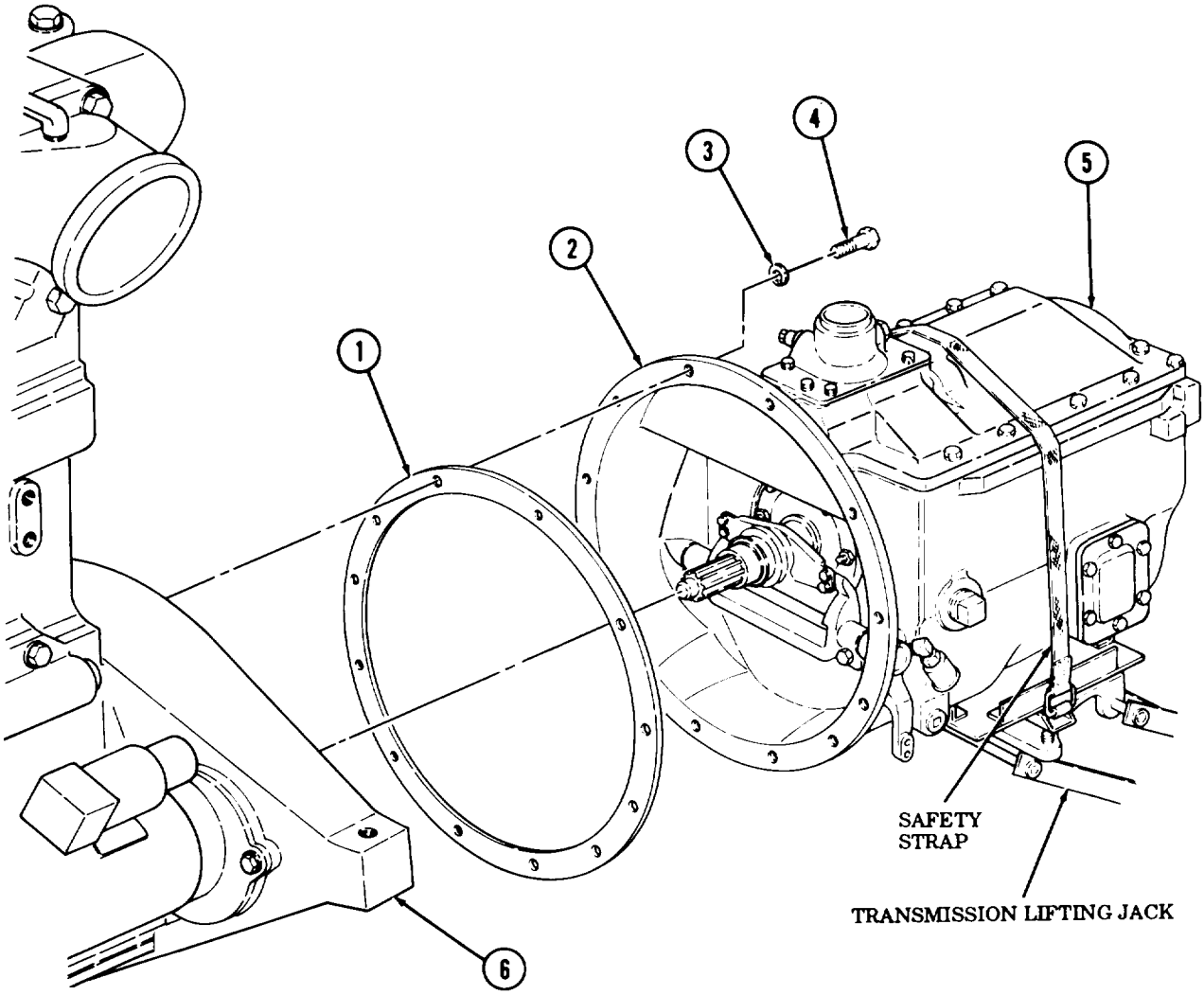

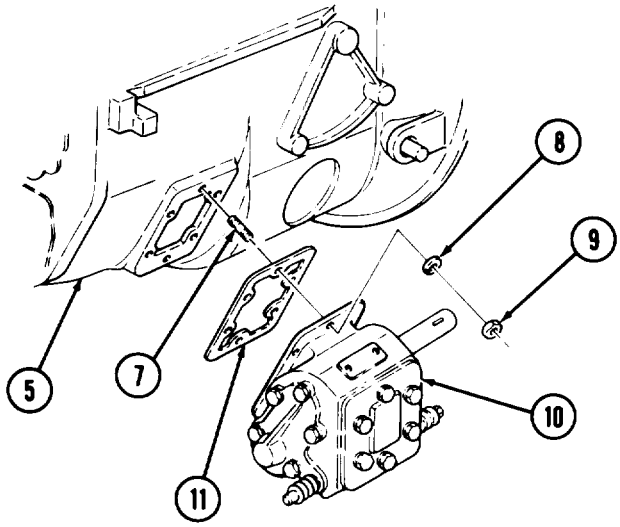

8-5. TRANSMISSION (OUT-OF-VEHICLE) REPLACEMENT (Contd)

b. Installation

NOTE

- Steps 1 and 2 apply to transmissions equipped with transmission power takeoff (PTO).
- Perform step 1 if stud(s) was removed.

1. Install stud(s) (1) in transmission (6).
2. Install new gasket (5) and PTO (4) on transmission (6) with six new lockwashers (2) and nuts (3).
3. Remove safety strap from transmission (6).

WARNING

Transmission lifting jack must have a weight capacity greater than the weight of the transmission to prevent damage to equipment and injury to personnel.

NOTE

Apply gasket sealant to gasket before installation.

4. Using transmission lifting jack, position transmission (6) on flywheel housing (10) and install new gasket (7) and transmission (6) on flywheel housing (10) with twelve new lockwashers (8) and screws (9). Tighten screws (9) 25-31 lb-ft (34-42 N•m).
5. Remove transmission lifting jack from under transmission (6).

8-5. TRANSMISSION (OUT-OF-VEHICLE) REPLACEMENT (Contd)

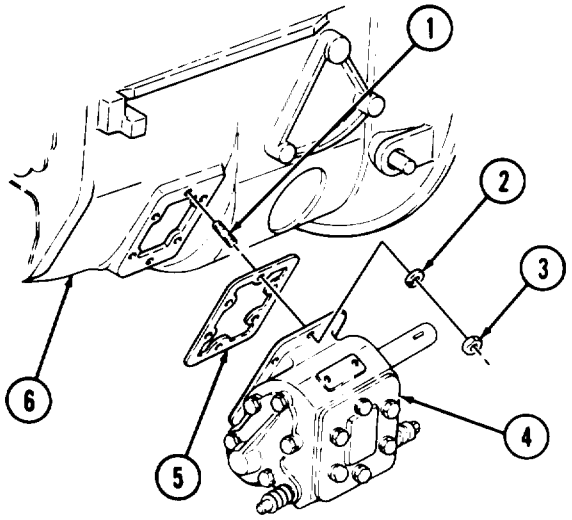

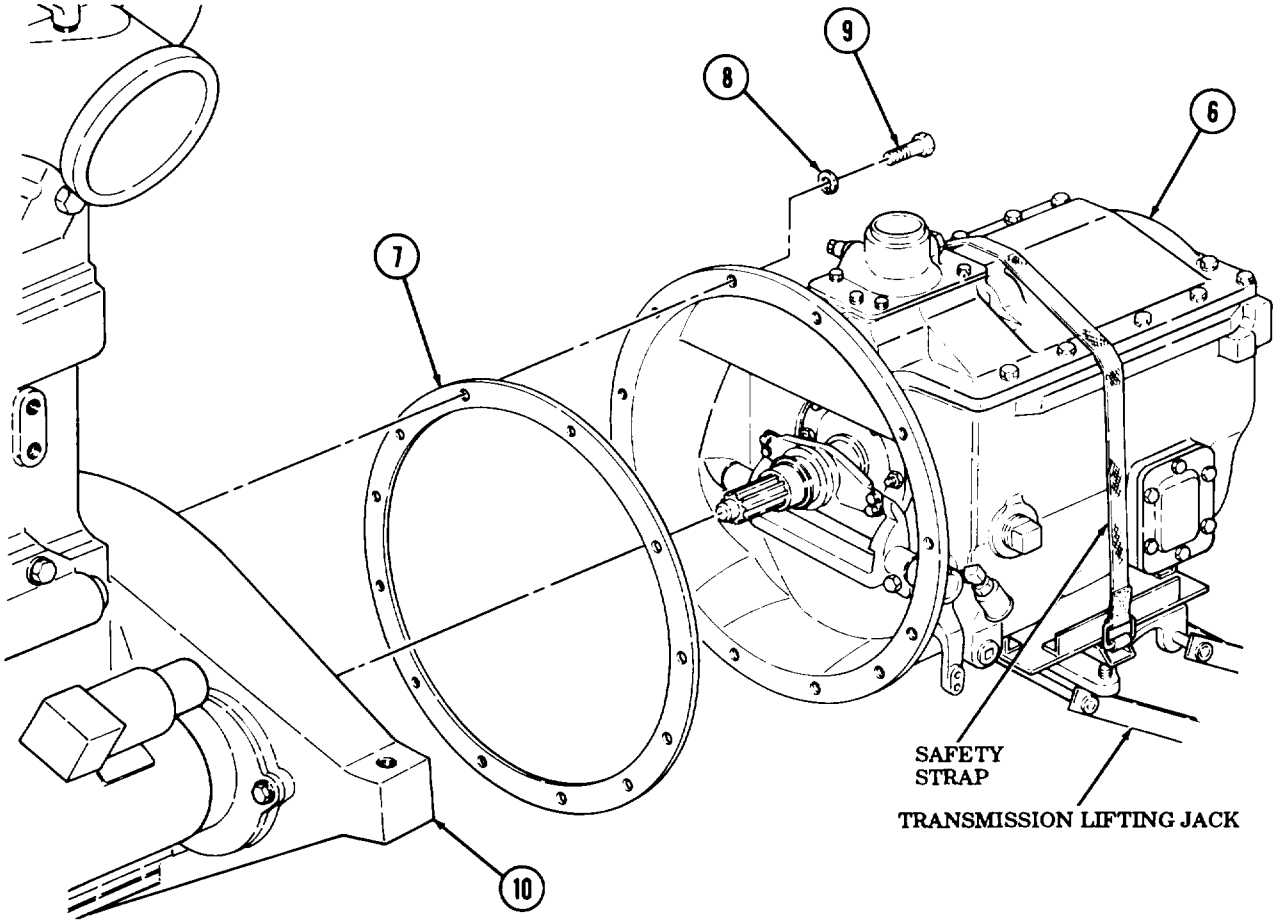

FOLLOW-ON TASK Install engine and transmission (para. 3-24).

8-6. TRANSMISSION MAINTENANCE

THIS TASK COVERS:

a. Disassembly
b. Cleaning and Inspection
c. Assembly

INITIAL SETUP

APPLICABLE MODELS
All

TOOLS
General mechanic's tool kit (Appendix B, Item 1)
Mechanical puller (Appendix B, Item 14)
Torque wrench, 3/4-in. dr. (Appendix B, Item 2)
2-318-in. socket, 1-in. dr. (Appendix B, Item 18)
314-in. to 1-in. adapter (Appendix B, Item 19)
2-1/8-in. socket, 1-in. dr. (Appendix B, Item 20)
Companion flange replacer (Appendix B, Item 96)
Inside micrometer (Appendix B, Item 9)
Outside micrometer (Appendix B, Item 8)
Arbor press (Appendix B, Item 7)
Lifting device
Rope sling

MATERIALS/PARTS
Thirteen lockwashers (Appendix D, Item 219)
Nine lockwashers (Appendix D, Item 223)
Eight lockwashers (Appendix D, Item 217)
Six lockwashers (vehicles with PTO) (Appendix D, Item 215)
Four lockwashers (Appendix D, Item 227)
Twelve screw-assembled lockwashers (all vehicles except M816) (Appendix D, Item 385)
Ten screw-assembled lockwashers (M816) (Appendix D, Item 385)
Six screw-assembled lockwashers (Appendix D, Item 389)
Six screw-assembled lockwashers (Appendix D, Item 387)

MATERIALS/PARTS (Contd)
Gasket (Appendix D, Item 134)
Gasket (Appendix D, Item 130)
Gasket (Appendix D, Item 155)
Two gaskets (Appendix D, Item 131)
Gasket (Appendix D, Item 133)
Gasket (Appendix D, Item 135)
Gasket (Appendix D, Item 136)
Gasket (Appendix D, Item 138)
Five setscrews (Appendix D, Item 487)
Two cotter pins (Appendix D, Item 23)
Seal (Appendix D, Item 420)
Seal (Appendix D, Item 428)
Seal (Appendix D, Item 430)
Four woodruff keys (Appendix D, Item 548)
Woodruff key (Appendix D, Item 546)
Three expansion plugs (Appendix D, Item 323)
Locknut (Appendix D, Item 166)
Snapring (Appendix D, Item 513)
Snapring (Appendix D, Item 514)
Snapring (Appendix D, Item 515)
Snapring (Appendix D, Item 516)
Snapring (Appendix D, Item 517)
GAA grease (Appendix C, Item 14)
Sealing compound (Appendix C, Item 43)
Two puller screws (Appendix C, Item 38)

REFERENCES (TM)
LO 9-2320-260-12
TM 9-2320-260-34P-1

EQUIPMENT CONDITION
- Transmission drained (LO 9-2320-260-12).
- Transmission removed (para. 8-4).

GENERAL SAFETY INSTRUCTIONS
All personnel must stand clear during lifting operations.

a. Disassembly

1. Remove four screws (1), lockwashers (2), two spring clips (5), and pads (29) from clutch release sleeve (28). Discard lockwashers (2).
2. Remove clutch release sleeve (28) from input shaft (9).
3. Remove grease fitting (26) and bearing (27) from clutch release sleeve (28).
4. Remove two screws (24), lockwashers (23), and spacers (22) from clutch release yoke (25). Discard lockwashers (23).

8-6. TRANSMISSION MAINTENANCE (Contd)

5. Remove locknut (17), screw (15), lever (16), and woodruff key (18) from clutch release shaft (14). Discard locknut (17) and woodruff key (18).
6. Remove clutch release shaft (14), clutch release yoke (25), seal (11), plug (30) from bell housing (6). Discard seal (11).
7. Remove seven nuts (3), lockwashers (4), bell housing (6), and gasket (7) from transmission (8). Discard lockwashers (4) and gasket (7).
8. Remove six screw-assembled lockwashers (19), inspection cover (20), and gasket (21) from bell housing (6). Discard screw-assembled lockwashers (19) and gasket (21).
9. Remove two grease cups (13) from elbows (12).
10. Remove two elbows (12) from bell housing (6).
11. Remove gasket (10) from transmission (8). Discard gasket (10).

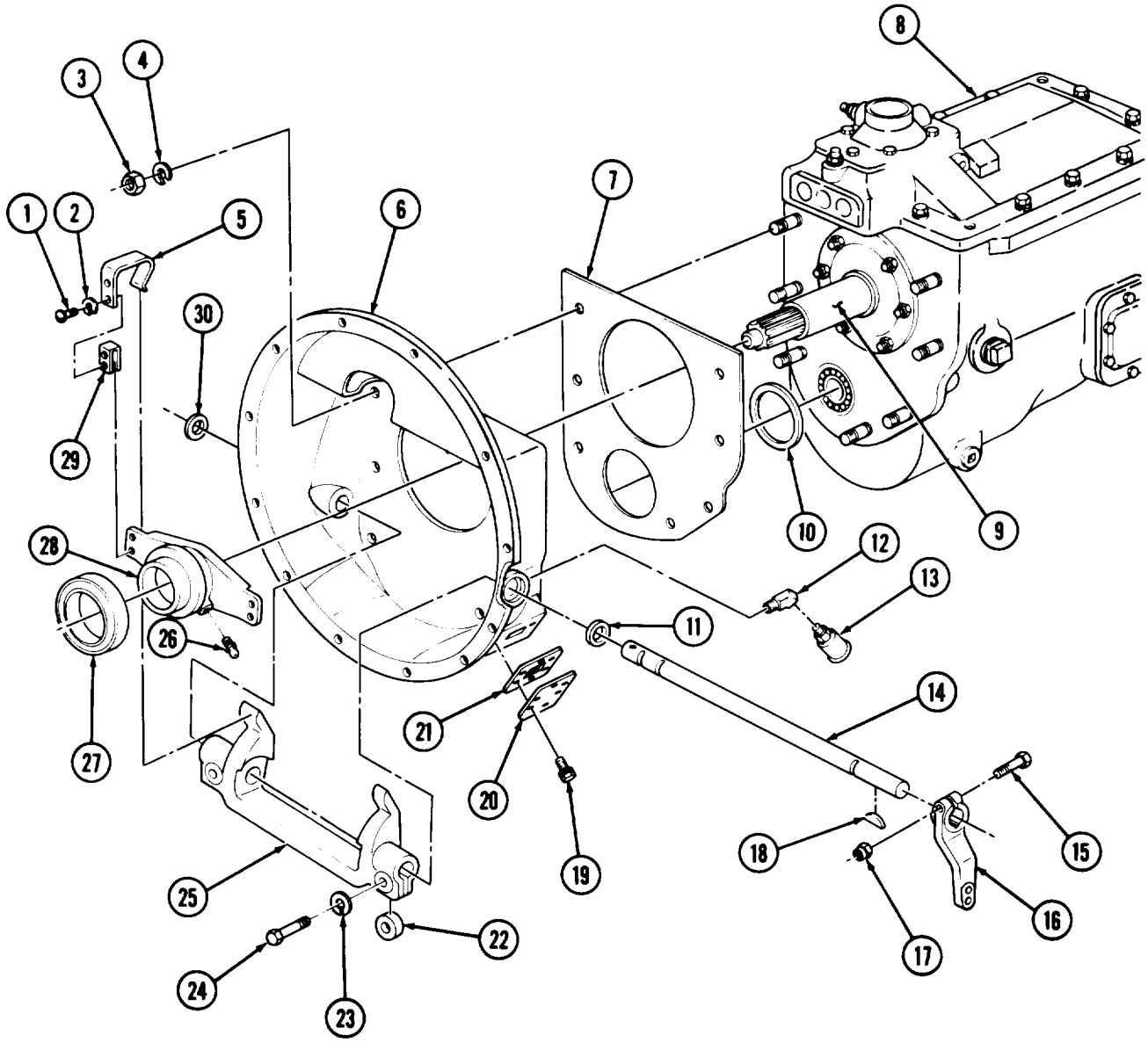

8-6. TRANSMISSION MAINTENANCE (Contd)

NOTE

- Perform step 12 forM816 vehicles. Perform step 13 for all vehicles except M816.
- For disassembly of shifter housing, proceed to para. 8-7, subtask b.

12. Remove ten screw-assembled lockwashers (2) from shifter housing (1). Discard screw-assembled lockwashers (2).
13. Remove twelve screw-assembled lockwashers (2) from shifter housing (1). Discard screw-assembled lockwashers (2).
14. Remove shifter housing (1) and gasket (3) from transmission (4). Discard gasket (3).
15. Remove six screw-assembled lockwashers (7), cover (6), and gasket (5) from transmission (4). Discard screw-assembled lockwashers (7) and gasket (5).

NOTE

Perform step 16 for transmissions equipped with transmission power takeoff (PTO).

16. Remove six nuts (19), lockwashers (18), PTO (20), and gasket (16) from studs (17). Discard lockwashers (18) and gasket (16).
17. Remove six nuts (11) and lockwashers (12) from studs (15). Discard lockwashers (12).

NOTE

Tighten puller screws evenly until input shaft cover is free from transmission.

18. Using two puller screws, remove input shaft. cover (13), seal (10), and gasket (14) from transmission (4). Discard seal (10) and gasket (14).
19. Remove two puller screws from input shaft cover (13).

NOTE

When removing input shaft, fourteen roller bearings may fall into bottom of transmission case. Roller bearings must be retained for assembly.

20. Remove input shaft (9) and fourteen roller bearings (8) from transmission (4).

8-6. TRANSMISSION MAINTENANCE (Contd)

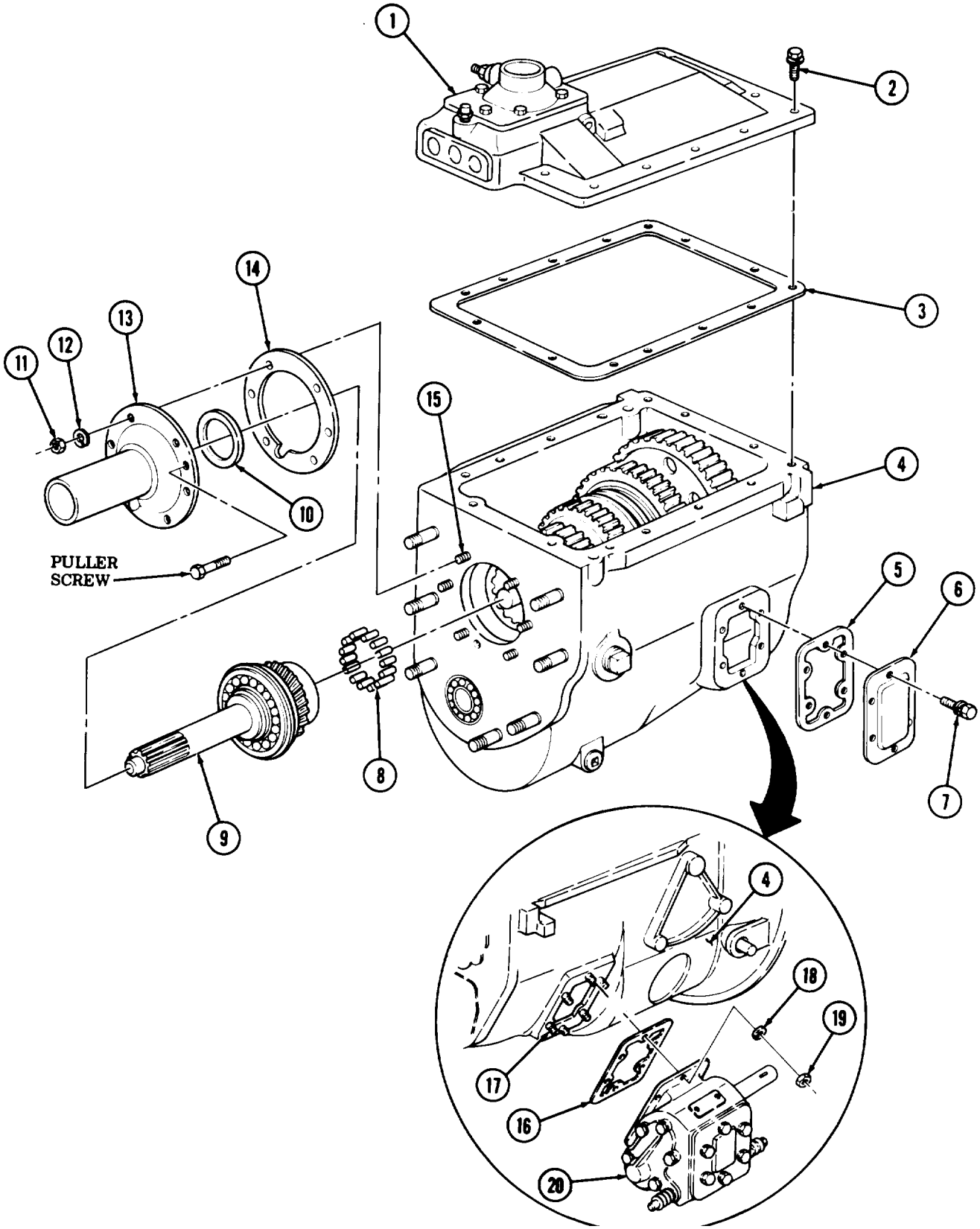

8-6. TRANSMISSION MAINTENANCE (Contd)

21. Remove cotter pin (18) and nut (1) from output shaft (9) and companion flange (2). Discard cotter pin (18).

NOTE

Tighten puller screws evenly until companion flange is free from transmission.

22. Using flange replacer, remove companion flange (2) and shield (3) from output shaft (9).
23. Remove four screws (4), lockwashers (5), output shaft cover (6), and gasket (7) from transmission case (8). Discard gasket (7) and lockwashers (5).
24. Remove seal (19) from output shaft cover (6). Discard seal (19).
25. Remove four screws (17), lockwashers (16), countershaft rear cover (15), and gasket (14) from transmission case (8). Discard gasket (14) and lockwashers (16).
26. Remove spacer washer (11) from output shaft (9).
27. Remove cotter pin (13) and nut (12) from countershaft (10). Discard cotter pin (13).

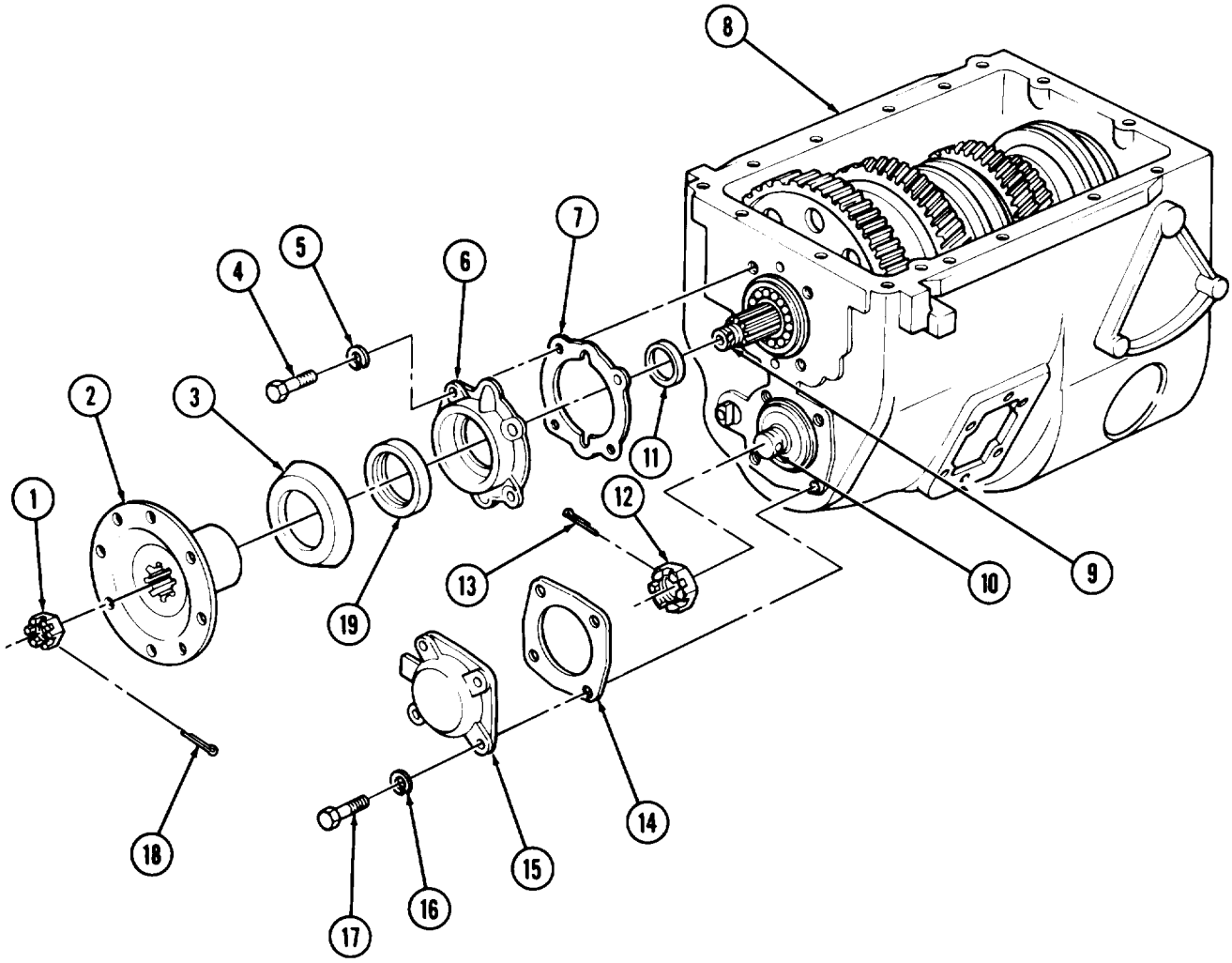

8-6. TRANSMISSION MAINTENANCE (Contd)

28. Remove snapring (22) and rear mainshaft bearing (21) from transmission case (8).
29. Slide mainshaft (20) to rear of transmission case (8) and remove fourth/fifth gear synchronizer (19) from mainshaft (20).
30. Install rope sling on mainshaft (20).
31. Install lifting device on rope sling.

WARNING

All personnel must stand clear during lifting operations. A swinging or shifting load may cause injury to personnel.

32. Remove mainshaft (20) from transmission case (8) and lower onto wooden supports.
33. Remove lifting device from rope sling.
34. Remove rope sling from mainshaft (20).
35. Remove reverse idler gearshaft (27) and reverse idler gear (24) from transmission case (8).
36. Remove two bearings (23) from reverse idler gear (24).
37. Remove snapring (26) and rear countershaft bearing (25) from transmission case (8).

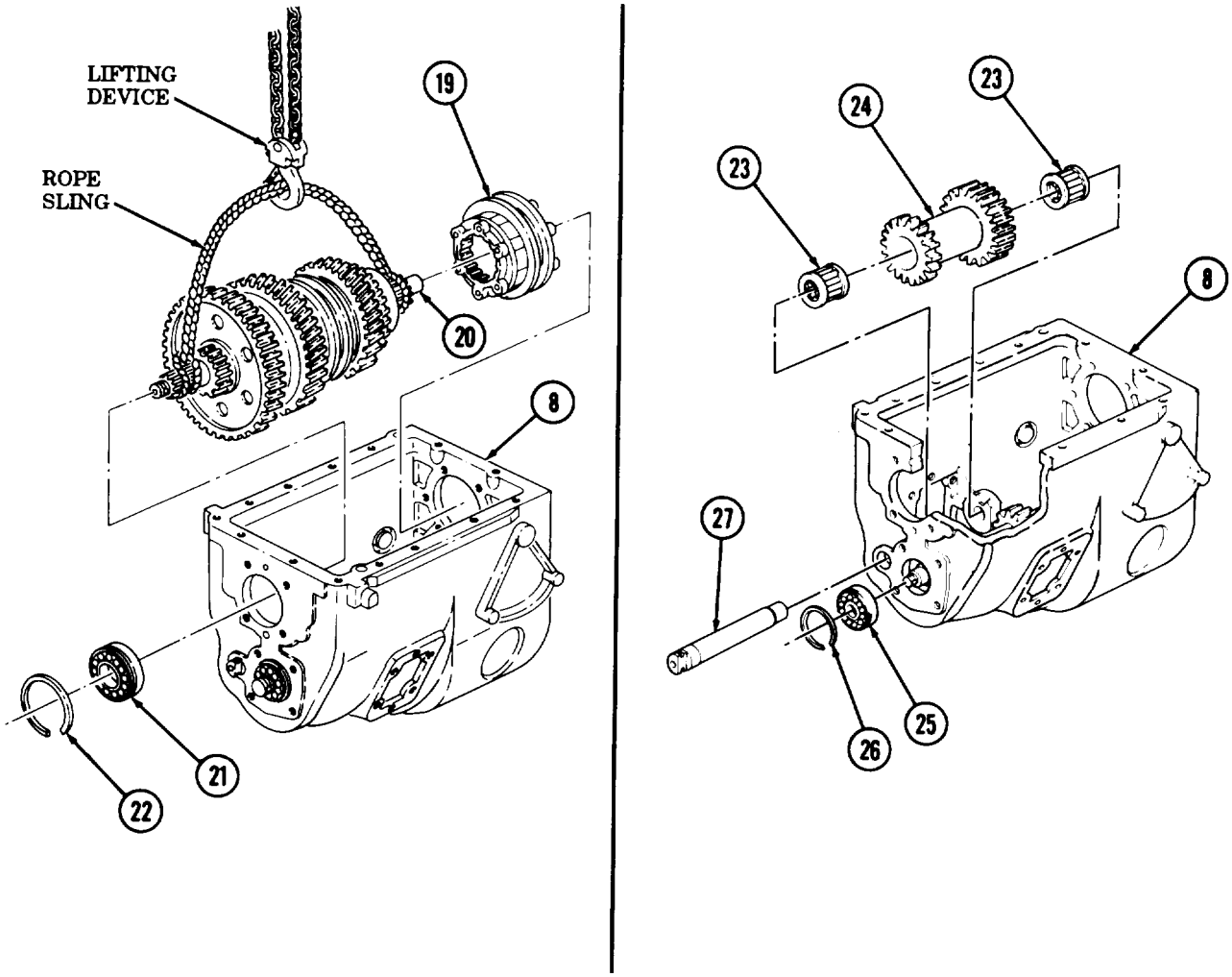

8-6. TRANSMISSION MAINTENANCE (Contd)

38. Remove countershaft front bearing (3) from transmission case (2).
39. Install rope sling on countershaft (1).
40. Install lifting device on rope sling.

WARNING

All personnel must stand clear during lifting operations. A swinging or shifting load may cause injury to personnel.

41. Remove countershaft (1) from transmission case (2) and lower onto supports.
42. Remove lifting device from rope sling.
43. Remove rope sling from countershaft (1).
44. Remove snapring (8), thrust washer (9), fifth speed gear (7), and fith speed gear sleeve (10) from mainshaft (5). Discard snapring (8).
45. Remove pin (11) from fifth speed gear sleeve (10).
46. Remove fourth speed gear (12) and gear synchronizer (13) from main shaft (5).
47. Remove snapring (14), second/third speed clutch gear (15), second/third speed gear (6), and first/reverse speed gear (4) from mainshaft (5). Discard snapring (14).
48. Remove snapring (27) from countershaft (18). Discard snapring (27).
49. Remove countershaft (18) from countershall drive gear (26).
50. Remove woodruff key (19) from countershaft (18). Discard woodruff key (19).
51. Remove snapring (25) from countershaft (18). Discard snapring (25).
52. Remove countershaft (18) from fourth speed gear (24).
53. Remove woodruff key (20) from countershaft (18). Discard woodruff key (20).
54. Remove countershaft (18) from third speed gear (23).
55. Remove woodruff key (21) from countershaft (18). Discard woodruff key (21).
56. Remove spacer (16) from countershaft (18).
57. Remove countershaft (18) from second speed gear (17).
58. Remove woodruff key (22) from countershaft (18). Discard woodruff key (22).
59. Remove snapring (30) from input shaft (28). Discard snapring (30).
60. Remove input shaft ball bearing (29) from input shaft (28).

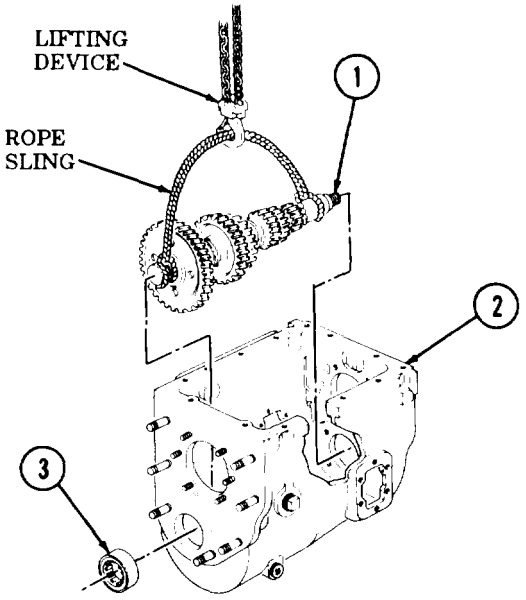

8-6. TRANSMISSION MAINTENANCE (Contd)

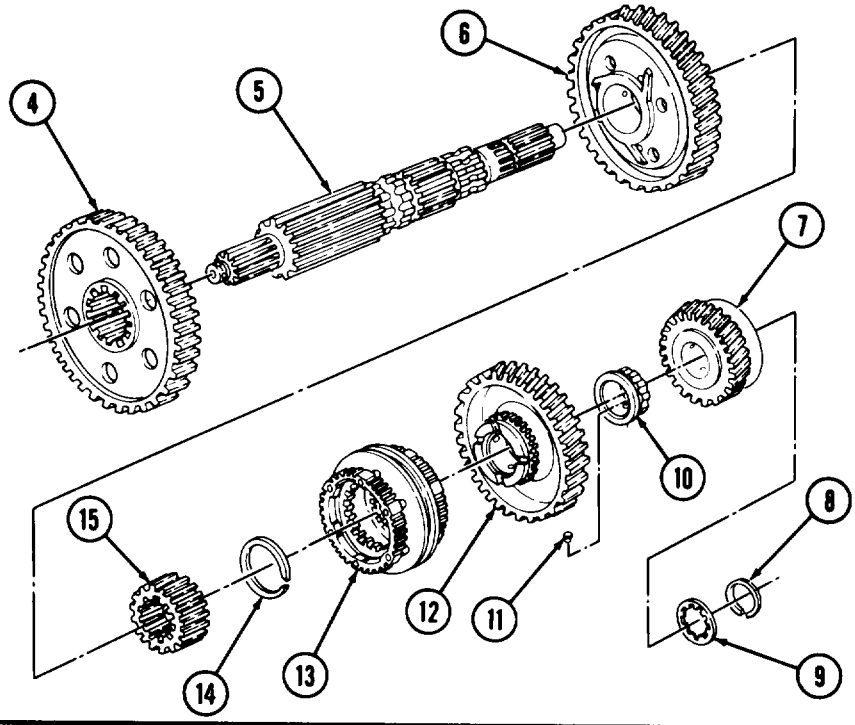

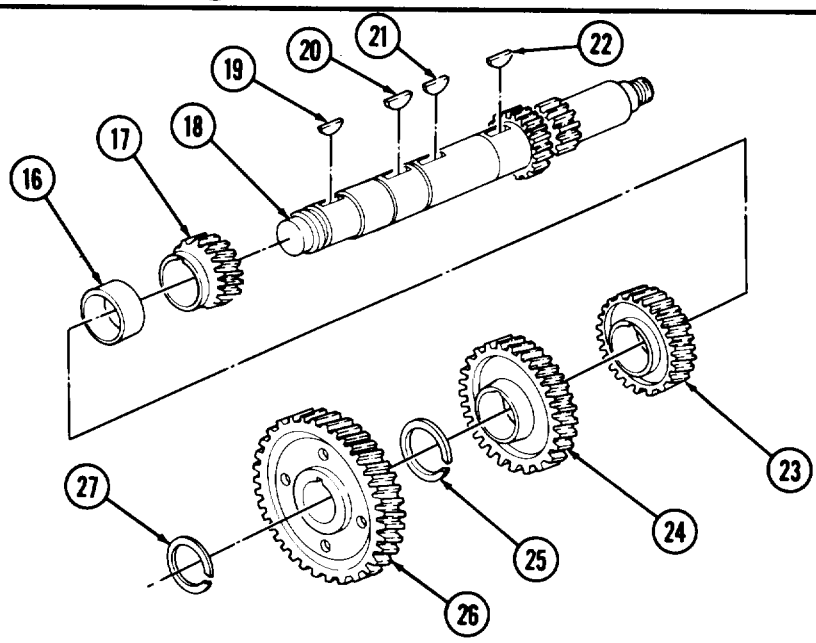

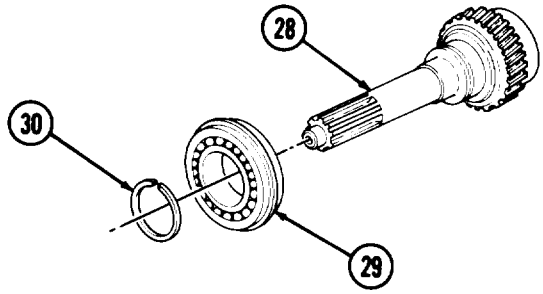

8-6. TRANSMISSION MAINTENANCE (Contd)

61. Remove filler plug (4) and drainplug (5) from transmission case (1).
62. Remove seven studs (9) from transmission case (1).
63. Remove six studs (8) from transmission case (1).

b. Cleaning and Inspection

1. For general cleaning instructions, refer to para. 2-8.
2. For general inspection instructions, refer to para. 2-9.
3. Inspect transmission bearing bores (2), (3), (6) and (7) for wear. Refer to table 8-1, Wear Limits, for measurements. Replace transmission case (1) if bores (2), (3), (6), or (7) are worn past limits.

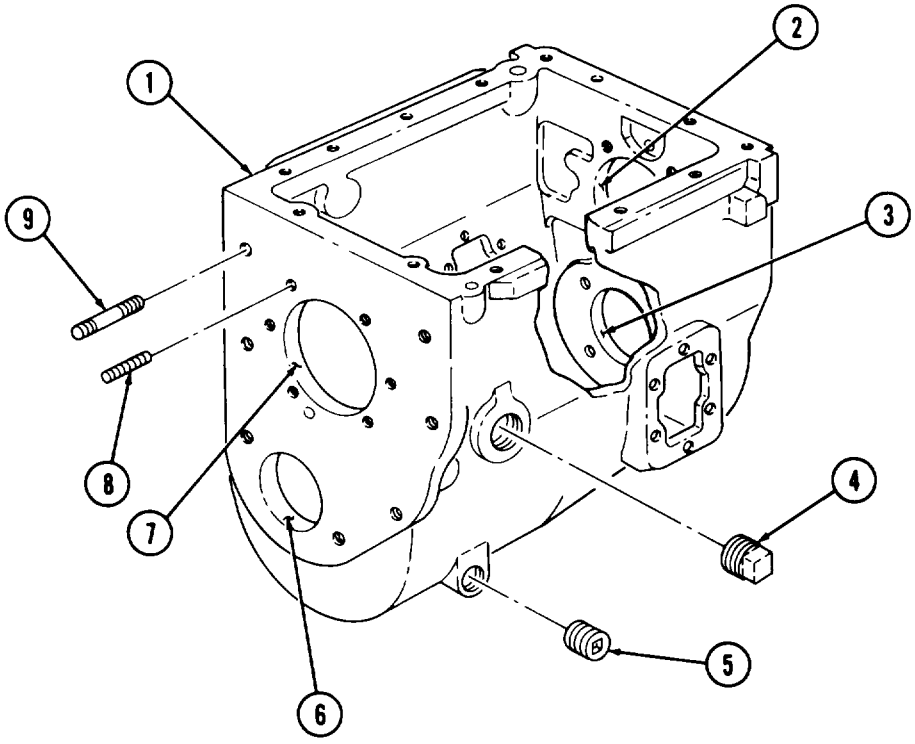

Table 8-1. *Wear Limits.*

ITEM NO.	ITEM/POINT OF MEASUREMENT	WEAR LIMITS/TOLERANCES	
		INCHES	MILLIMETERS
2	Inside diameter	4.7239-4.7249	119.9871-120.0012
3	Inside diameter	4.3302-4.3312	109.9871-110.0125
6	Inside diameter	3.3465-3.3475	85.0011-85.0265
7	Inside diameter	5.5118-5.5130	139.9972-140.0302

8-6. TRANSMISSION MAINTENANCE (Contd)

4. Inspect bearings (10), (11), and (12) for wear. Refer to table 8-2, Wear Limits, for measurements. Replace bearings (10), (11), or (12) if worn past limits.

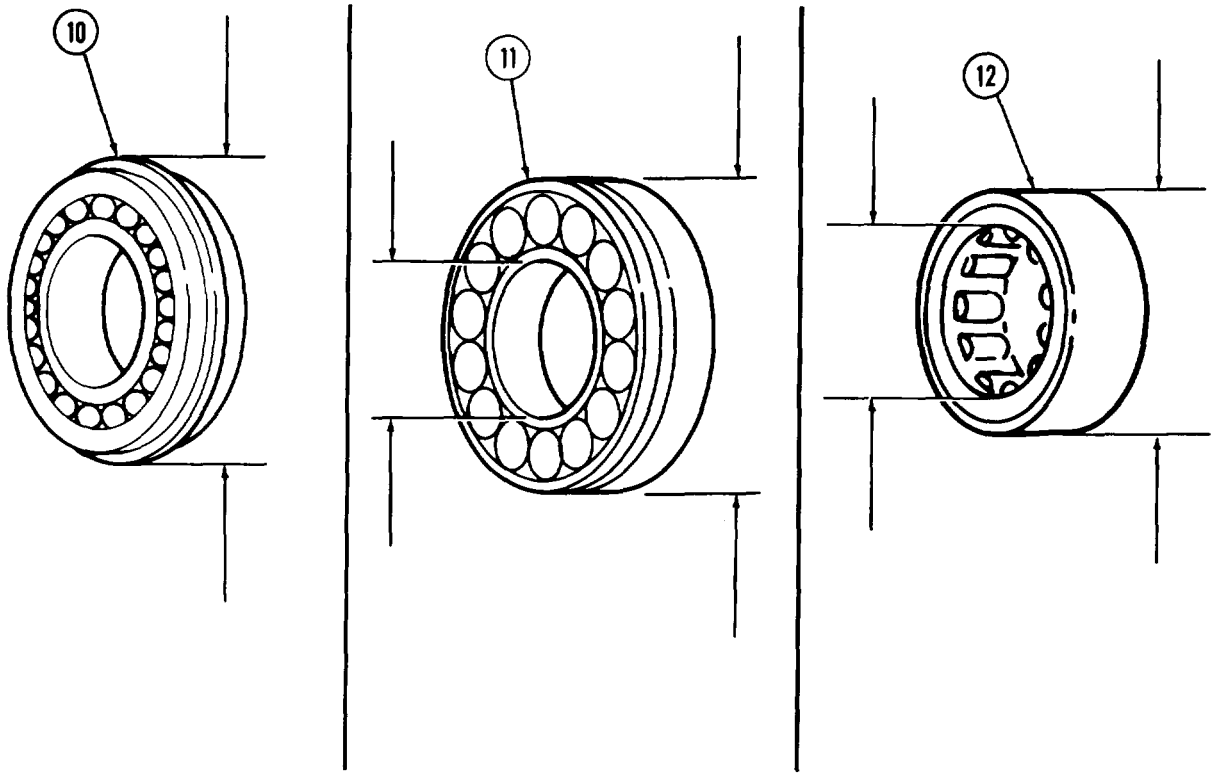

Table 8-2. Wear Limits.

ITEM NO.	ITEM/POINT OF MEASUREMENT	WEAR LIMITS/TOLERANCES	
		INCHES	MILLIMETERS
10	Input shaft bearing – outside diameter	3.3453-3.3465	84.9706-85.0011
11	Countershaft rear bearing		
	Outside diameter	4.7238-4.7244	119.9845-119.9998
	Inside diameter	2.5591-2.5597	65.0011-65.0164
12	Countershaft front bearing		
	Outside diameter	3.3455-3.3465	84.9757-85.0011
	Inside diameter	1.7717-1.7727	45.0021-45.0265

8-6. TRANSMISSION MAINTENANCE (Contd)

5. Inspect main shaft (1), countershaft (2), reverse idler gearshaft (3), and input shaft (4) for wear. Refer to table 8-3, Wear Limits, for measurements. Replace main shaft (1), countershaft (2), reverse idler gearshaft (3), or input shaft (4) if worn past limits.

Table* 8-3. *Wear Limits.

ITEM NO.	ITEM/POINT OF MEASUREMENT	WEAR LIMITS/TOLERANCES	
		INCHES	CENTIMETERS
1	MAINSHAFT		
	(a) outside diameter	1.3096-1.3101	3.3264-3.3277
	(b) outside diameter	1.998-1.999	5.0749-5.0775
	(c) outside diameter	2.1650-2.1655	5.4991-5.5004
	(d) outside diameter	3.4650-3.4655	8.8011-8.8024
	(e) outside diameter	1.3096-1.3101	3.3264-3.3277
	(f) outside diameter	2.2415-2.2420	5.6934-5.6947
	(g) outside diameter	2.2545-2.2550	5.7264-5.7277
	(h) outside diameter	2.495-2.505	6.3373-6.3627
	(i) outside diameter	2.8715-2.8720	7.2936-7.2949
	(j) outside diameter	2.8730-2.8735	7.2974-7.2987
2	COUNTERSHAFT		
	(k) outside diameter	2.1865-2.1871	5.5537-5.5552
	(l) outside diameter	2.319-2.324	5.8903-5.9030
	(m) outside diameter	2.376-2.377	6.0350-6.0376
	(n) outside diameter	2.610-2.615	6.6294-6.6421
	(o) outside diameter	2.623-2.624	6.6624-6.6650
	(p) outside diameter	2.626-2.627	6.6700-6.6726
	(q) outside diameter	2.631-2.632	6.6827-6.6853
	(r) outside diameter	3.869-3.879	9.8273-9.8527
	(s) outside diameter	3.152-3.162	8.0061-8.0315
	(t) outside diameter	1.9683-1.9687	4.9995-5.0005
3	REVERSE IDLER GEARSHAFT		
	(u) outside diameter	1.2515-1.2520	3.1788-3.1801
	(v) outside diameter	1.2495-1.2500	3.1737-3.1750
	(w) outside diameter	0.9995-1.0000	2.5387-2.5400
4	INPUT SHAFT		
	(x) outside diameter	1.1793-1.1803	2.9954-2.9980
	(y) outside diameter	1.739-1.741	4.4171-4.4221
	(z) outside diameter	1.781-1.784	4.5237-4.5314
	(aa) inside diameter	2.0626-2.0634	5.2390-5.2410
	(bb) outside diameter	5.475-5.485	13.9065-13.9319

8-6. TRANSMISSION MAINTENANCE (Contd)

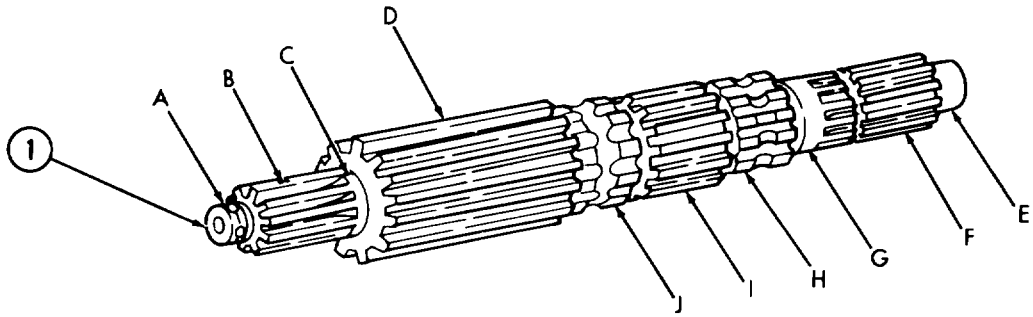

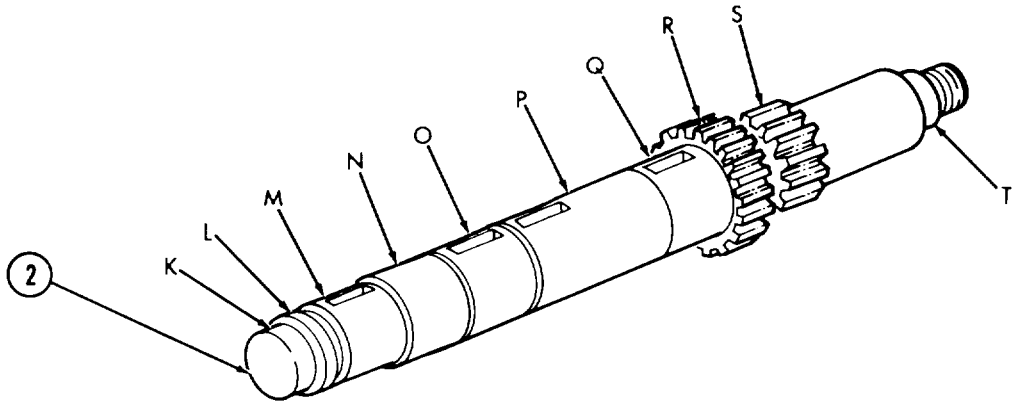

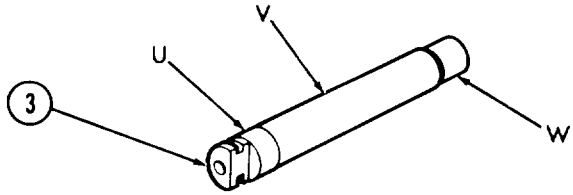

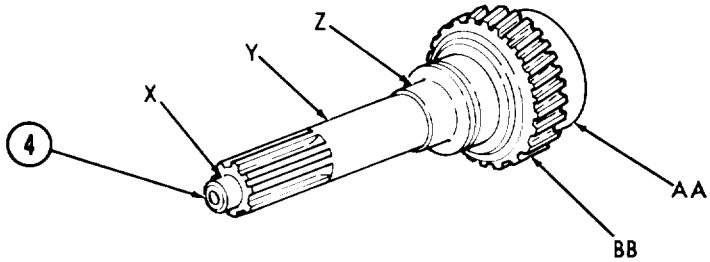

8-6. TRANSMISSION MAINTENANCE (Contd)

6. Inspect gears (1), (2), (3), and (4) for wear. Refer to table 8-4, Wear Limits, for measurements. Replace gears (1), (2), (3), and (4) if worn past limits.
7. Inspect thrust washer (5) for wear. Refer to table 8-4, Wear Limits, for measurements. Replace thrust washer (5) if worn past limits.

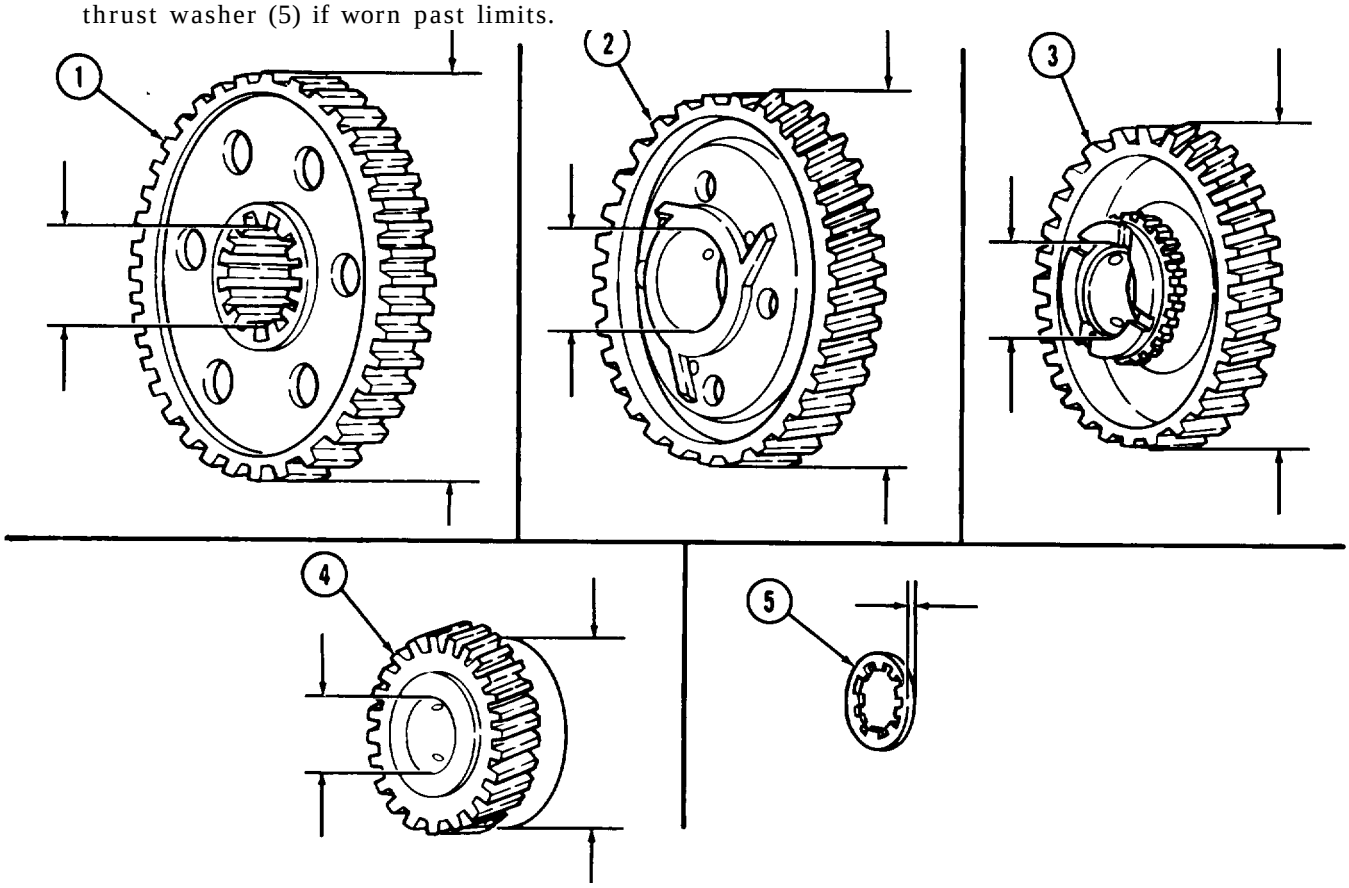

Table 8-4. Wear Limits.

ITEM NO.	ITEM/POINT OF MEASUREMENT	WEAR LIMITS/TOLERANCES	
		INCHES	MILLMETERS
1	First/reverse gear		
	Inside diameter	3.4670-3.4695	88.0618-88.1253
	Outside diameter	10.462-10.472	265.2735-265.9888
2	Second/third gear		
	Inside diameter	2.8765-2.8770	73.0631-73.0758
	Outside diameter	9.139-9.149	232.1306-232.3846
3	Fourth gear		
	Inside diameter	2.6250-2.6255	66.6750-66.6877
	Outside diameter	7.297-7.307	185.3438-185.5978
4	Fifth gear		
	Inside diameter	2.7537-2.7540	69.0440-69.9516
	Outside diameter	4.763-4.773	120.9802-121.2342
5	Thrust washer - thickness	0.151-0.153	3.8354-3.8862

8-6. TRANSMISSION MAINTENANCE (Contd)

8. Inspect gears (6), (7), (8), (9), (10), and (11) for wear. Refer to table 8-5, Wear Limits, for measurements. Replace gear (6), (7), (8), (9), (10), or (11) if worn past limits.

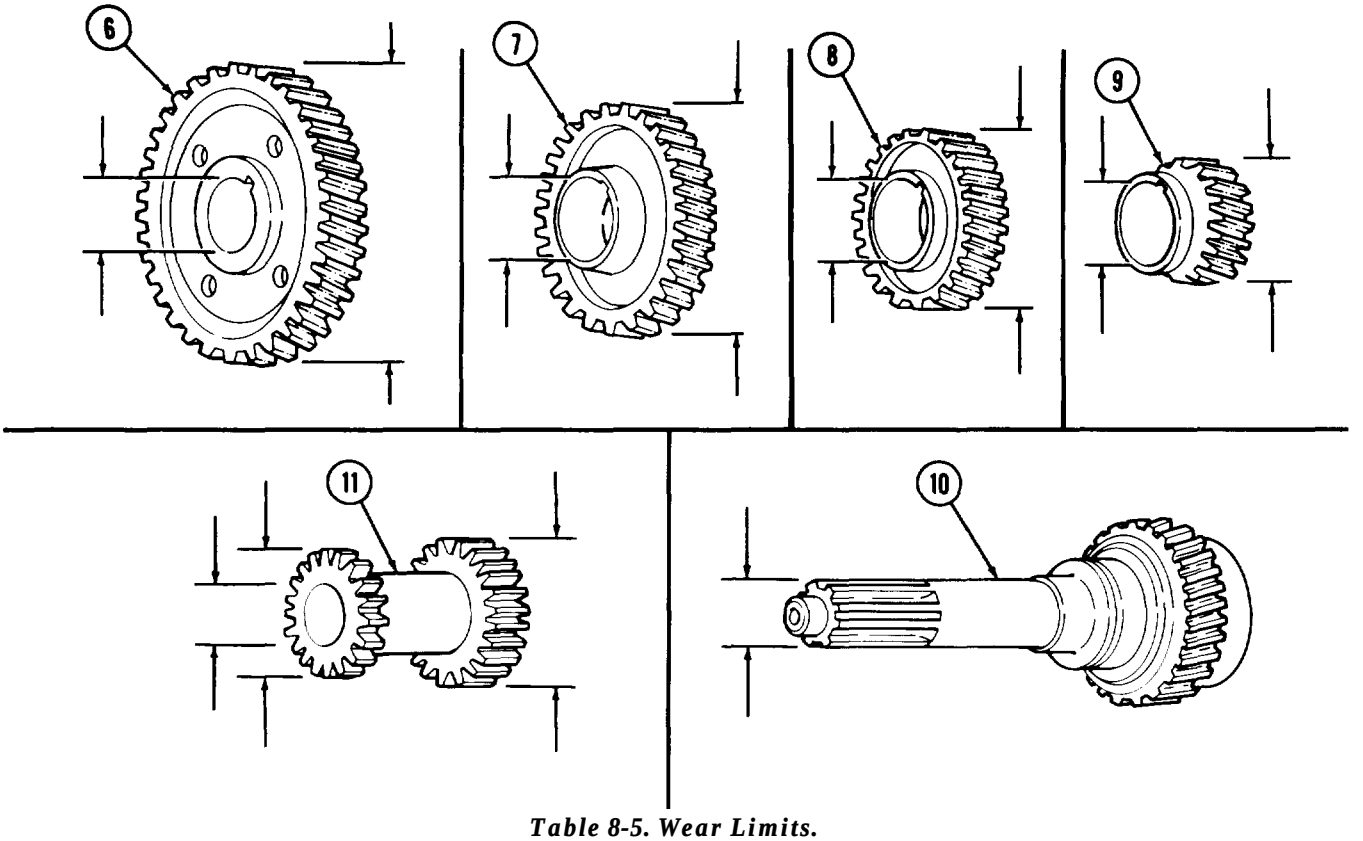

Table 8-5. Wear Limits.

ITEM NO.	ITEM/POINT OF MEASUREMENT	WEAR LIMITS/TOLERANCES	
		INCHES	MILLIMETERS
6	Countershaft drive gear		
	Inside diameter	2.3745-2.3755	60.3123-60.3377
	Outside diameter	8.255-8.265	209.6670-209.9310
7	Countershaft fourth gear		
	Inside diameter	2.6215-2.6225	66.5861-66.6151
	Outside diameter	8.967-8.977	227.7618-228.0158
8	Countershaft third gear		
	Inside diameter	2.6245-2.6255	66.6623-66.6877
	Outside diameter	6.429-6.439	165.2966-163.5506
9	Countershaft second gear		
	Inside diameter	2.6295-2.6305	66.7893-66.8147
	Outside diameter	4.599-4.609	116.8146-117.0686
10	Output shaft – outside diameter	5.475-5.485	139.0650-139.3190
11	Reverse idler gear		
	Inside diameter (bearing journals)	2.0005-2.0015	50.8127-50.8381
	Outside diameter (large gear)	4.525-4.535	114.9350-115.1890
	Outside diameter (small gear)	3.652-3.662	92.7608-93.0148

8-6. TRANSMISSION MAINTENANCE (Contd)

c. Assembly

1. Install six studs (5) in transmission case (2).
2. Install seven studs (1) in transmission case (2).
3. Install filler plug (3) and drain plug (4) in transmission case (2).
4. Install input shaft ball bearing (7) onto input shaft (8).
5. Install new snapring (6) on input shaft (8).
6. Install new woodruff key (15) on countershaft (11).
7. Install second speed gear (10) onto countershaft (11) and over woodruff key (15).
8. Install spacer (9) on countershaft (11).
9. Install new woodruff key (14) on countershaft (11).
10. Install third speed gear (16) onto countershaft (11) and over woodruff key (14).
11. Install new woodruff key (13) on countershaft (11).
12. Install fourth speed gear (17) onto countershaft (11) and over woodruff key (13).
13. Install new snapring (18) on countershaft (11).
14. Install new woodruff key (12) on countershaft (11).
15. Install countershaft drive gear (20) onto countershaft (11) and over woodruff key (12).
16. Install new snapring (19) on countershaft (11).

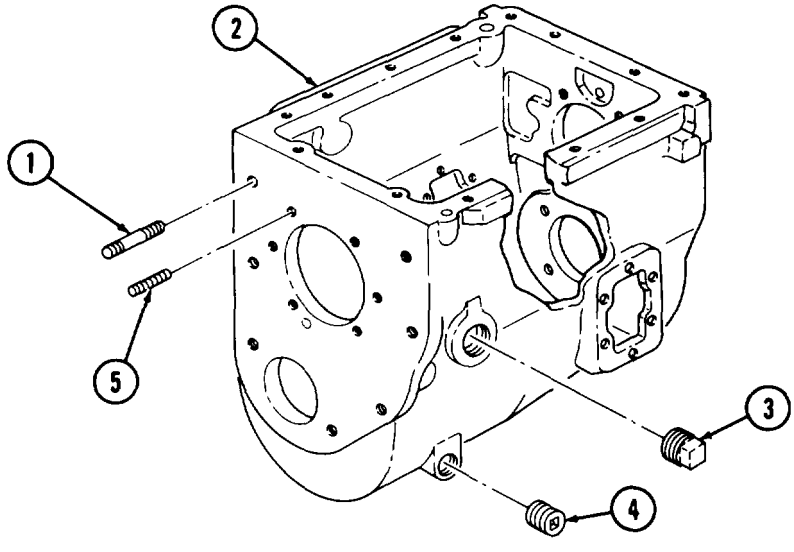

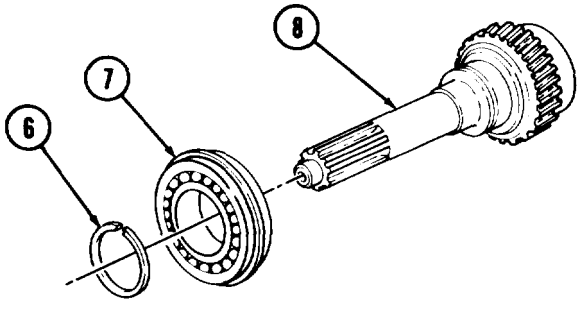

8-6. TRANSMISSION MAINTENANCE (Contd)

17. Install first/reverse speed gear (21) on mainshaft (22).
18. Install second speed gear (23) and second speed clutch gear (32) on mainshaft (22) with new snap-ring (31).
19. Install third speed gear synchronizer (30) and third speed gear (29) on mainshaft (22).
20. Install pin (28) in fourth speed gear sleeve (27).
21. Install fourth speed gear sleeve (27) and fourth speed gear (24) on mainshaft (22).
22. Install thrust washer (26) and new snapring (25) on mainshaf't (22).

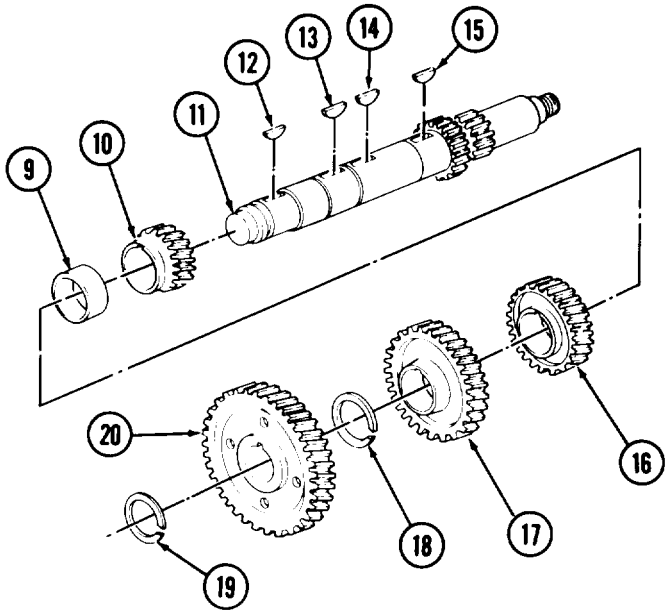

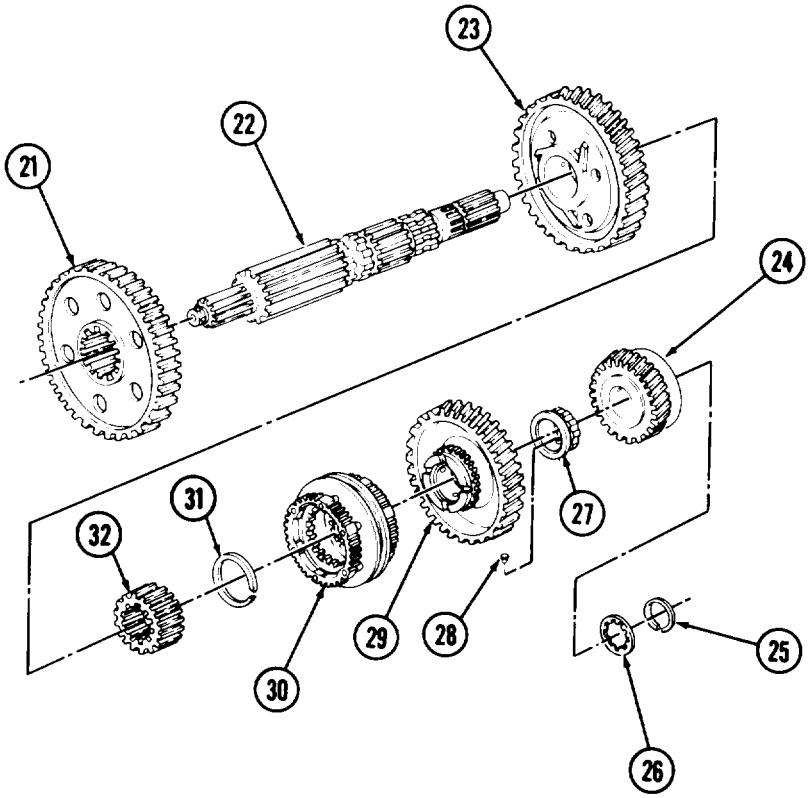

8-6. TRANSMISSION MAINTENANCE (Contd)

23. Install rope sling on countershaft (1).
24. Install lifting device on rope sling.

WARNING

All personnel must stand clear during lifting operations. A swinging or shifting load may cause injury to personnel.

25. Raise countershaft (1) and lower into transmission case (2).
26. Install countershaft front bearing(3) in transmission case (2).
27. Remove lifting device from rope sling.
28. Remove rope sling from countershaft (1).

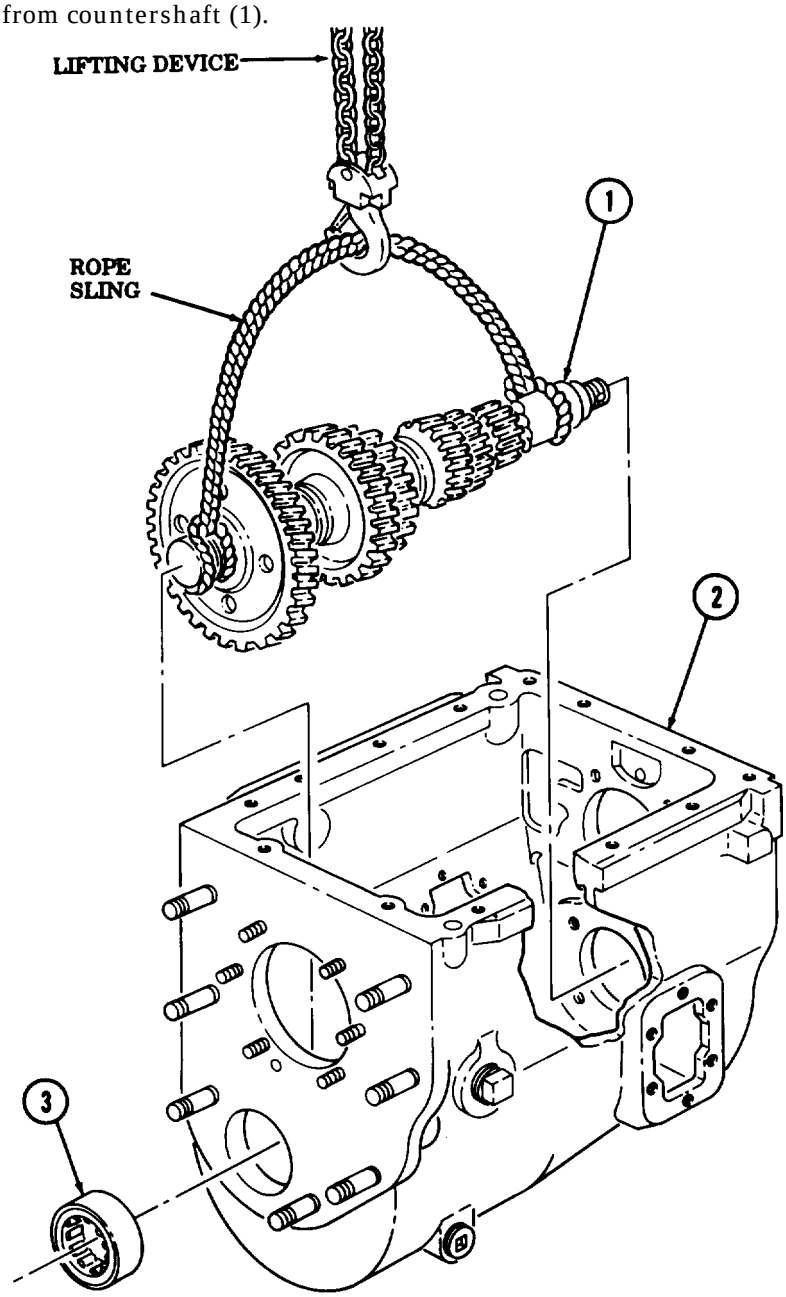

8-6. TRANSMISSION MAINTENANCE (Contd)

29. Install countershaft rear bearing (6) and new snapring (7) on transmission case (2).
30. Install two bearings (4) in reverse idler gear (5).
31. Install reverse idler gear (5) in transmission case (2) with reverse idler gearshaft (8).

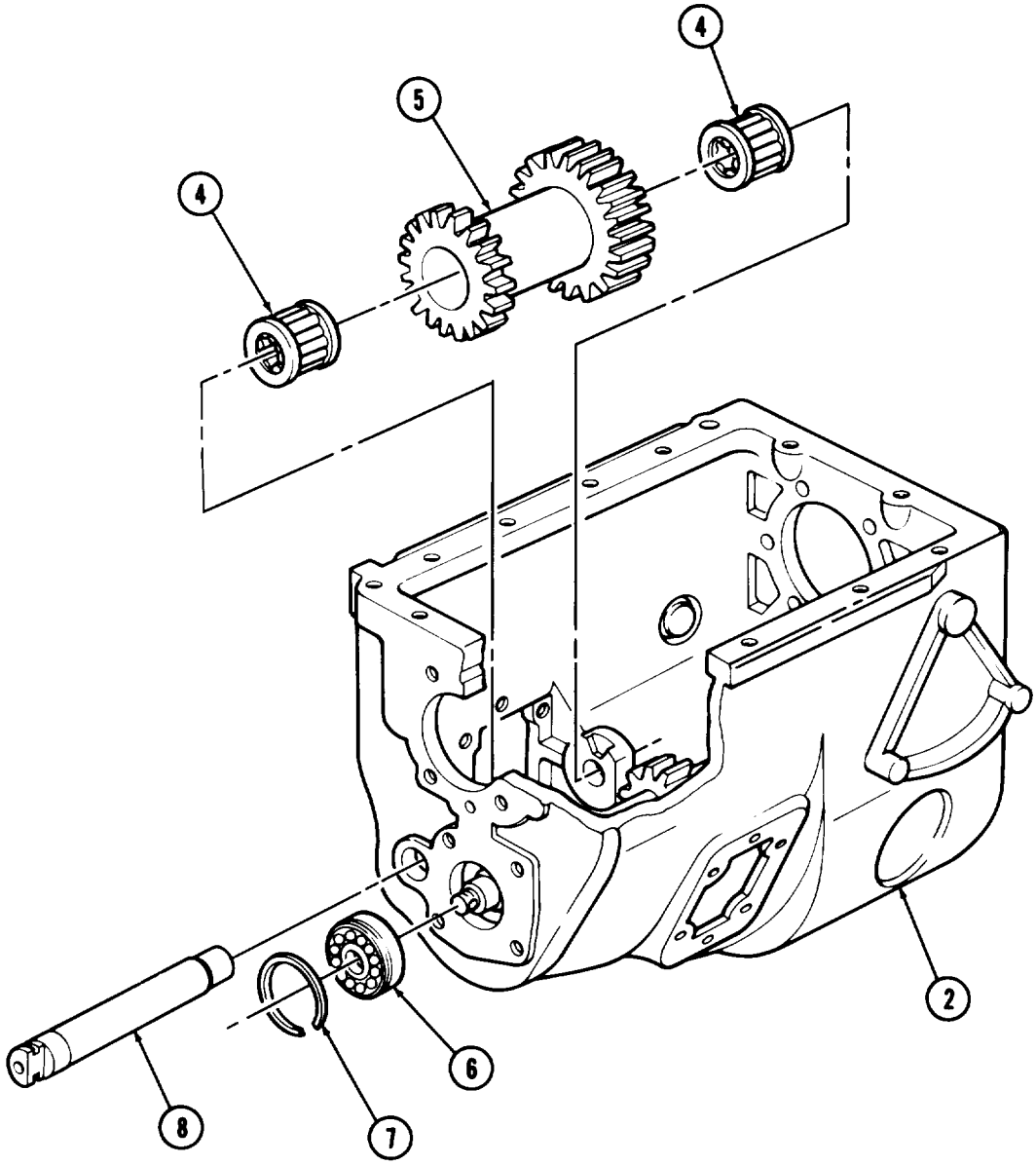

8-6. TRANSMISSION MAINTENANCE (Contd)

32. Install rope sling on mainshaft (1).
33. Install lifting device on rope sling.

WARNING

All personnel must stand clear during Ming operations. A swinging or shifting load may cause injury to personnel.

34. Raise mainshaft (1) and lower into transmission case (3).
35. Slide mainshaft (1) to rear of transmission case (3) and position fourth/fifth gear synchronizer (2) on mainshaft (1).
36. Install mainshaft rear bearing (4) and new snapring (5) on mainshaft (1) in transmission case (3).
37. Remove lifting device from rope sling.
38. Remove rope sling from main shaft (1).

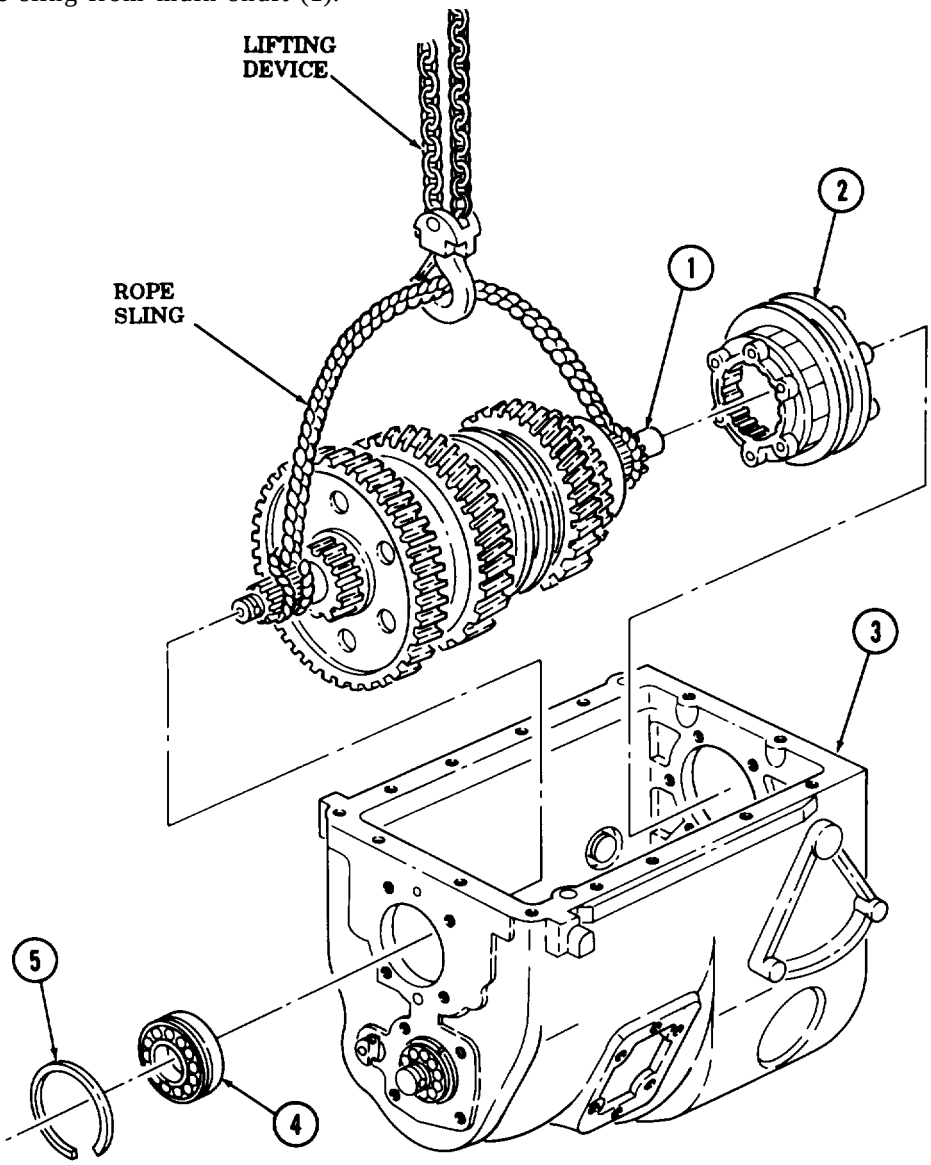

8-6. TRANSMISSION MAINTENANCE (Contd)

39. Install nut (16) on countershaft (14). Tighten nut (16) 550-600 lb-ft (746-814 N•m).
40. Install new cotter pin (18) through nut (16) and countershaft (14).
41. Position spacer washer (15) on output shaft (13).

NOTE

Apply sealing compound to gaskets before installation.

42. Install new gasket (17) and countershaft rear cover (19) on transmission case (3) with four new lockwashers (20) and screws (21).
43. Install new seal (22) on output shaft cover (11).
44. Install new gasket (12) and output shaft cover (11) on transmission case (3) with four new lockwashers (10) and screws (9).
45. Install shield (8) and companion flange (7) on output shaft (13) with nut (6). Tighten nut (6) 500-550 lb-ft (678-746 N•m).
46. Install new cotter pin (23) through nut (6) and output shaft (13).

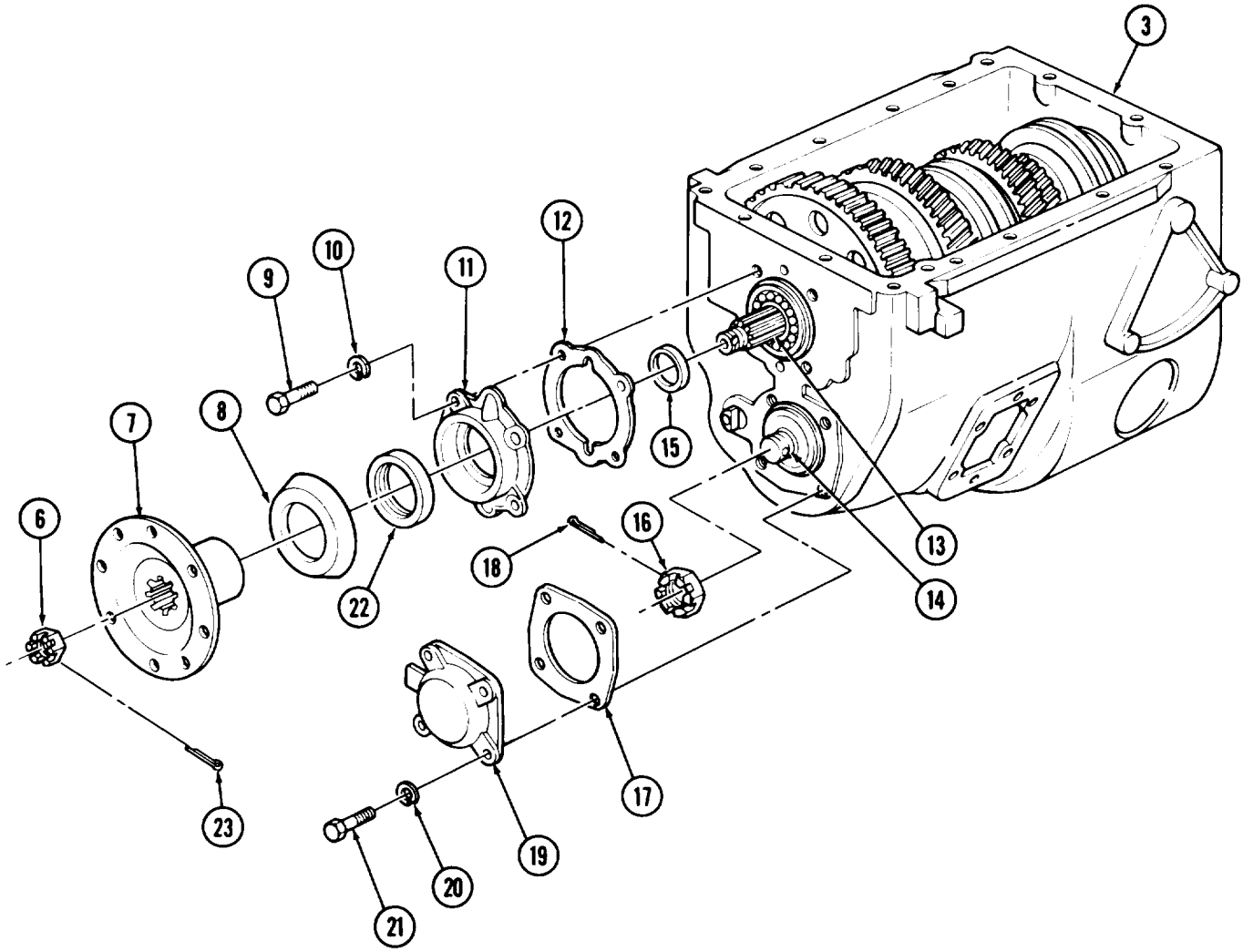

8-6. TRANSMISSION MAINTENANCE (Contd)

NOTE

Pack roller bearing race with GAA grease before installation.

47. Install fourteen roller bearings (12) in input shaft (13).
48. Install input shaft (13) on transmission (8).

NOTE

Apply sealing compound to gaskets before installation.

49. Install new gasket (4), new seal (15), and input shaft cover (3) on studs (14) with six new lockwashers (2) and nuts (1).

NOTE

Steps 50 and 51 apply to transmissions equipped with transmission power takeoff (PTO).

50. Install six studs (17) on transmission case (8).
51. Install new gasket (16) and PTO (20) on transmission (8) with six new lockwashers (18) and nuts (19).
52. Install new gasket (9) and cover (10) on transmission (8) with six new screw-assembled lockwashers (11).

NOTE

Perform step 53 on M816 vehicles. Perform step 54 for all vehicles except M816.

53. Install new gasket (5) and shifter housing (6) on transmission (8) with ten new screw-assembled lockwashers (7).
54. Install new gasket (5) and shifter housing (6) on transmission (8) with twelve new screw-assembled lockwashers (7).

8-6. TRANSMISSION MAINTENANCE (Contd)

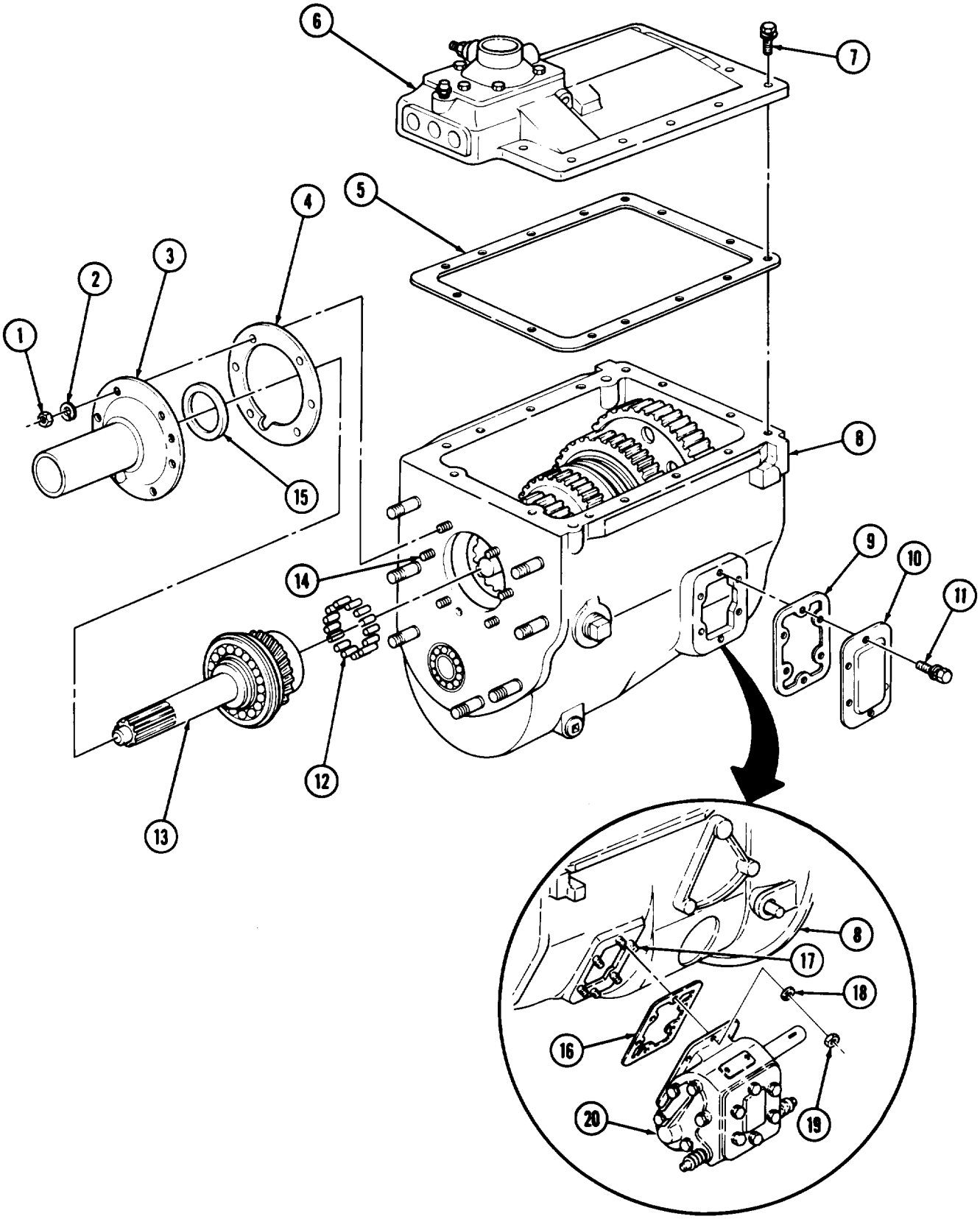

8-6. TRANSMISSION MAINTENANCE (Contd)

NOTE

Apply sealing compound to gaskets before installation.

55. Install new gasket (10), new gasket (7), and bell housing (6) on transmission (8) with seven new lockwashers (4) and nuts (3).
56. Install new seal (11) and plug (30) in bell housing (6).
57. Position clutch release shaft (14) in bell housing (6).
58. Position clutch release yoke (25) on clutch release shaft (14).
59. Install two spacers (22), new lockwashers (23), and screws (24) on clutch release yoke (25).
60. Install bearing (26) on clutch release sleeve (28).
61. Install clutch release sleeve (28) over input shaft (9) and on clutch release yoke (25) with two spring clips (5), pads (29), four new lockwashers (2), and screws (1).
62. Install new gasket (21) and inspection cover (19) on bell housing (6) with six new screw-assembled lockwashers (20).
63. Install two elbows (12) on bell housing (6).
64. Install two grease cups (13) on two elbows (12).
65. Install grease fitting (27) on clutch release sleeve (28).
66. Install new woodruff key (18) and lever (15) on clutch release shaft (14) with screw (16) and new locknut (17).

8-6. TRANSMISSION MAINTENANCE (Contd)

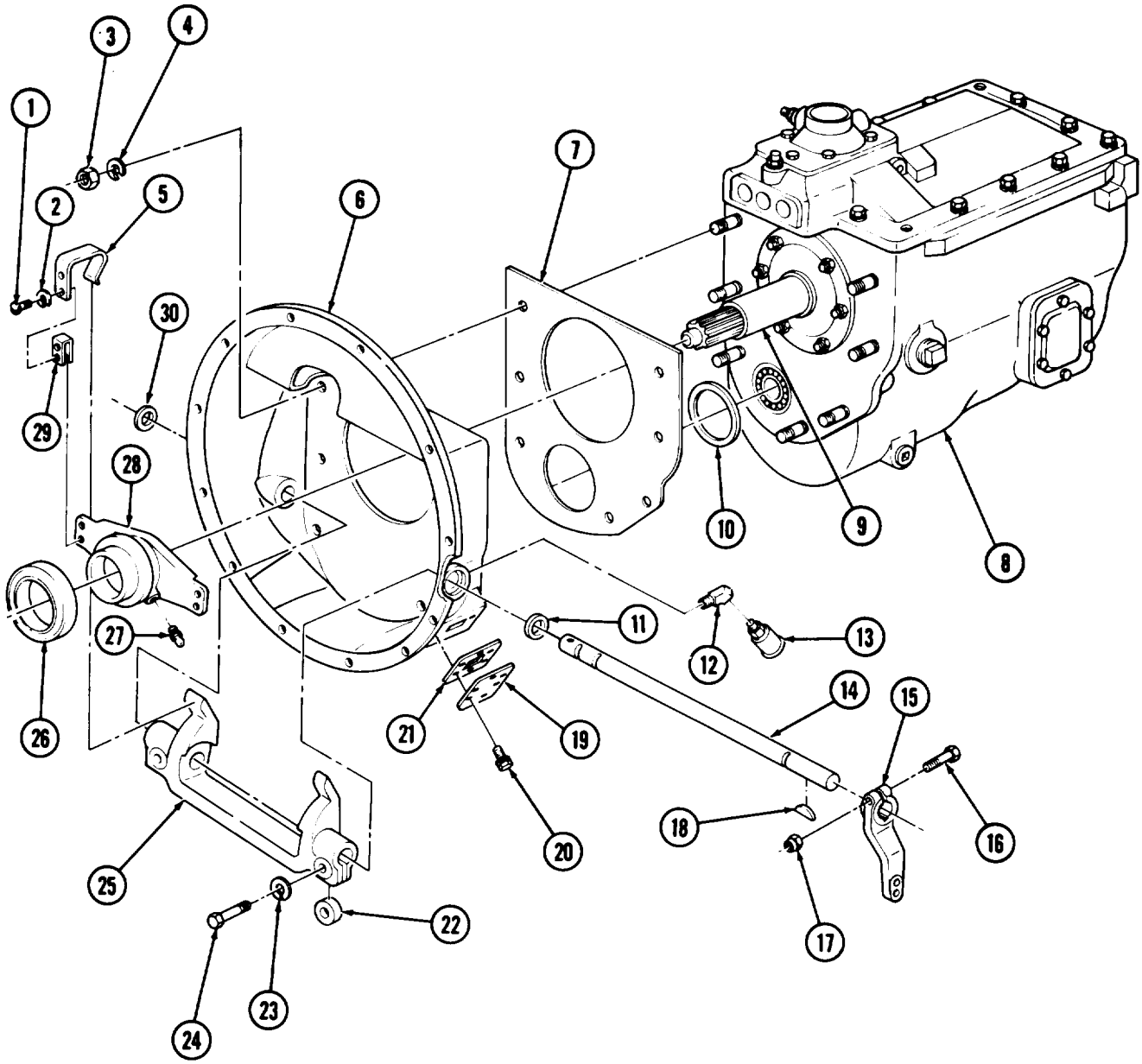

FOLLOW-ON TASKS:
- Install transmission (para. 8-4).
- Fill transmission to proper level (LO 9-2320-260-12).

8-7. TRANSMISSION SHIFTER HOUSING MAINTENANCE

THIS TASK COVERS:

a. Removal
b. Disassembly
c. Assembly
d Installation

INITIAL SETUP

APPLICABLE MODELS
All

TOOLS
General mechanic's tool kit
(Appendix B, Item 1)

MATERIALS/PARTS
Gasket (Appendix D, Item 133)
Twelve screw-assembled lockwashers (M816)
(Appendix D, Item 385)
Two lockwashers (M816)
(Appendix D, Item 217)
Two lockwashers (M816)
(Appendix D, Item 229)
Fourteen screw-assembled lockwashers
(all vehicles except M816)
(Appendix D, Item 385)

MATERIALS/PARTS (Contd
Six lockwashers (Appendix D, Item 217)
Gasket (Appendix D, Item 138)
Lockwasher (Appendix D, Item 237)
Five setscrews (Appendix D, Item 487)
Three expansion plugs (Appendix D, Item 323)

REFERENCES (TM)
TM 9-2320-260-20
TM 9-2320-260-34P-1

EQUIPMENT CONDITION
- Cab and rear tunnels removed (TM 9-2320-260-20).
- Twin poppet valve removed (para. 8-2).
- Transmission gearshift lever removed (para. 8-3).

a. Removal

NOTE

Perform steps 1 and 2 for M816 vehicles. Perform step 3 for all vehicles except M816.

1. Remove two nuts (4), lockwashers (5), screws (1), lockwashers (2), and rotochamber bracket (3) from rotochamber (6) and shifter housing (7). Discard lockwashers (5) and (2).
2. Remove twelve screw-assembled lockwashers (9) from shifter housing (7). Discard screw-assembled lockwashers (9).
3. Remove fourteen screw-assembled lockwashers (9) from shifter housing (7). Discard screw-assembled lockwashers (9).
4. Insert gearshift lever (8) in shifter housing (7) and push to one side to free shifter housing (7) from transmission housing (10).
5. Remove gearshift lever (8) from shifter housing (7).
6. Remove shifter housing (7) and gasket (11) from transmission housing (10). Discard gasket (11).

b. Disassembly

1. Remove retainer (21), spring (20), and finger plunger (19) from shifter housing (7).
2. Remove six screws (13), lockwashers (12), shifter housing cover (25), and gasket (18) from shifter housing (7). Discard lockwashers (12) and gasket (18).
3. Remove nut (15), lockwasher (14), screw (24), and shift finger (17) from shifter housing cover (25). Discard lockwasher (14).
4. Remove plunger (16) from shift finger (17).
5. Remove three compression springs (23) and poppet balls (22) from shifter housing (7).

8-7. TRANSMISSION SHIFTER HOUSING MAINTENANCE (Contd)

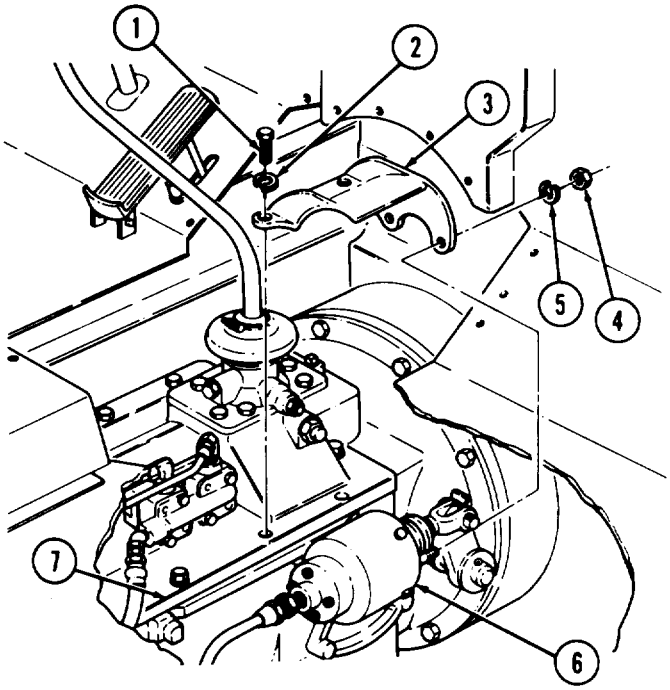

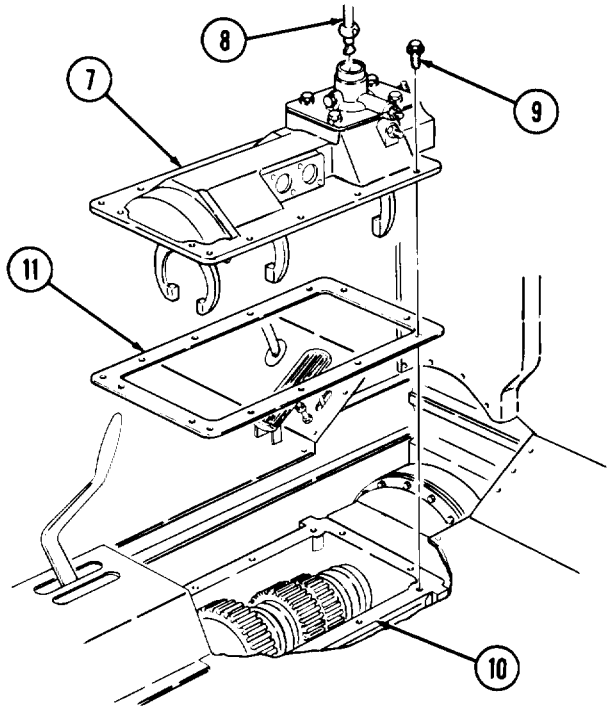

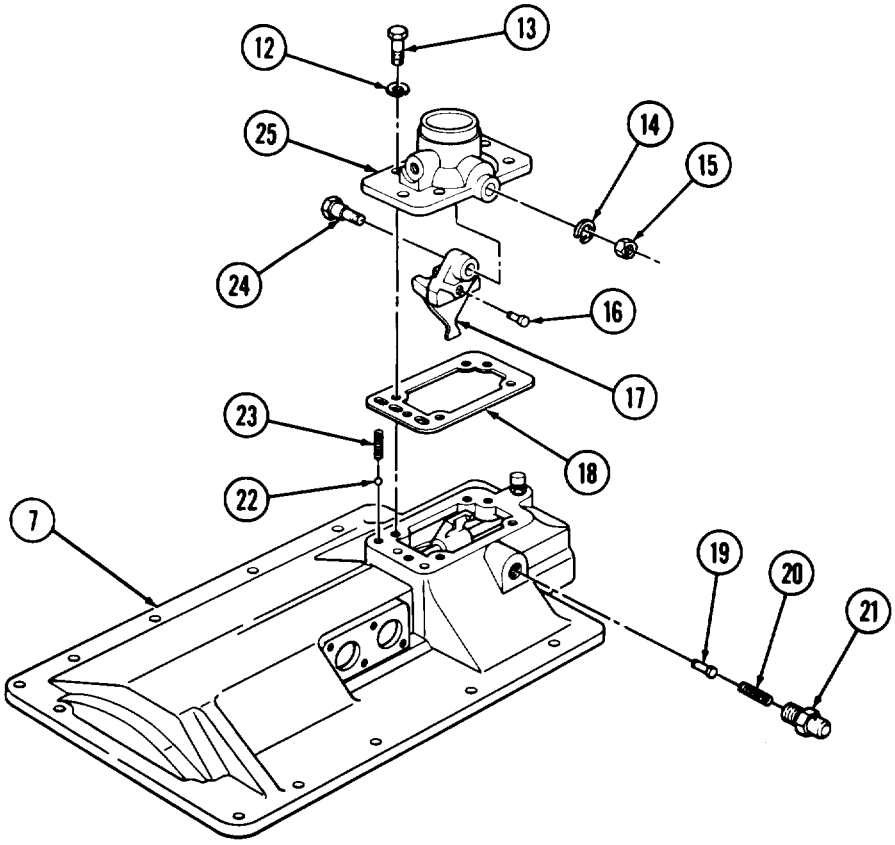

8-7. TRANSMISSION SHIFTER HOUSING MAINTENANCE (Contd)

6. Remove five setscrews (2) from shifter forks (1), (3), and (14), and shift pins (4) and (11). Discard setscrews (2).
7. Remove expansion plug (6), shifter shaft (5), first gear shifter fork (1), and shift pin (4) from shifter housing (13). Discard expansion plug (6).
8. Remove expansion plug (8), shifter shaft (7), second/third gear shifter fork (14), and shift pin (11) from shifter housing (13). Discard expansion plug (8).
9. Remove expansion plug (9), shifter shaft (10), and fourth/fifth gear shifter fork (3) from shifter housing (13). Discard expansion plug (9).
10. Remove three interlock pins (12) from shifter housing (13).

c. Assembly

1. Position three interlock pins (12) in shifter housing (13).
2. Install fourth/fifth gear shifter fork (3) and shifter shaft (10) in shifter housing (13) with new expansion plug (9).
3. Install second/third gear shifter fork (14), shift pin (11), and shifter shaft (7) in shifter housing (13) with new expansion plug (8).
4. Install first gear shifter fork (1), shift pin (4), and shifter shaft (5) in shifter housing (13) with new expansion plug (6).
5. Install five new setscrews (2) in shifter forks (1), (3), and (14), and shift pins (4) and (11).

8-7. TRANSMISSION SHIFTER HOUSING MAINTENANCE (Contd)

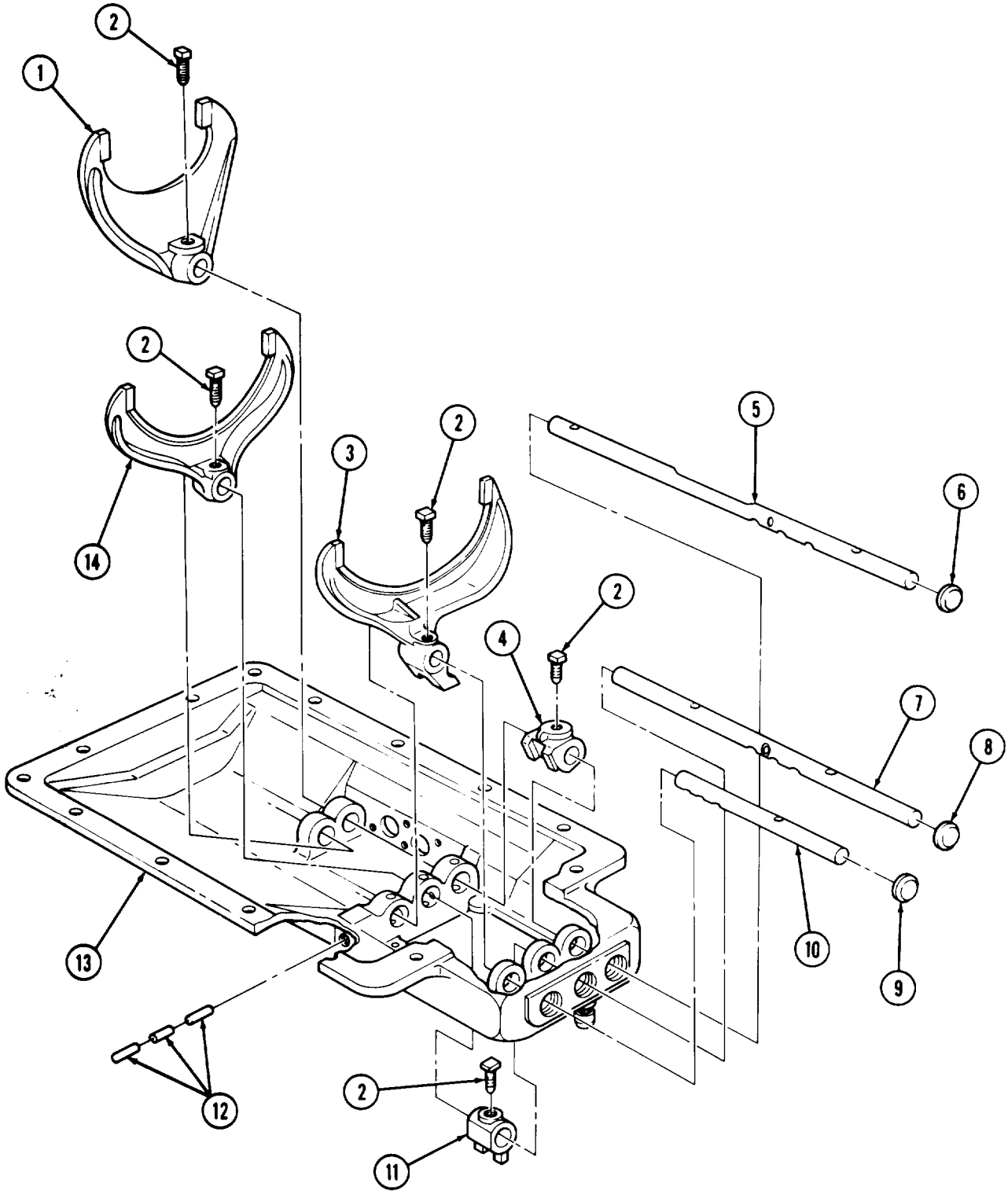

8-7. TRANSMISSION SHIFTER HOUSING MAINTENANCE (Contd)

6. Install three poppet balls (11) and compression springs (12) in shifter housing (10).
7. Install plunger (4) in shift finger (5).
8. Install shift finger (5) on shifter housing cover (14) with screw (13), new lockwasher (2), and nut (3).
9. Install new gasket (6) and shifter housing cover (14) on shifter housing (10) with six new lockwashers (15) and screws (1).
10. Install finger plunger (7) and spring (8) in shifter housing (10) with retainer (9).

d. Installation

NOTE

Perform steps 1 and 2 for M816 vehicles. Perform step 3 for all vehicles except M816.

1. Install new gasket (18) and shifter housing (10) on transmission housing (17) with twelve new screw-assembled lockwashers (16).
2. Install rotochamber bracket (23) on shifter housing (10) and rotochamber (24) with two new lockwashers (20), screws (19), new lockwashers (22) and nuts (21).
3. Install new gasket (18) and shifter housing (10) on transmission housing (17) with fourteen new screw-assembled lockwashers (16).

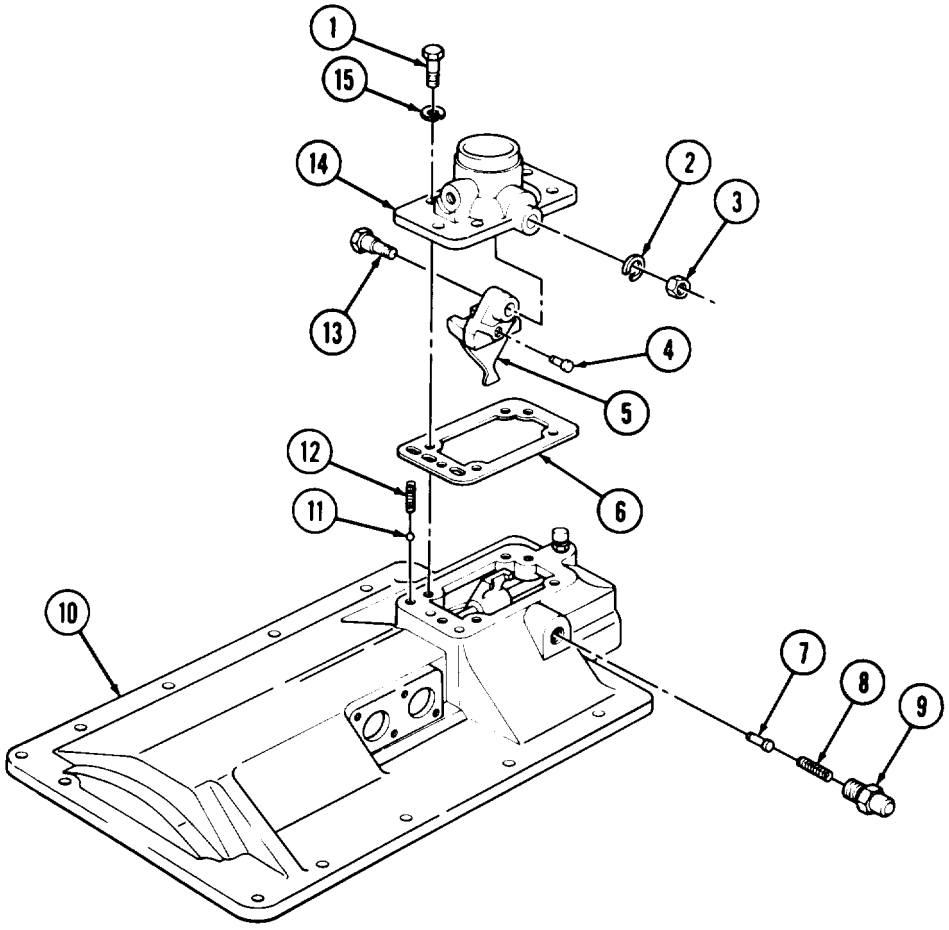

8-7. TRANSMISSION SHIFTER HOUSING MAINTENANCE (Contd)

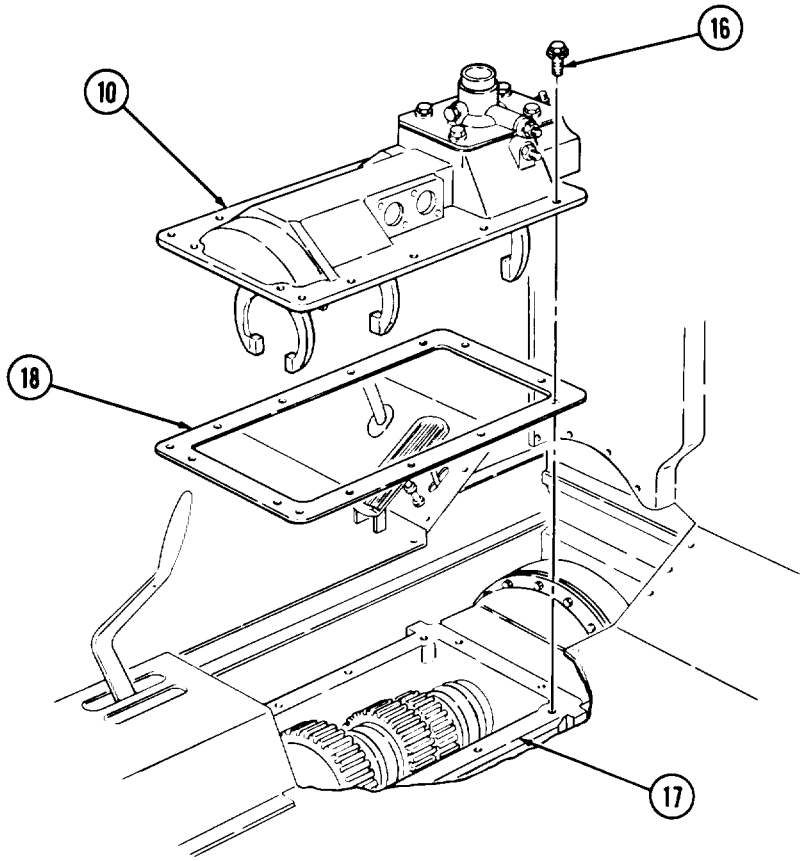

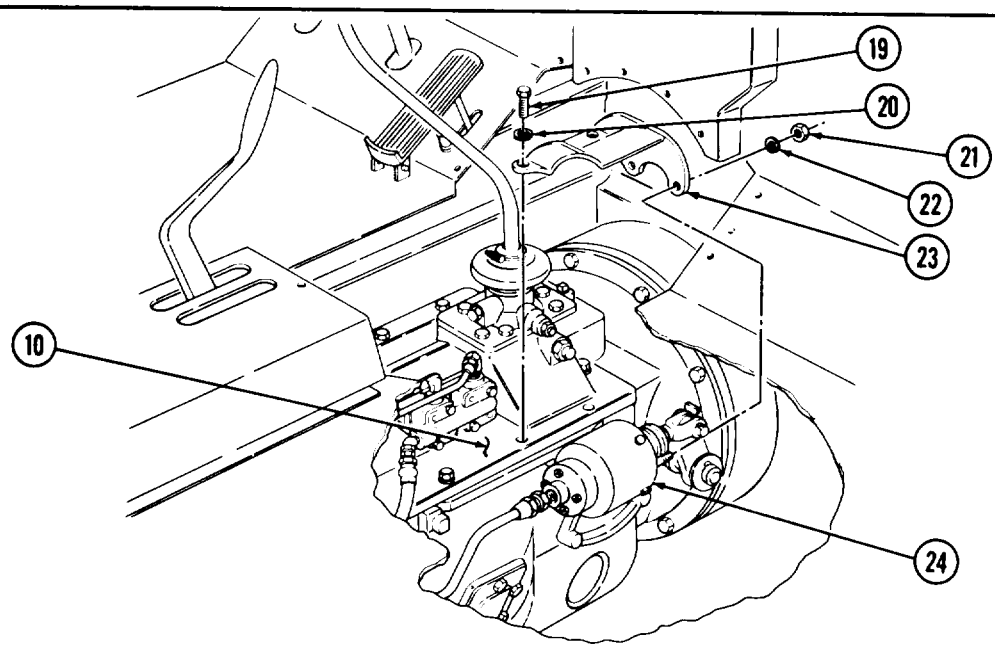

FOLLOW-ON TASKS:
- Install twin poppet valve (para. 8-2).
- Install transmission gearshift lever (para. 8-3).
- Install rear and cab tunnels (TM 9-2320-260-20).

CHAPTER 9

TRANSFER SYSTEM MAINTENANCE

9-1. TRANSFER SYSTEM MAINTENANCE INDEX

PARA. NO.	TITLE	PAGE NO.
9-2.	Front Axle Engagement Air Cylinder Maintenance	9-2
9-3.	Transfer Replacement	9-6
9-4.	Transfer Repair	9-12

9-2. FRONT AXLE ENGAGEMENT AIR CYLINDER MAINTENANCE

THIS TASK COVERS:

a. Removal
b. Disassembly
c. Cleaning and Inspection
d. Assembly
e. Installation

INITIAL SETUP

APPLICABLE MODELS
All

TOOLS
General mechanic's tool kit (Appendix B, Item 1)
Torque wrench, 3/8-in. dr. (Appendix B, Item 4)

MATERIAIS/PARTS
Four tab lockwashers (Appendix D, Item 523)
Two seals (Appendix D, Item 432)
Two gaskets (Appendix D, Item 140)

MATERIALS/PARTS (Contd)
Locknut (Appendix D, Item 174)
Lubricating oil (Appendix C, Item 21)
Sealing compound (Appendix C, Item 43)
Antiseize tape (Appendix C, Item 50)

REFERENCES (TM)
TM 9-2320-260-10
TM 9-2320-260-34P-1

EQUIPMENT CONDITION
Air tanks drained (TM 9-2320-260-10).

a. Removal

1. Remove air line (6) and adapter (5) from cover (3).
2. Bend tabs on four tab lock washers (2) away from heads of screws (1) and cover (3) and remove four screws (1), tab lockwashers (2), cover (3), and gasket (7) from air cylinder (4). Discard tab lockwashers (2) and gasket (7).
3. Remove locknut (8) from front end of shifter shaft (11). Discard locknut (8).
4. Remove air cylinder (4), piston (9), and gasket (10) from shifter shaft (11) and front output shaft cover (12). Discard gasket (10).

b. Disassembly

1. Remove piston (9) from air cylinder (4).
2. Remove two retainer rings (13), retainers (14), springs (15), and washers (17) from piston (9).
3. Remove two seals (16) from piston (9). Discard seals (16).

c. Cleaning and Inspection

1. For general cleaning instructions, refer to para. 2-8.
2. For general inspection instructions, refer to para. 2-9.
3. Inspect springs (15) for bent, broken, or deformed coils. Replace both springs (15) if one or both is damaged or mismatched.
4. Inspect air cylinder (4) for bends, cracks, dents, and internal surface scoring. Minor scoring is acceptable. Replace air cylinder (4) if dented, bent, cracked, or severely scored.
5. Inspect piston (9) for cracks, burrs, dents, and damaged seal and retainer grooves. Replace piston (9) if cracked, burred, dented, or grooves are damaged.
6. Inspect retainers (14) for bends and distortion. Replace retainer (14) if bent or distorted.
7. Inspect cover (3) for cracks and damaged threads. Replace cover (3) if cracked or threads are damaged.

9-2. FRONT AXLE ENGAGEMENT AIR CYLINDER MAINTENANCE (Contd)

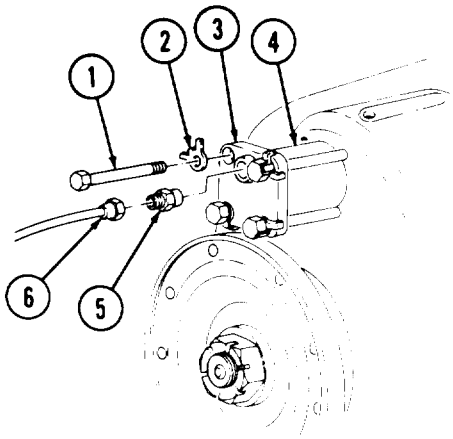

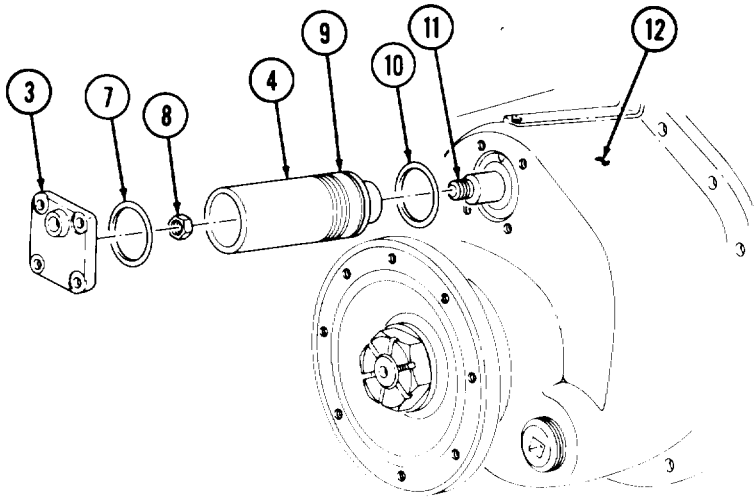

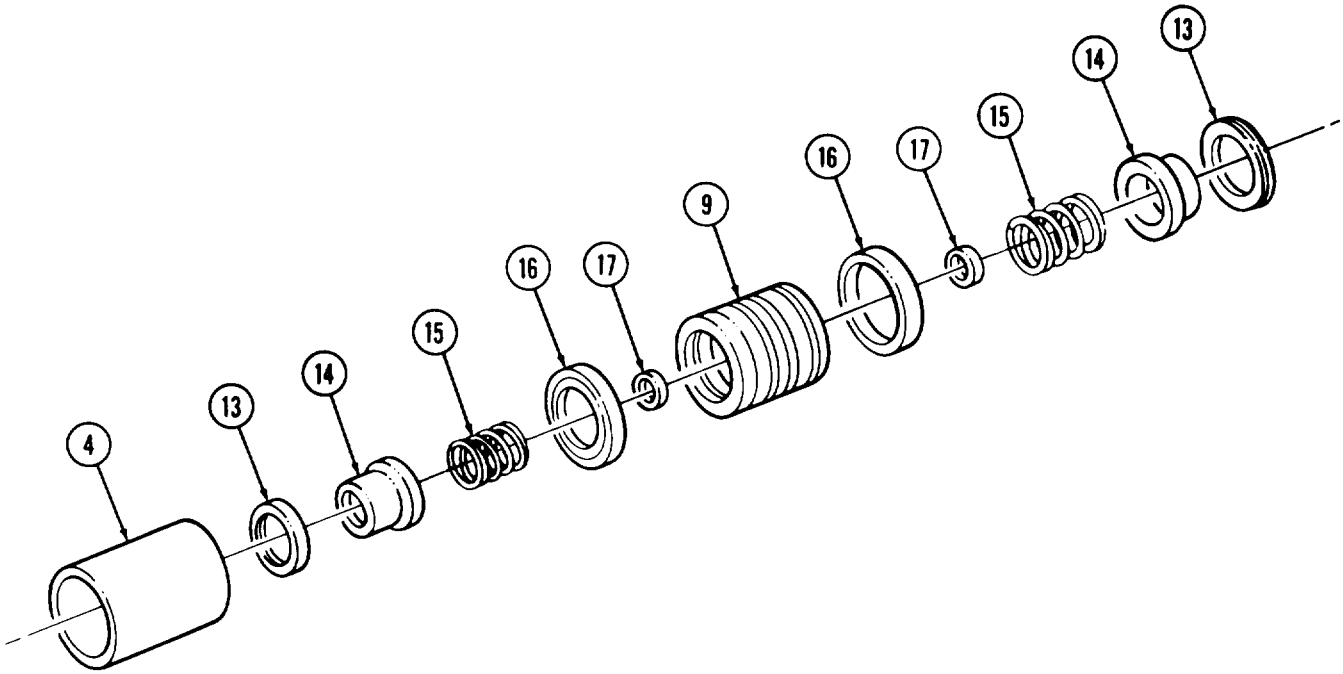

9-2. FRONT AXLE ENGAGEMENT AIR CYLINDER MAINTENANCE (Contd)

d. Assembly

1. Place washer (6), spring (4), and retainer (3) in end of piston (7) and install with retaining ring (2). Ensure retaining ring (2) seats in groove (8) of piston (7).
2. Repeat step 1 for other end of piston (7).
3. Install two new seals (5) in grooves (9) of piston (7), with lips of seals (5) toward ends of piston (7).
4. Lightly oil seals (5) on piston (7) and install piston (7) on air cylinder (1). Ensure lips of seals (5) lie flat on air cylinder (1).

e. Installation

1. Apply a light coat of sealing compound to new gaskets (11) and (12) and position gaskets (11) and (12) on ends of air cylinder (1).
2. Position shifter shaft (13) in neutral (center) position and install air cylinder (1) and piston (7) on shifter shaft (13) and front output shaft cover (14) with new locknut (10). Ensure gasket (12) is correctly positioned between air cylinder (1) and front output shaft cover (14).
3. Ensure gasket (11) is alined on air cylinder (1) and install cover (17) on end of air cylinder (1) with four new tab lockwashers (16) and screws (15). Finger tighten screws (15).
4. Bend long tabs (20) of tab lockwashers (16) over comers of cover (17) to hold tab washers (16) in place.
5. Tighten screws (15) 6-10 lb-ft (8-14 N•m) following tightening sequence shown.
6. Bend short tab (21) of tab lockwashers (16) over heads of screws (15). Loosen screws (15) slightly if necessary to aline hex flat of screws (15) with tab of tab lockwashers (16).
7. Wrap male pipe threads with anti seize tape and install adapter (18) and air line (19) on cover (17).

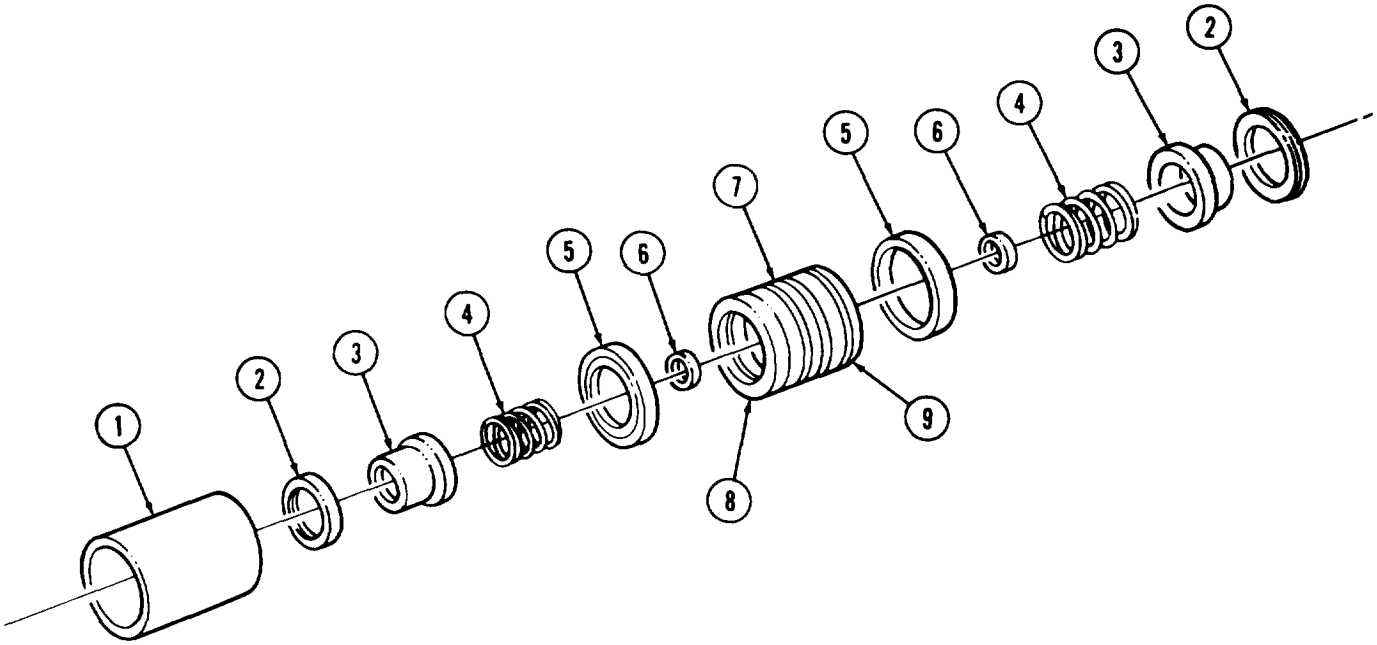

9-2. FRONT AXLE ENGAGEMENT AIR CYLINDER MAINTENANCE (Contd)

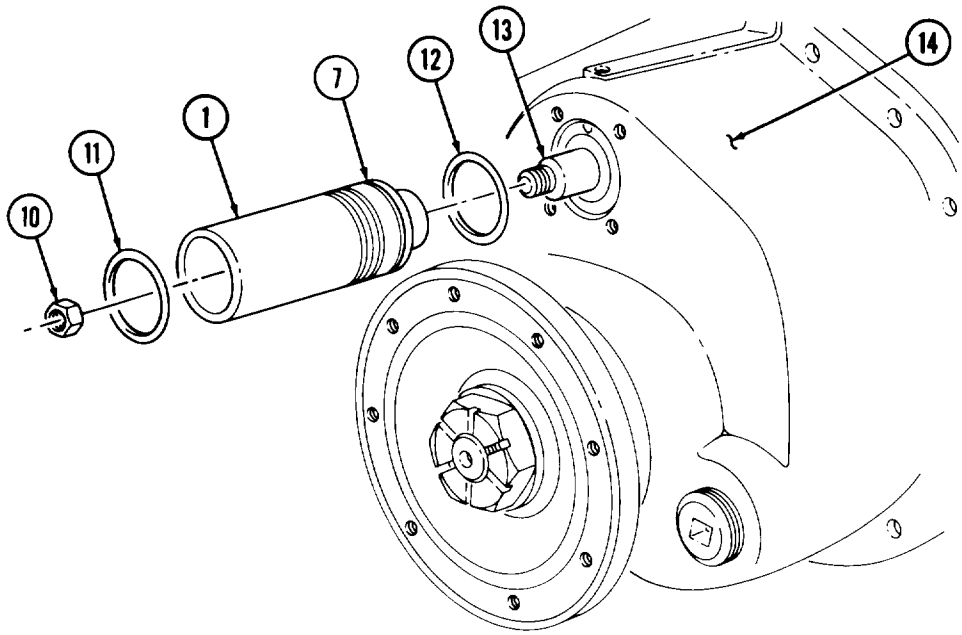

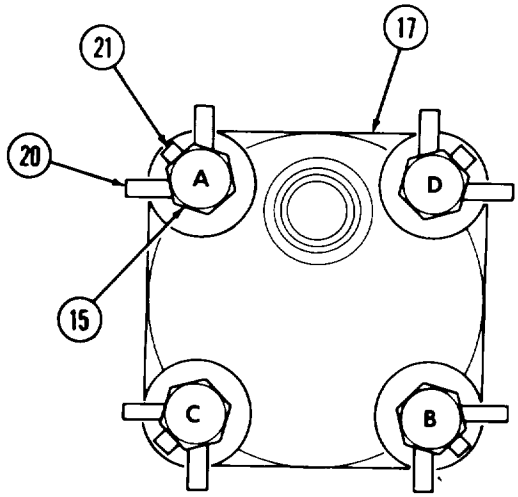

TIGHTENING SEQUENCE

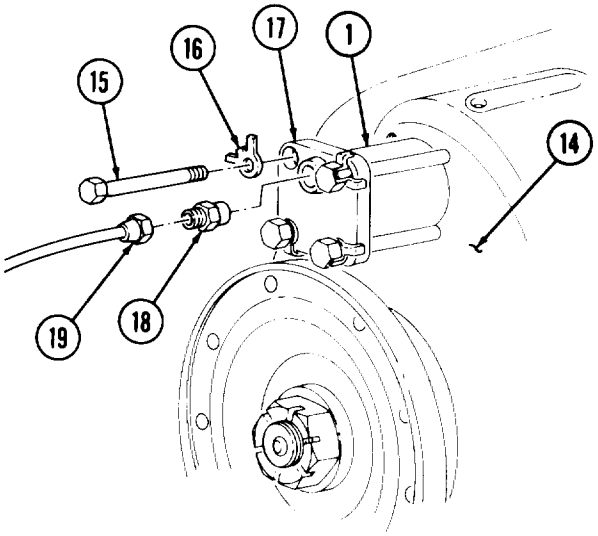

FOLLOW-ON TASKS: • Start engine and build air pressure (TM 9-2320-260-10).
• Test air cylinder for operation and air leaks (TM 9-2320-260-10).

9-3. TRANSFER REPLACEMENT

THIS TASK COVERS:

a. Removal **b. Installation**

INITIAL SETUP

APPLICABLE MODELS

All

TOOLS

General mechanic's tool kit (Appendix B, Item 1)
Transmission jack
Torque wrench, 1/2-in. dr. (Appendix B, Item 3)

MATERIALS/PARTS

Locknut (Appendix D, Item 178)
Three locknuts (Appendix D, Item 183)
Nine lockwashers (Appendix D, Item 219)
Two cotter pins (Appendix D, Item 21)
Six-insulators (Appendix D, Item 161)
Twine (Appendix C, Item 54)

PERSONNEL REQUIRED

Two

REFERENCES (TM)

LO 9-2320-260-12
TM 9-2320-260-10
TM 9-2320-260-20
TM 9-2320-260-34P-1

EQUIPMENT CONDITION

- Wheels chocked (TM 9-2320-260-10).
- Transfer case drained (LO 9-2320-260-12).
- Spare wheel removed (TM 9-2320-260-10).
- Cab tunnel covers removed (TM 9-2320-260-20).
- Front axle propeller shaft removed (TM 9-2320-260-20).
- Transmission-to-transfer propeller shaft removed (TM 9-2320-260-20).
- Forward-rear axle propeller shaft removed (TM 9-2320-260-20).
- PTO propeller shaft removed (all models with transfer PTO) (TM 9-2320-260-20).
- Drain air tanks (TM 9-2320-260-10).

GENERAL SAFETY INSTRUCTIONS

- Transfer is heavy and bulky. Allow adequate clearance to rem-eve transfer from vehicle.
- Ensure transfer is securely mounted to jack with safety chain or strap.
- Use prybar to free transfer from hang-ups or snags.
- Do not disconnect air lines before draining air reservoirs.

a. Removal

1. Remove spring (10) from hole (7) in parking brake lever (6) and bracket (9).

NOTE

- Mark threaded end of parking brake cable for installation.
- Tag air lines for installation.

2. Remove locknut (8) from parking brake cable (4) and remove threaded end (5) from parking brake lever (6). Discard locknut (8).
3. Remove two nuts (12), lockwashers (11), screws (3), clamp (2), and parking brake cable (4) from bracket (1). Discard lockwashers (11). Tie parking brake cable (4) out of way.

WARNING

Do not disconnect air lines before draining air reservoirs. Small parts under pressure may shoot out with high velocity, causing injury to personnel.

4. Disconnect air lines (16) and (22) from adapters (19) and (21) on front output shaft cover (23). Tie air lines (16) and (22) out of way.
5. Disconnect speedometer cable (20) from 90° drive angle (24) and tie speedometer cable (20) out of way.

9-3. TRANSFER REPLACEMENT (Contd)

6. Remove cotter pin (18), clevis pin (14), and yoke rod (17) from shifter shaft (13) and tie yoke rod (17) back to rod arm (15). Discard cotter pin (18).

NOTE

Perform step 7 for M815 and M819 vehicles.

7. Remove cotter pin (25), clevis pin (27), and yoke (26) from PTO lever (28). Tie yoke (26) out of way. Discard cotter pin (25).

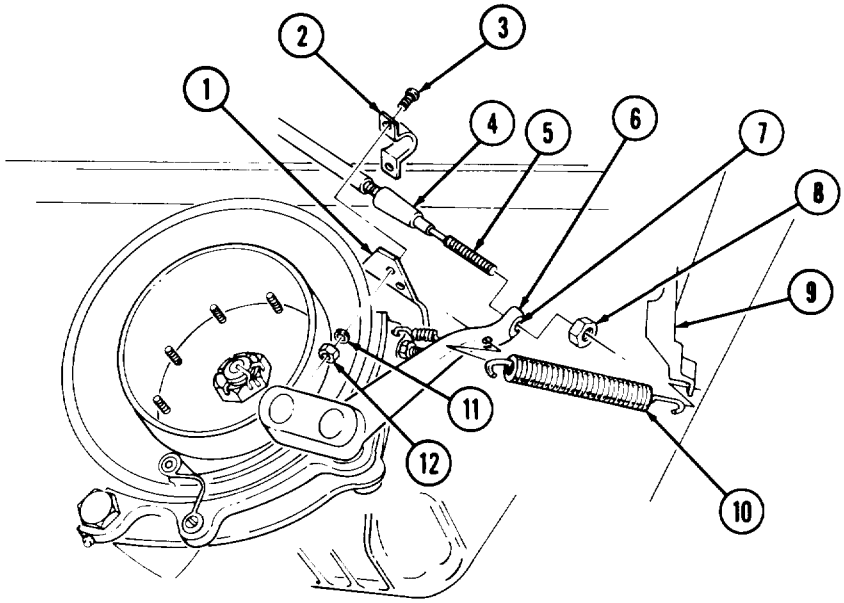

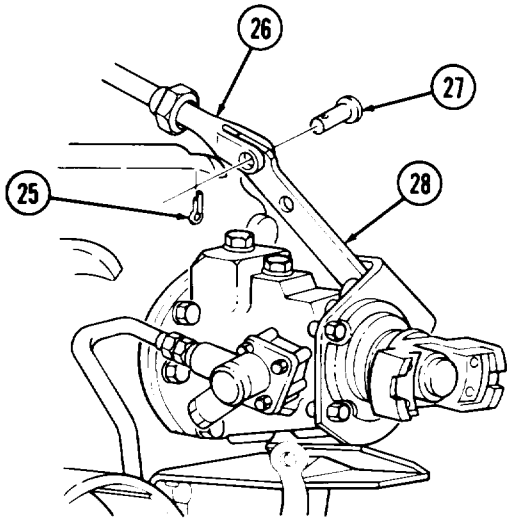

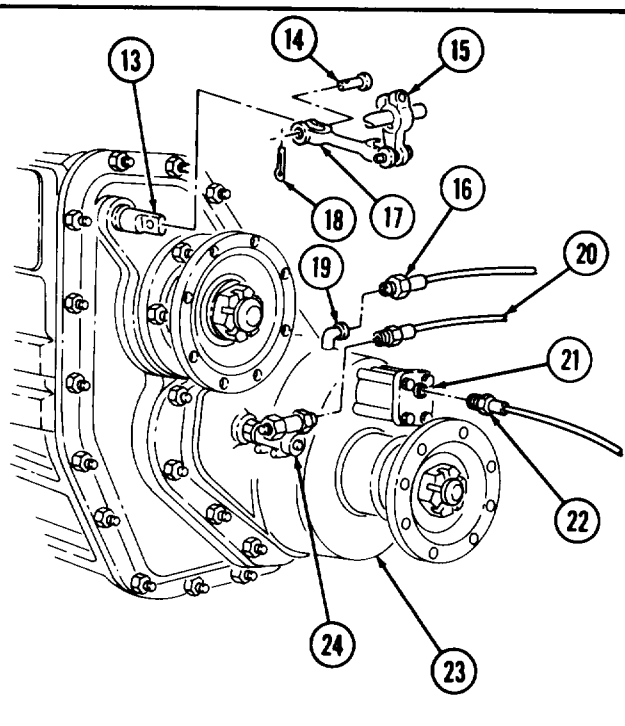

9-3. TRANSFER REPLACEMENT (Contd)

WARNING

- Use prybar to free transfer from hang-ups or snags. Failure to do so may result in injury to personnel.
- Ensure transfer is securely mounted to jack with safety chain or strap. Failure to do so may result in injury to personnel.
- Transfer is heavy and bulky. Allow adequate clearance to remove transfer from vehicle. Failure to do so may result in injury or death to personnel.

NOTE

Assistant will help with steps 8 through 12.

8. Position transmission jack with transfer lift under transfer (6) and raise until transfer (6) weight is on transmission jack. Secure transfer (6) to transmission jack with safety chain or strap.
9. Remove three screws (4), lockwashers (5), four screws (8), and lockwashers (7) from two brackets (2) and transfer (6). Discard lockwashers (5) and (7).
10. Lower transmission jack and turn right side of transfer (6) toward rear of vehicle.
11. Remove transmission jack and transfer (6) from under vehicle.
12. Remove three locknuts (12), screws (10), washers (9), six insulators (11), and two brackets (2) from frame rails (1) and (3). Discard locknuts (12) and insulators (11).

b. Installation

1. Install two brackets (2) and six new insulators (11) on frame rails (1) and (3) and brackets (13) with three screws (10), washers (9), and new locknuts (12). Tighten locknuts (12) until distance from top of washer (9) to bracket (13) is 1.94 in. (49.3 mm) as shown.

WARNING

- Ensure transfer is securely mounted to jack with safety chain or strap. Failure to do so may result in injury to personnel.
- Transfer is heavy and bulky. Allow adequate clearance to remove transfer from vehicle. Failure to do so may result in injury or death to personnel.

NOTE

Assistant will help with steps 2 through 6.

2. Mount transfer (6) on transmission jack with transfer lift. Secure transfer (6) to transmission jack with safety chain or strap.
3. With right side of transfer (6) toward rear of vehicle, move transmission jack and transfer (6) under vehicle from left side.
4. When transmission jack and transfer (6) are in position, turn transmission jack and transfer (6) 90° to the left.
5. Raise transfer (6) to aline mounting pads to brackets (2).
6. Install transfer (6) on two mounting brackets (2) with three new lockwashers (5), screws (4), four new lockwashers (7), and screws (8). Tighten screws (4) and (8) 125-135 lb-ft (170-183 N•m).

9-3. TRANSFER REPLACEMENT (Contd)

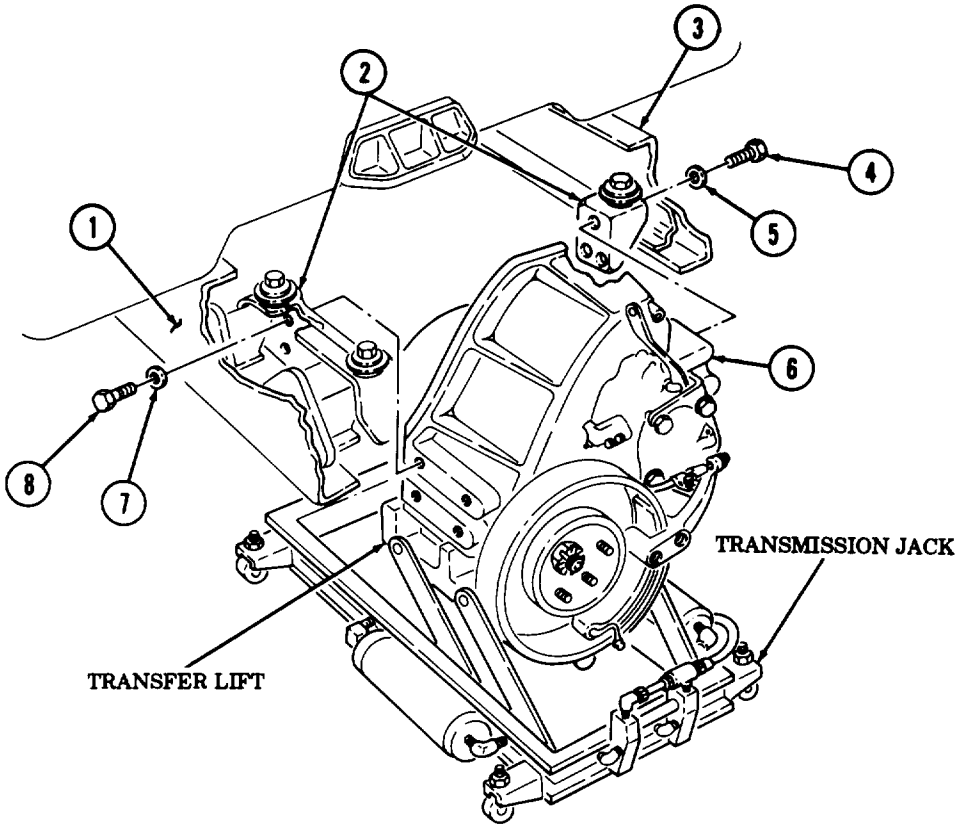

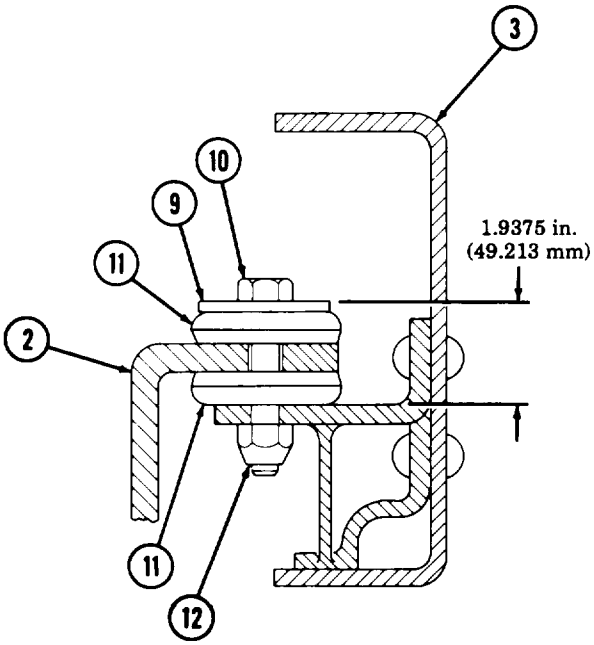

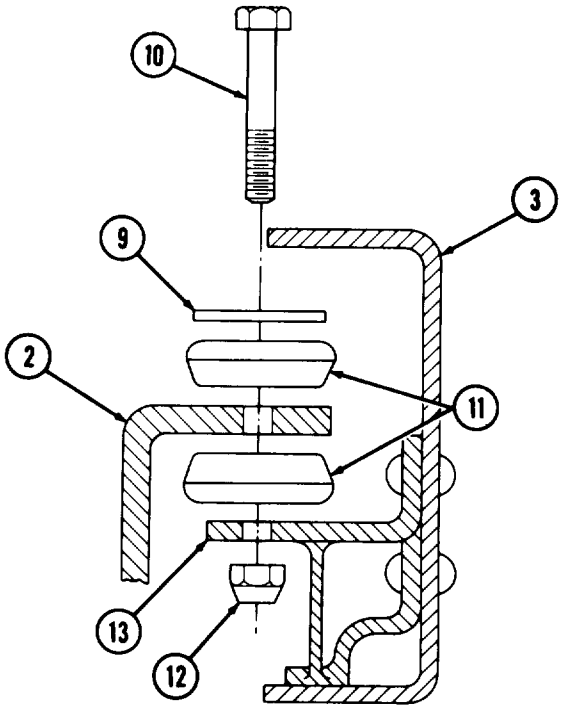

9-3. TRANSFER REPLACEMENT (Contd)

7. Install yoke rod (5) with rod arm (3) on transfer shifter shaft (1) with clevis pin (2) and new cotter pin (6).
8. Connect speedometer cable (8) to 90° drive angle (12).
9. Connect air line (4) to adapter fitting (7) on top of front output shaft cover (11).
10. Connect air line (10) to adapter (9).

NOTE

Perform step 11 for M815 and M819 vehicles.

11. Connect shifter rod yoke (14) to PTO lever (16) with clevis pin (15) and new cotter pin (13).
12. Slide threaded end (21) of parking brake cable (20) through eye of parking brake lever (22) and install new locknut (24) to marked point on threaded end (21) of parking brake cable (20).
13. Install spring (26) on bracket (25) and hole (23) in parking brake lever (22).
14. Install parking brake cable (20) on bracket (17) with clamp (18), two screws (19), new lock-washers (27), and nuts (28).

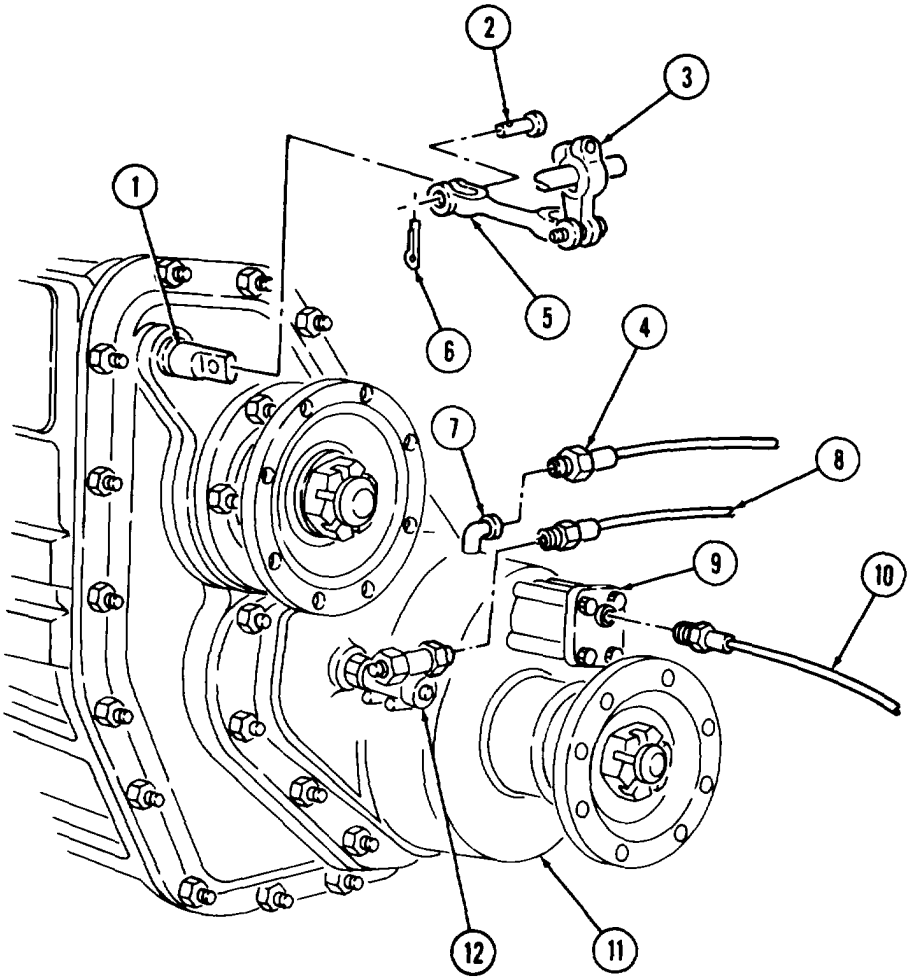

9-3. TRANSFER REPLACEMENT (Contd)

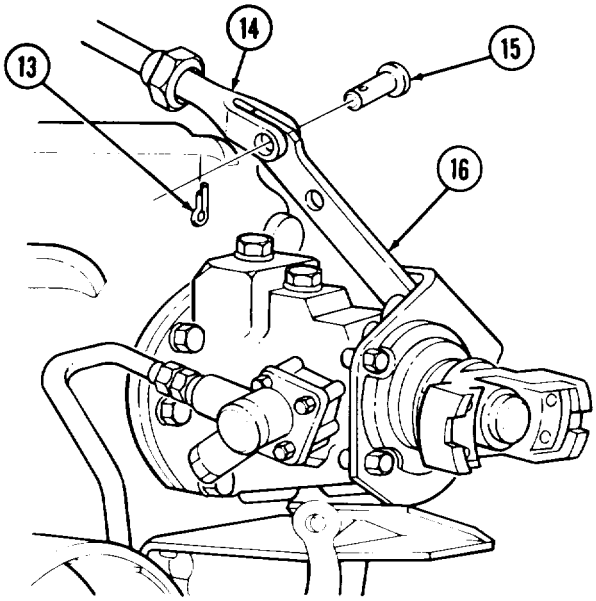

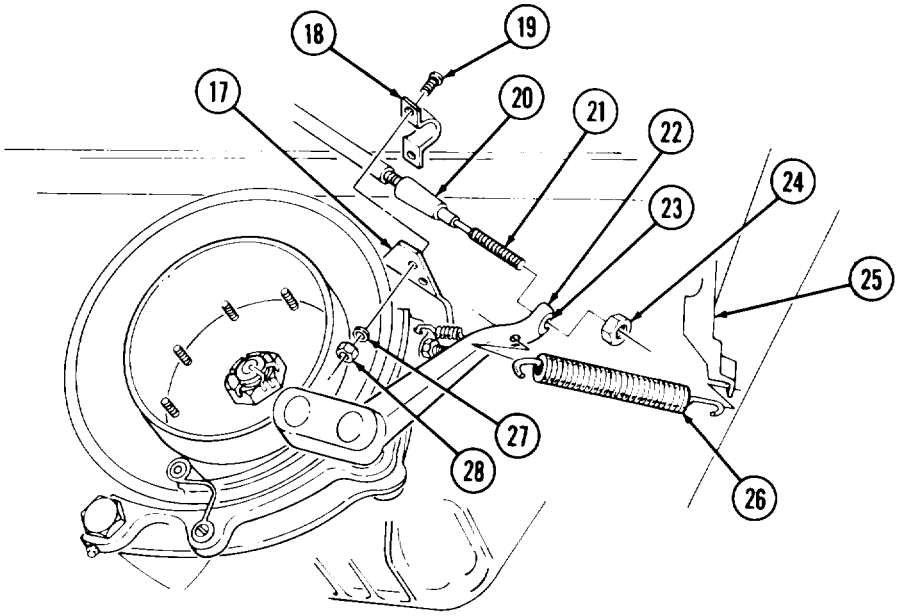

FOLLOW-ON TASKS:
- Install PTO propeller shaft (if removed) (TM 9-2320-260-20).
- Install forward-rear propeller shaft (TM 9-2320-260-20).
- Install transmission-to-transfer propeller shaft (TM 9-2320-260-20).
- Install front axle propeller shaft (TM 9-2320-260-20).
- Check operation of PTO shift linkage and adjust as necessary (TM 9-2320-260-20).
- Check operation of transfer shift linkage and adjust as necessary (TM 9-2320-260-20).
- Install spare wheel (TM 9-2320-260-10).
- Fill transfer to proper level (LO 9-2320-260-12).
- Adjust parking brake cable (TM 9-2320-260-20).
- Start engine, build air pressure, and check for leaks (TM 9-2320-260-10).
- Install cab tunnel covers (TM 9-2320-260-20).
- Test drive vehicle (TM 9-2320-260-10).

9-4. TRANSFER REPAIR

THIS TASK COVERS:

a. Disassembly
b. Cleaning and Inspection
c. Repair
d. Assembly

INITIAL SETUP

APPLICABLE MODELS
All

SPECIAL TOOLS
Universal puller kit (Appendix B, Item 75)

TOOLS
General mechanic's tool kit (Appendix B, Item 1)
Transmission maintenance stand (Appendix B, Item 110)
Dial indicator (Appendix B, Item 11)
Torque wrench, 1.12-in. dr. (Appendix B, Item 3)
Torque wrench, 3/4-in. dr. (Appendix B, Item 2)
Bearing remover/replacer (Appendix B, Item 83)
Oil seal replacer (Appendix B, Item 157)
Companion flange replacer (Appendix B, Item 96)
Bearing cone adapter (Appendix B, Item 97)
Chains
2-1/8-in. socket, 1-in. dr. (Appendix B, Item 20)
Adapter, 3/4 to 1-in. dr. (Appendix B, Item 19)
Lifting device
Arbor press (Appendix B, Item 7)
Depth micrometer (Appendix B, Item 16)
Soft-head hammer (Appendix B, Item 47)
Feeler gage (Appendix B, Item 58)
Adjusting fixture (Appendix E, Figure E-3)
Adjusting fixture (Appendix E, Figure E-5)

MATERIALS/PARTS
Two locktab washers (Appendix D, Item 208)
Four woodruff keys (Appendix D, Item 547)
Two sleeves (PTO models) (Appendix D, Item 510)
Three cotter pins (Appendix D, Item 25)
Shim (Appendix D, Item 505)
Shim (Appendix D, Item 506)

MATERIALS/PARTS (Contd)
Two gaskets (Appendix D, Item 140)
Gasket (Appendix D, Item 141)
Gasket (Appendix D, Item 142)
Gasket (Appendix D, Item 143)
Gasket (Appendix D, Item 144)
Gasket (Appendix D, Item 145)
Six locknuts (Appendix D, Item 180)
Locknut (Appendix D, Item 174)
Three seals (Appendix D, Item 430)
Two seals (Appendix D, Item 432)
Seal (Appendix D, Item 471)
Seal (Appendix D, Item 472)
Lockwasher (Appendix D, Item 239)
Four lockwashers (Appendix D, Item 223)
Four lockwashers (Appendix D, Item 215)
Fifty-four lockwashers (Appendix D, Item 217)
Four tab lockwashers (Appendix D, Item 523)
White carbonate pigment (Appendix C, Item 27)
Sealing compound (Appendix C, Item 43)
Sealing compound (Appendix C, Item 44)
Lubricating oil (Appendix C, Item 22)
Crocus cloth (Appendix C, Item 53)
Safety wire (Appendix C, Item 59)

PERSONNEL REQUIRED
Two

REFERENCES (TM)
TM 9-214
TM 9-2320-260-20
TM 9-2320-260-34P-1

EQUIPMENT CONDITION
- Transfer assembly removed (para. 9-3).
- Parking brakeshoes removed (TM 9-2320-260-20).

GENERAL SAFETY INSTRUCTIONS
All personnel must stand clear during lifting operations.

a. Disassembly

1. Attach lifting device to lifting bracket (2) on transfer (1).

NOTE

Steps 2 and 3 are an alternate method of connecting lifting device to transfer.

2. Remove two nuts (3), lockwashers (4), and screws (5) from transfer (1). Discard lockwashers (4).
3. Attach ends of chain to transfer(1) with two longer screws (6), four washers (7), and nuts (3) and attach chain to lifting device.

9-4. TRANSFER REPAIR (Contd)

WARNING

All personnel must stand clear during lifting operations. A swinging or shifting load may cause injury to personnel.

NOTE

Assistant will help with step 4.

4. Raise transfer (1) and install on repair stand with seven washers (9) and screws (8) through two repair stand brackets. Tighten screws (8) 80-100 lb-ft (109-136 N•m).
5. Remove lifting device from transfer (1) by unhooking from lifting bracket (2) or removing two nuts (3), screws (6), four washers (7), and chain. Install screws (5), lockwashers (4), and nuts (3) on transfer (1).
6. Record evidence of oil leaks and then clean exterior of transfer (1) (para. 2-8).

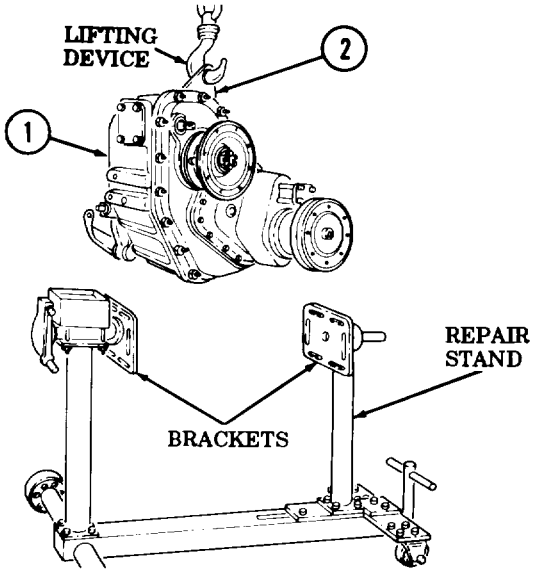

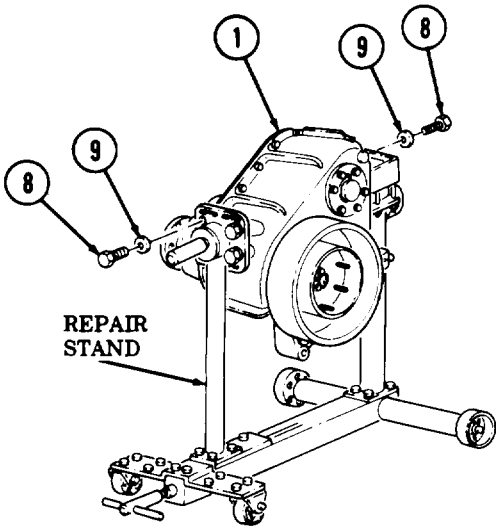

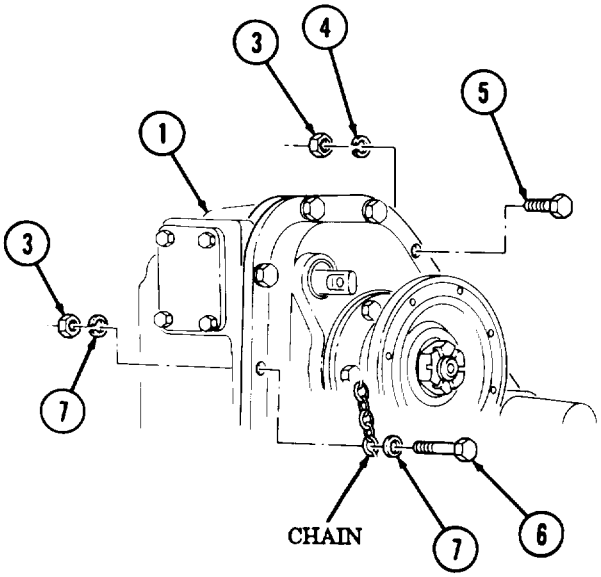

9-4. TRANSFER REPAIR (Contd)

NOTE

Perform steps 7 through 10 for M815, M816, and M819 vehicles.

7. Remove screw (10), washer (11), clamp (12), and tube (7) from transfer (1).
8. Remove tube (7) and two sleeves (6) from PTO (5) and elbow (13). Discard sleeves (6).
9. Remove elbow (13) from transfer (1).
10. Remove two nuts (9), lockwashers (8), four screws (4), lockwashers (3), PTO (5), and gasket (2) from transfer (1). Discard gasket (2) and lockwashers (3) and (8).

NOTE

Perform steps 11 and 12 for M815 and M819 vehicles.

11. Remove safety wire (16) from setscrew (15). Discard safety wire (16).
12. Remove setscrew (15) and coupling (17) from input shaft (14).

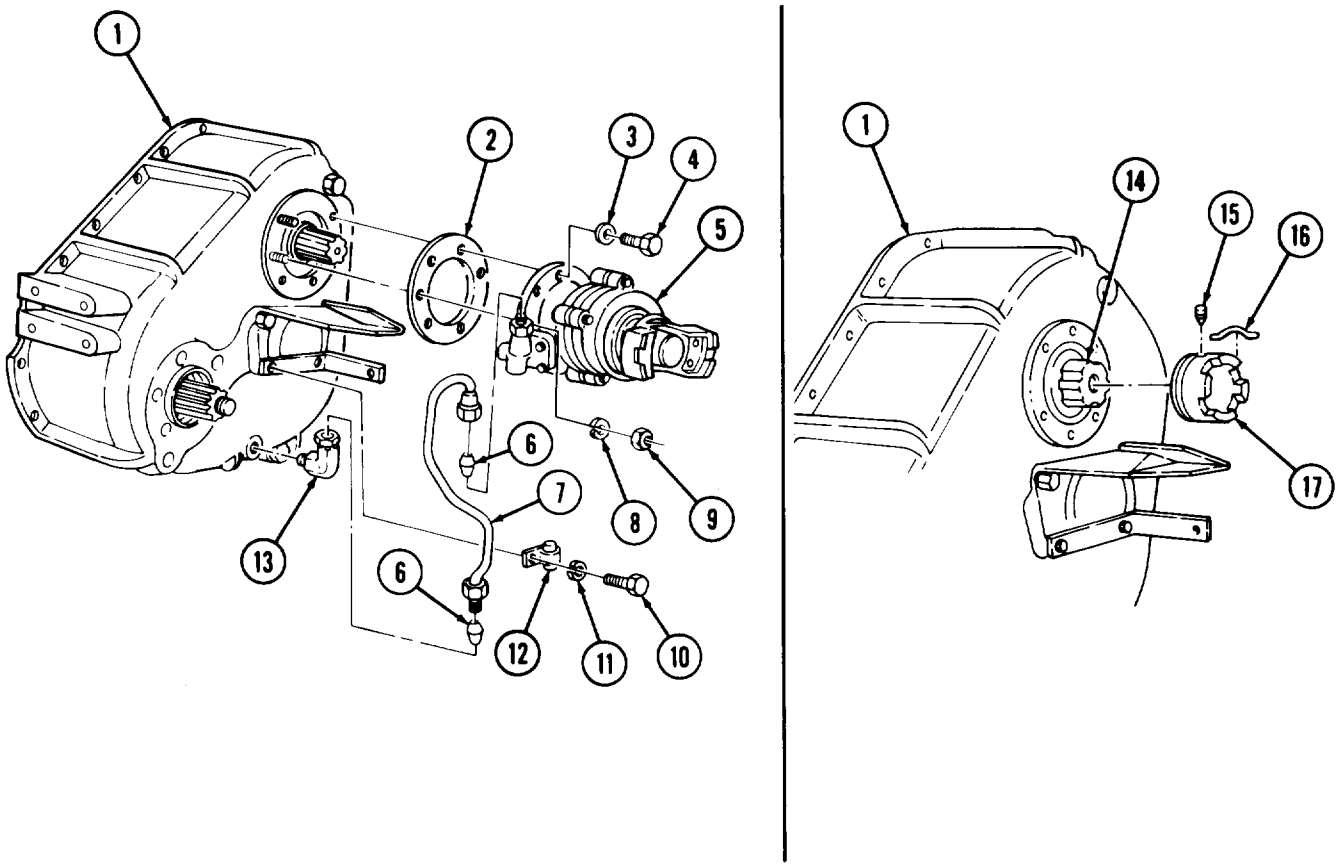

9-4. TRANSFER REPAIR (Contd)

13. Remove cotter pin (32), nut (33), and washer (34) from brakedrum (35) and rear output shaft (41). Discard cotter pin (32).
14. Using puller, remove brakedrum (35) from rear output shaft (41).
15. Remove six locknuts (45), flange (44), and shield (43) from brakedrum (35). Discard locknuts (45).

NOTE

Record thickness of shims for installation.

16. Remove six screws (36), lockwashers (37), cap (38), and shim(s) (39) from rear output shaft (41) and transfer (1). Discard lockwashers (37) and shim(s) (39).
17. Remove two screws (28), lockwashers (27), and bracket (31) from cover (25). Discard lockwashers (27).
18. Remove two screws (23), lockwashers (26), bracket (22), cover (25), and shim(s) (24) from transfer (1). Discard lockwashers (26) and shim(s) (24).
19. Remove six screws (21), lockwashers (20), cover (19), and gasket (18) from transfer (1). Discard gasket (18) and lockwashers (20).
20. Bend tabs of locktab washer (29) away from screws (30).
21. Remove two screws (30), locktab washer (29), and plate (40) from intermediate shaft (42). Discard locktab washer (29).

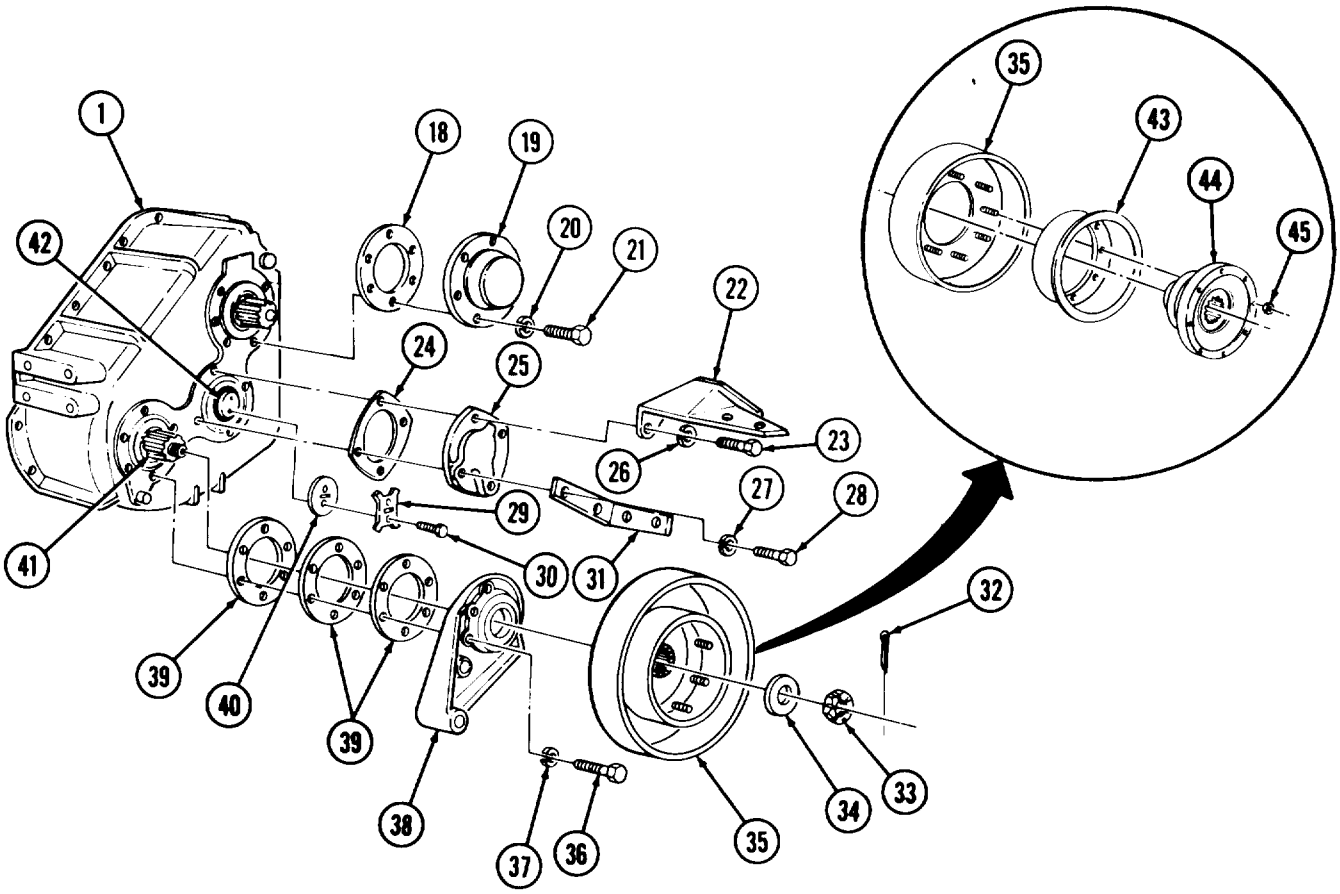

9-4. TRANSFER REPAIR (Contd)

22. Remove cotter pin (5), nut (6), and washer (4) from flange (3). Discard cotter pin (5).
23. Using puller, remove flange (3) from input shaft (2).
24. Remove 90° angle drive (13), sleeve (14), and adapter (15) from front output shaft cover (7).
25. Remove cotter pin (11), nut (12), and washer (10 from front output shaft (9). Discard cotter Pin (11).
26. Remove ten screws (17) and lockwashers (19) from front output shaft cover (7) and front cover (20). Discard lockwashers (19).
27. Install two screws (18) in threaded holes of front output shaft cover (7).

NOTE

Assistant will help with steps 28 through 30.

28. Raise transfer (1) so front output shaft cover (7) faces upward.
29. Attach chain around flange (8) and lifting device and take UP all slack in chain. Apply tension to flange (8).
30. Tighten screws (18) alternately and remove front output shaft cover (7) from front cover (20). Place front output shaft cover (7) on workbench.
31. Remove gasket (16) from front cover (20). Discard gasket (16).
32. Using puller, remove flange (8) from front output shaft (9).

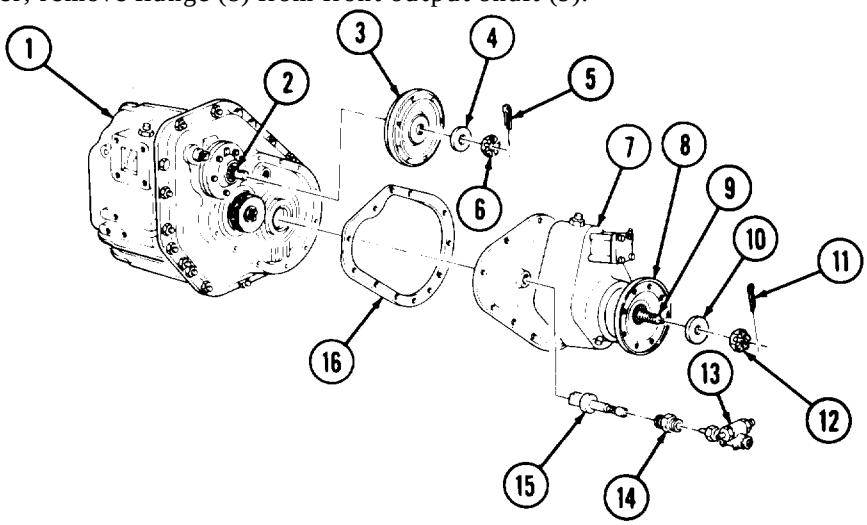

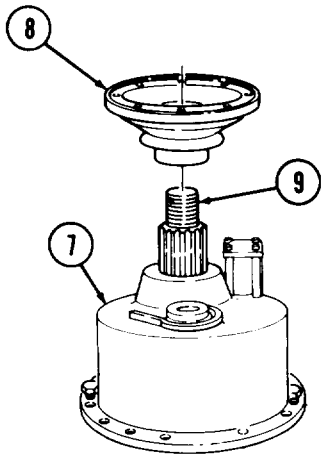

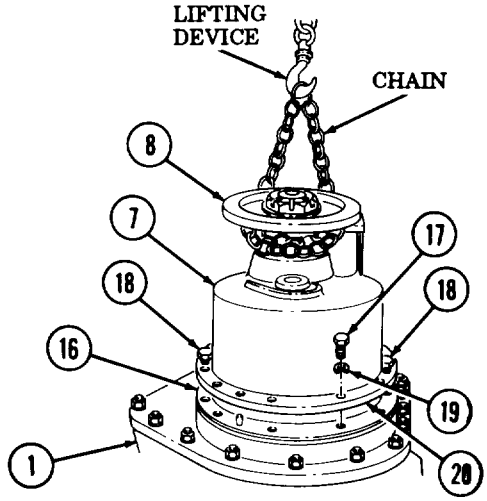

9-4. TRANSFER REPAIR (Contd)

33. Remove six, screws (27), lockwashers (28), bearing retainer (29), and gasket (30) from front cover (20) and input shaft (2). Discard lockwashers (28) and gasket (30).
34. Bend tabs of locktab washer (24) away from screws (25) and remove two screws (25), locktab washer (24), and plate (23) from intermediate shaft (21). Discard locktab washer (24).
35. Using puller, remove front drive gear (22) from intermediate shaft (21).
36. Remove snapring (26) from input shaft bearing (31).
37. Remove six nuts (32), lockwashers (33), and screws (34) from front cover (20). Discard lockwashers (33).
38. Remove screw (35) and lockwasher (36) from front cover (20). Discard lockwasher (36).
39. Remove nine nuts (38), lockwashers (39), and screws (40) from front cover (20) and housing (41). Discard lockwashers (39).
40. Install three screws (37) in threaded holes (42) and tighten screws (37) evenly to separate front cover (20) and housing (41).

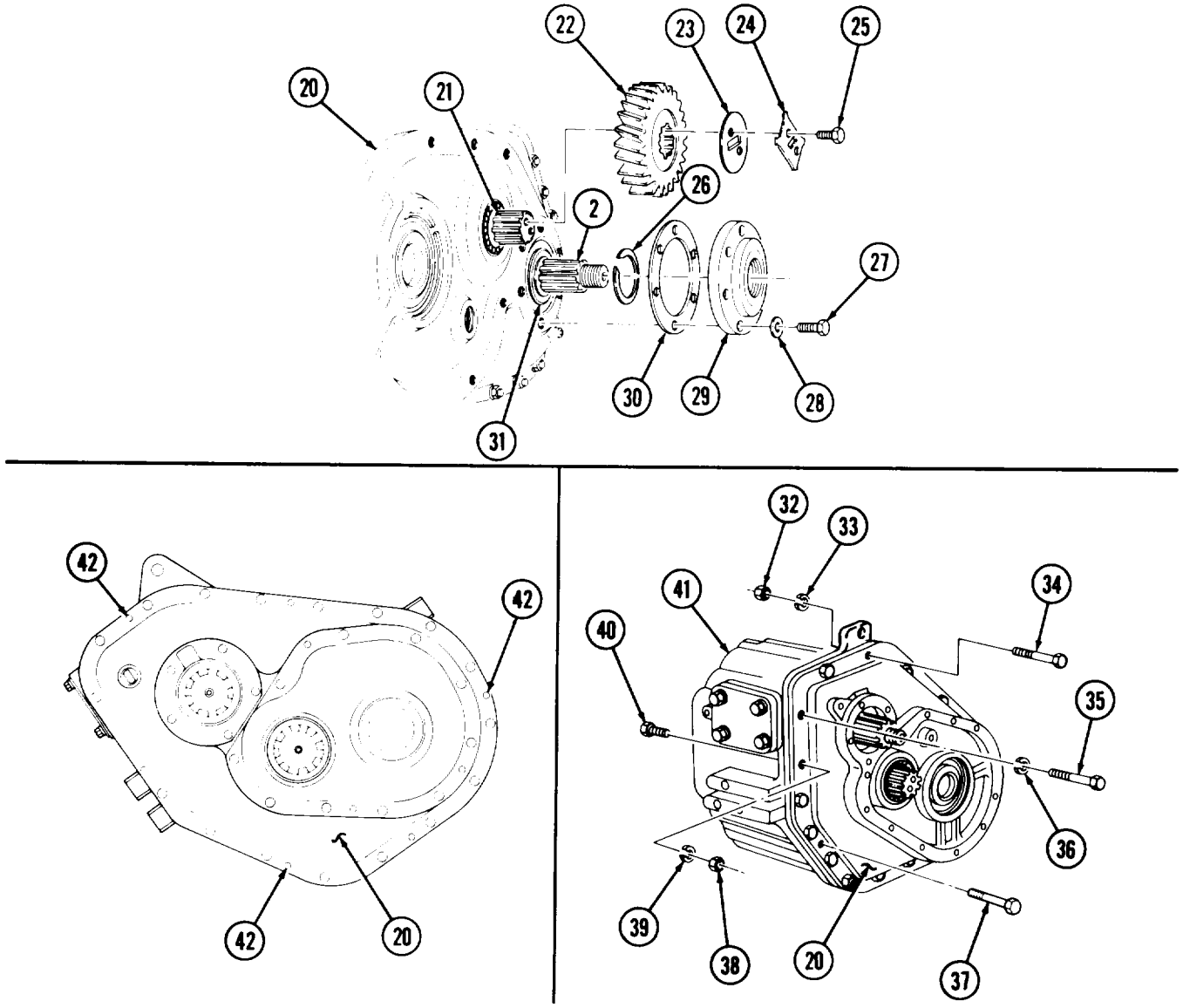

9-4. TRANSFER REPAIR (Contd)

41. Install chain at three points of front cover (4) with screws (2), washers (3), and nuts (5). Hold nuts (5) between flanges of front cover (4) and housing (6) while threading in screws (2).

NOTE

Assistant will help with step 42.

42. Maintain tension on chain with lifting device and continue evenly turning screws (1).
43. Remove front cover (4) from housing (6) and remove three screws (1).
44. Remove three screws (2), washers (3), nuts (5), and chain from front cover (4).
45. Remove gasket (7) from housing (6) and front cover (4). Discard gasket (7).
46. Lift rear output shaft (13) and intermediate shaft (12) from housing (6).
47. Remove four screws (8), lockwashers (9), cover (10), and gasket (11) from housing (6). Discard lockwashers (9) and gasket (11).
48. Remove shifter shaft detent screw (19), lockwasher (18), spring (17), plunger (16), and ball (15) from hole (14). Use small magnet as necessary. Discard lockwasher (18).

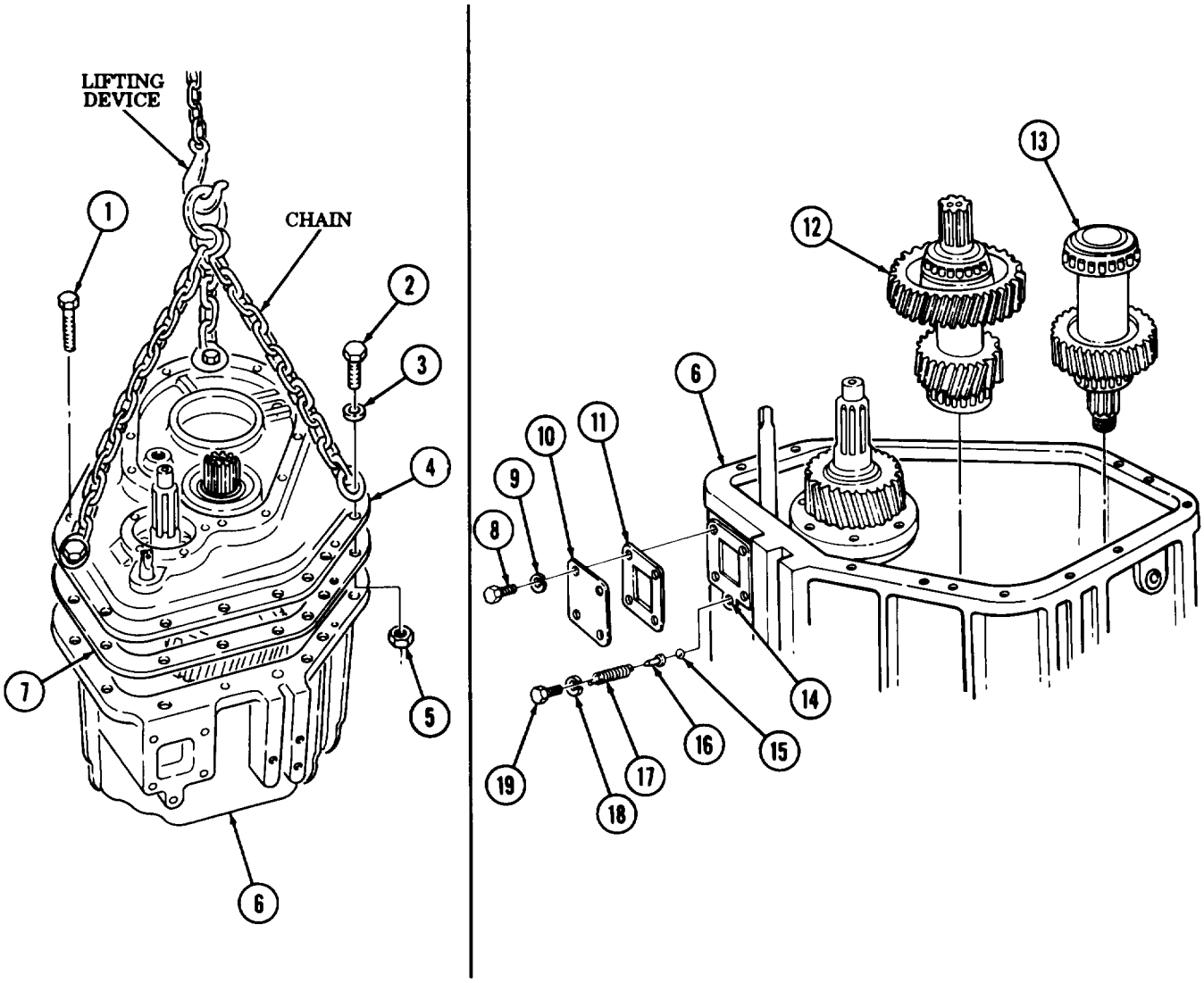

9-4. TRANSFER REPAIR (Contd)

49. Remove setscrew (26) from hole (25).
50. Turn slotted end of screw (24) counterclockwise until it stops.
51. Remove safety wire (21) from setscrew (20). Discard safety wire (21).
52. Remove setscrew (20) from shift fork (22) and range shifter shaft (23).
53. Working from front of housing (6), use two prybars and protective blocking to lift input shaft (27) and rear bearing (28) free of housing (6). Range shifter shaft (23) and shift fork (22) will come free when input shaft (27) is free of housing (6).

NOTE

- Seps 54 and 55 are an alternate method to remove input shaft.
- Assistant will help with steps 54 and 55.

54. Place housing (6) and input shaft (27) on arbor press with rear of housing (6) facing upward.
55. Press rear bearing (28), input shaft (27), shift fork (22), and range shifter shaft (23) out of housing (6).

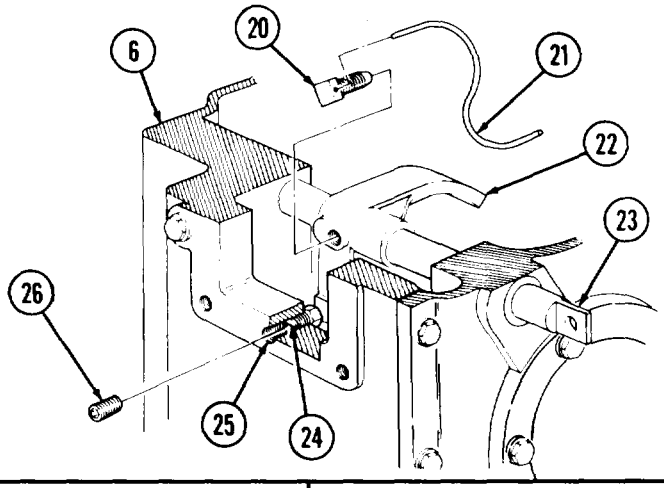

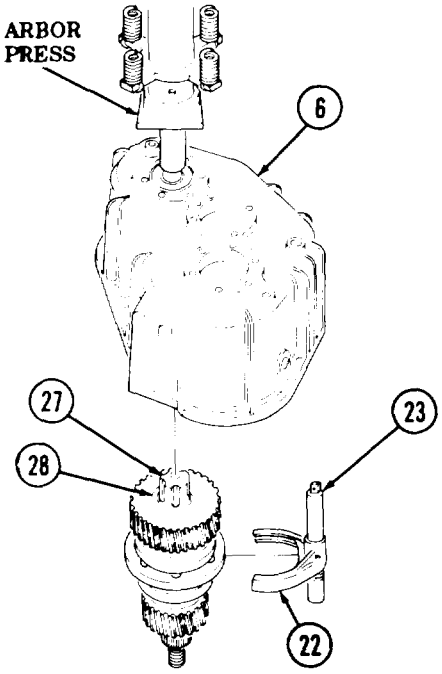

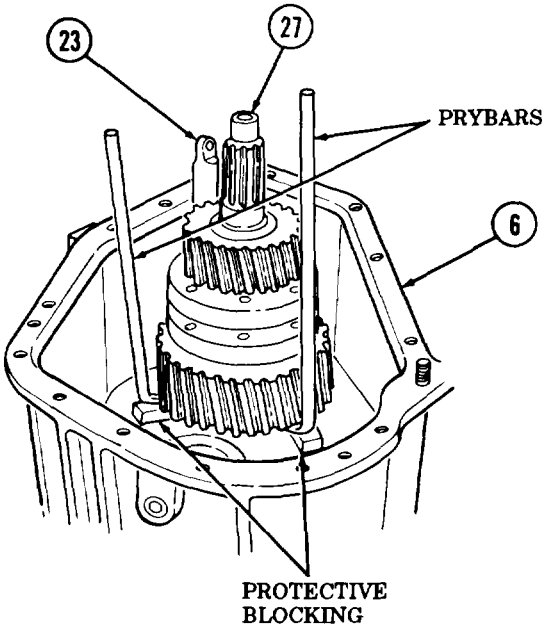

9-4. TRANSFER REPAIR (Contd)

NOTE

Assistant will help with steps 56 through 63.

56. Position input shaft (1) on arbor press with LO-speed gear (2) facing upward.
57. Press input shaft (1) out of spacer ring (3) and LO-speed gear (2).
58. Press two bearings (4) and spacer (5) out of LO-speed gear (2).
59. Remove synchronizer (6) from input shaft (1).
60. Remove retaining ring (9) from input shaft (1).
61. Position input shaft (1) on arbor press with HI-speed gear (12) facing upward.
62. Press input shaft (1) out of rear bearing (10), washer (11), and HI-speed gear (12).
63. Press two bearings (8) and spacer (7) out of HI-speed gear (12).

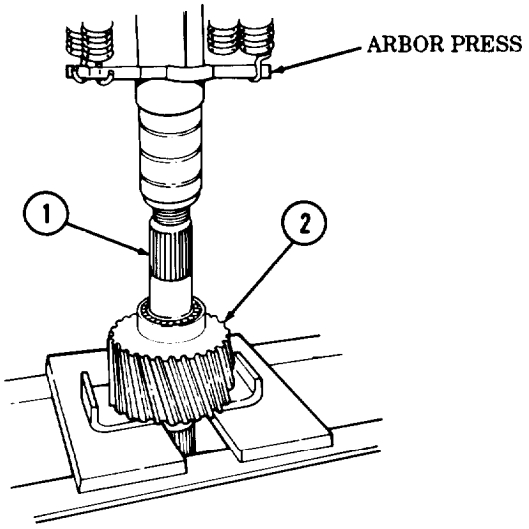

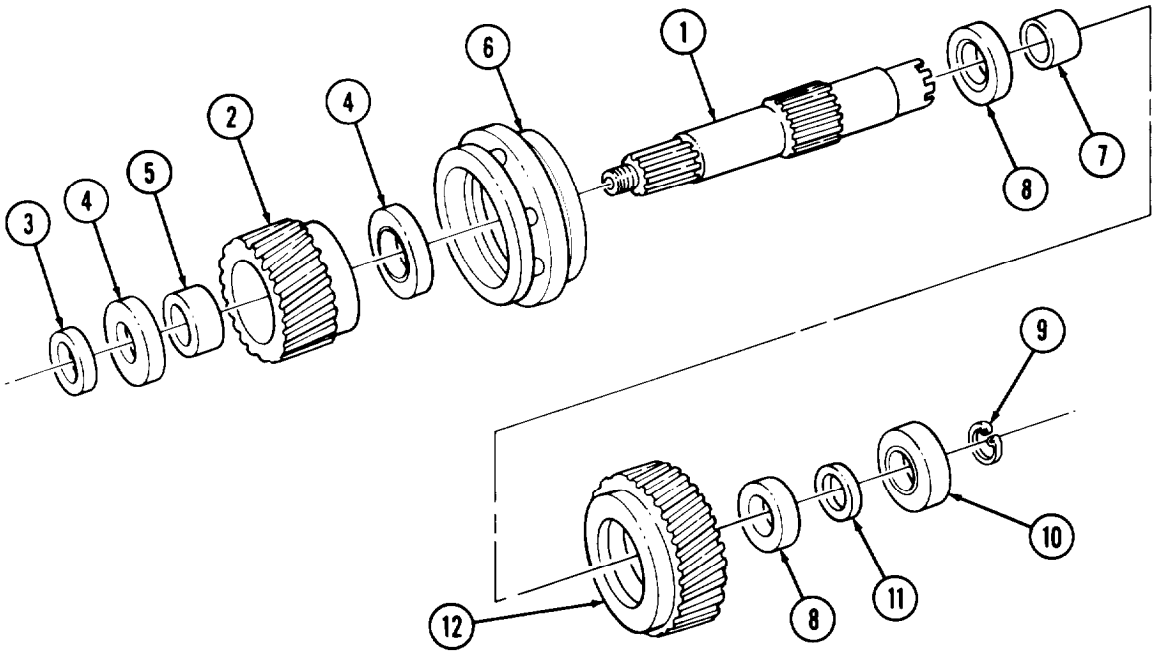

9-4. TRANSFER REPAIR (Contd)

64. Position intermediate shaft (16) on arbor press with LO-speed intermediate gear (14) facing upward.
65. Press intermediate shaft (16) out of LO-speed intermediate gear (14) and front roller bearing (13).
66. Position intermediate shaft (16) on arbor press with HI-speed intermediate gear (18) facing upward.
67. Press intermediate shaft (16) out of HI-speed intermediate gear (18) and rear roller bearing (17).
68. Remove two woodruff keys (15) from intermediate shaft (16). Discard woodruff keys (15).
69. Using arbor press and bearing cone adapter, remove bearing (23) from rear output shaft (19).
70. Position rear output shaft (19) on arbor press with rear output gear(21) facing upward.
71. Press rear output shaft. (19) out of rear output gear (21) and rear roller bearing (22).
72. Remove woodruff key (20) from rear output shaft (19), Discard woodruff key (20).
73. Remove range shifter shaft (24) from shift fork (25).

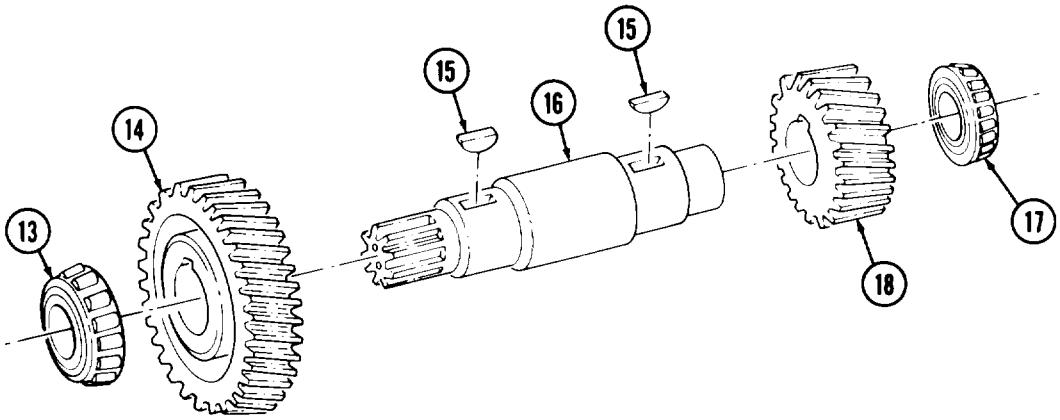

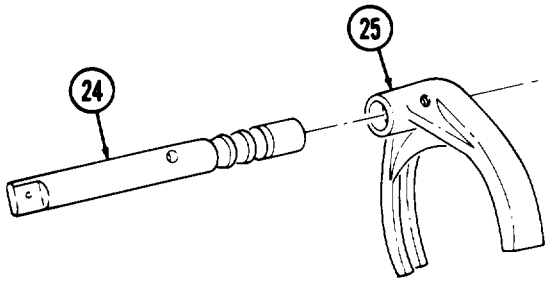

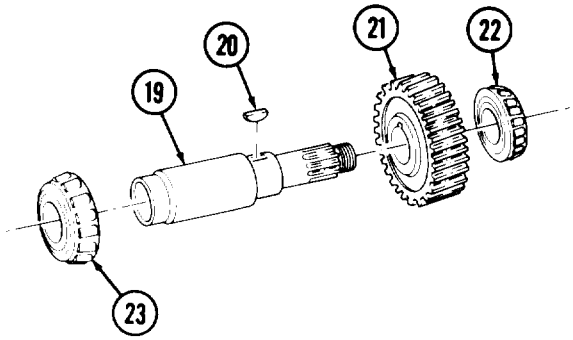

9-4. TRANSFER REPAIR (Contd)

74. Bend tabs of four tab lockwashers (2) away from cover (3) and screws (1).
75. Remove four screws (1), tab lockwashers (2), cover (3), and gasket (13) from cylinder (12) and front output shaft cover (4). Discard tab lockwashers (2) and gasket (13).
76. Remove cylinder (12) from piston (9).
77. Remove locknut (11), washer (10), piston (9), and washer (7) from sprag shifter shaft (5). Discard locknut (11).
78. Remove two seals (8) from piston (9). Discard seals (8).
79. Remove gasket (6) from front output shaft cover (4). Discard gasket (6).
80. Position front output shaft cover (4) on arbor press and press front output shaft (17) out of bearing (14) and front output shaft housing (4). Clutch fork (20) and sprag shifter shaft (5) will come out of front output shaft cover (4) at same time.
81. Aline teeth of shitt gear (15) with gaps in teeth of sprags (16) and remove shift gear (15).
82. Remove safety wire (18) from setscrew (19) and clutch fork (20). Discard safety wire (18).
83. Remove setscrew (19) and sprag shifter shaft (5) from clutch fork (20).

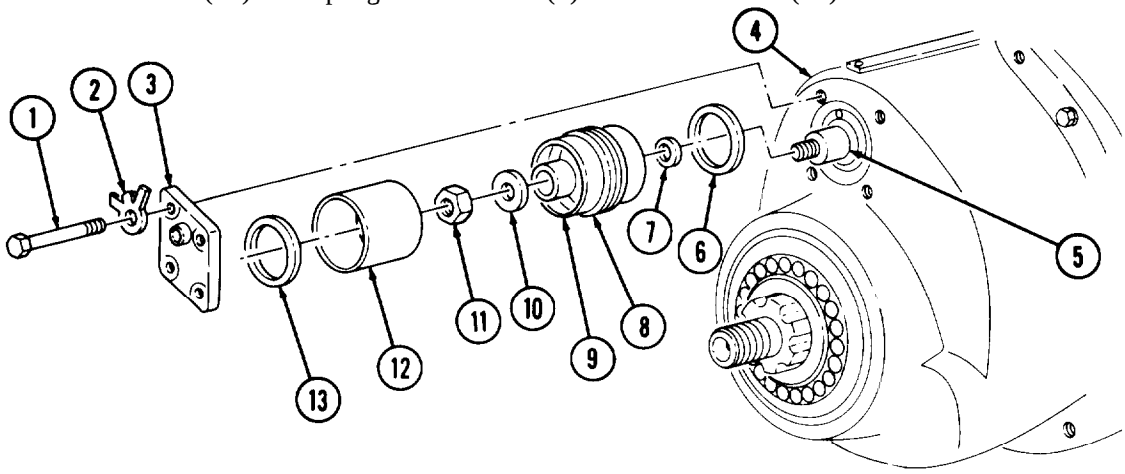

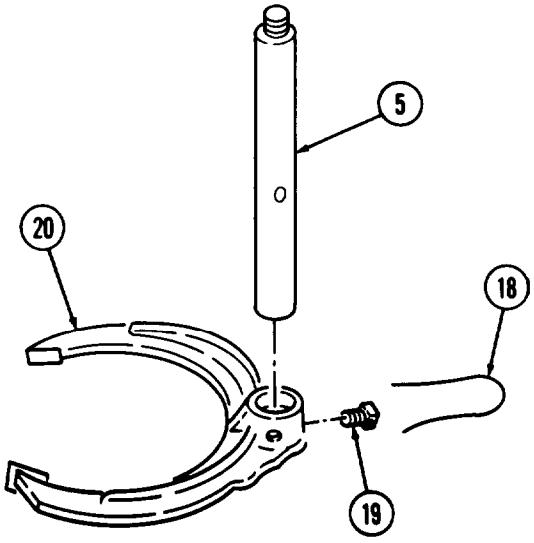

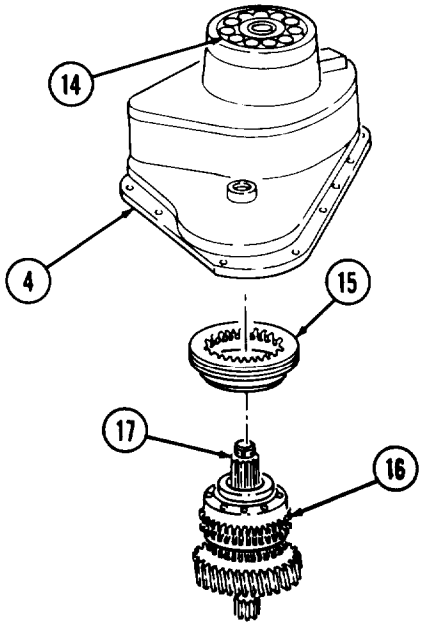

9-4. TRANSFER REPAIR (Contd)

84. Remove snapring (20) from inner sprag race (21).

85. Holding retaining washer (23) tight against front sprag race (22), lift and turn front sprag race (22) counterclockwise off inner sprag race (21). Lay front sprag race (22) upside down on work surface.

86. Remove retaining washer (23), spring (26), forty-one sprags (25), and spring (24) from front sprag race (22).

87. Place retaining washer (23) over rear sprag race (27). Lift and turn rear sprag race (27) clockwise off inner sprag race (21). Lay rear sprag race (27) on work surface right side UP as removed.

88. Remove retaining washer (23), spring ('M), forty-one sprags (29), and spring (30) from rear sprag race (27).

89. Remove rear sprag retaining snapring (31) from inner sprag race (21).

NOTE

Assistant will help with step 90.

90. Position front output shaft (16) on arbor press and press front output shaft (16) out of driven gear (32) and inner sprag race (21).

91. Remove woodruff key (33) from front output shaft (16). Discard woodruff key (33).

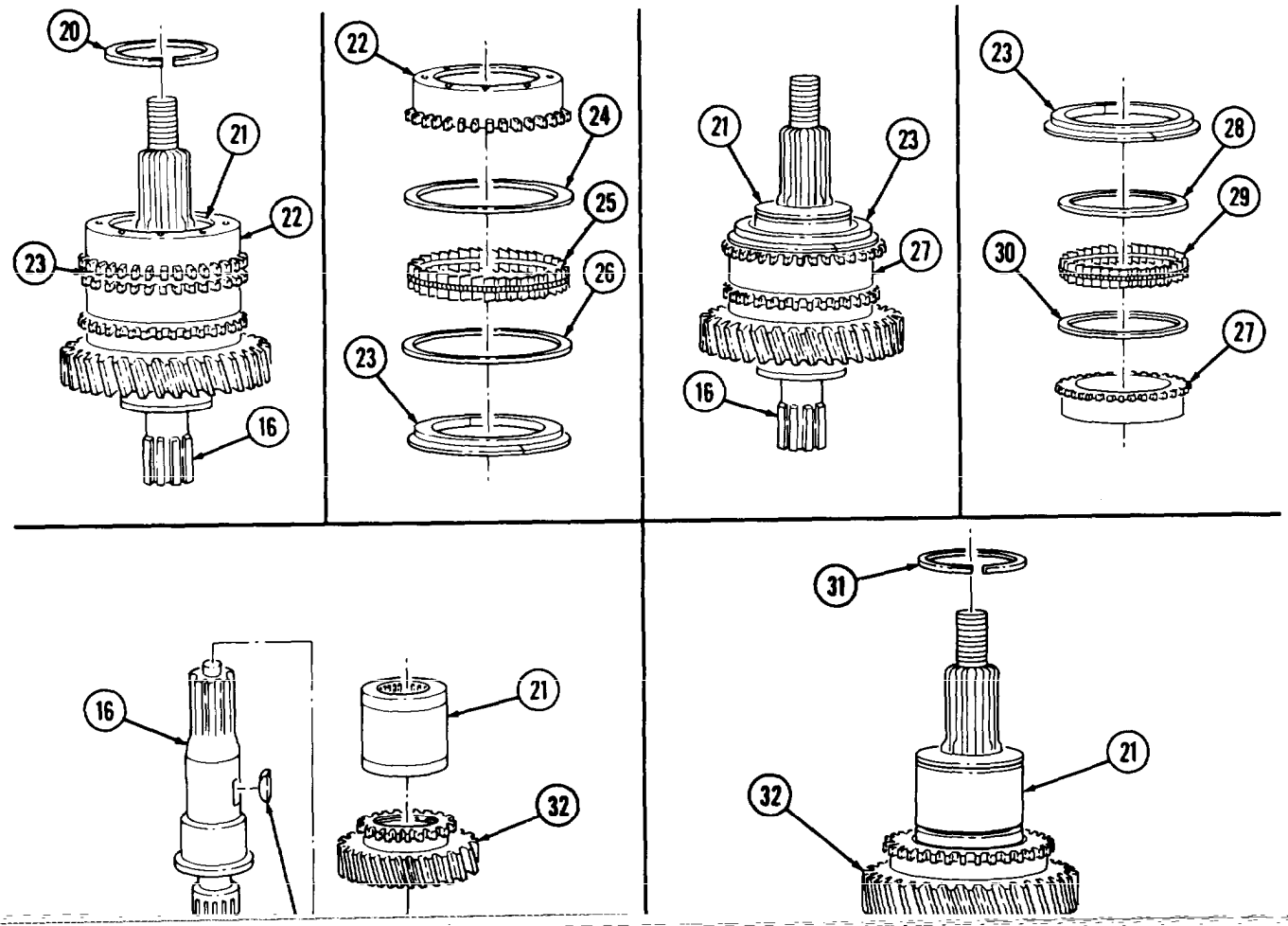

9-4. TRANSFER REPAIR (Contd)

92. Remove seal (4) from front output shaft cover (1). Discard seal (4).
93. Remove two snaprings (5) and bearing (6) from front output shaft cover (1).
94. Remove shifter shaft washer (3) and seal (2) from front output shaft cover (1). Discard seal (2).
95. Remove seal (8) from front cover (7). Discard seal (8).
96. Using bearing oil seal replacer, remove seal (10) from bearing retainer (9). Discard seal (10).
97. Using bearing remover/replacer, remove seal (12) from cap (11). Discard seal (12).

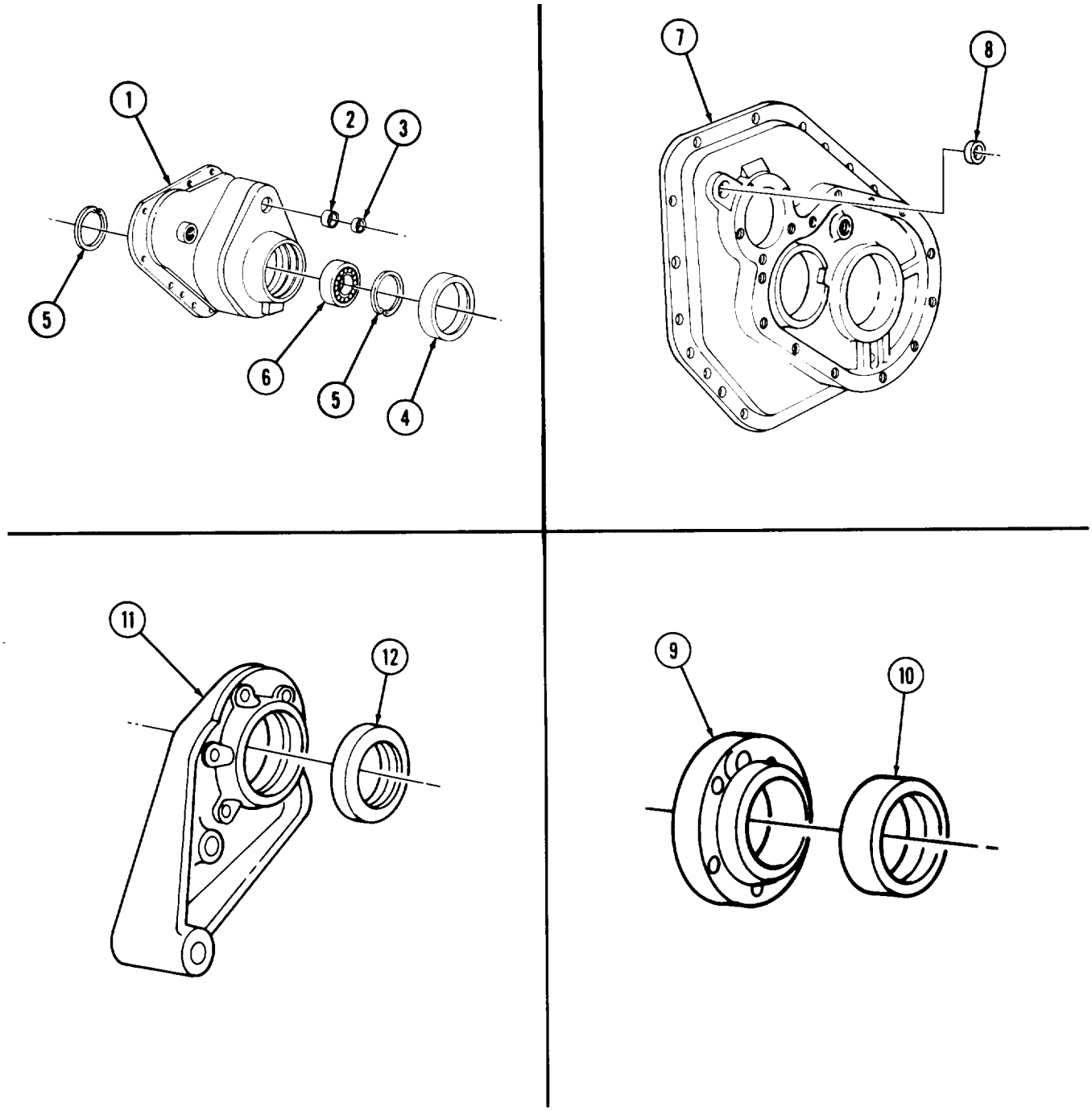

9-4. TRANSFER REPAIR (Contd)

b. Cleaning and Inspection

1. For general cleaning instructions, refer to para. 2-8.
2. For general inspection instructions, refer to para. 2-9.
3. Inspect bearings (14) and (17) in housing (13) and front cover (7). Refer to TM 9-214. Replace bearing(s) (14) or (17) and race(s) (subtask c.) if bearing(s) (14) or (17) fail inspection.
4. Inspect housing (13) for breaks, cracks, stripped threads, and wear. Refer to table 9-1, Transfer Housing and Covers Wear Limits, for measurements. Replace housing (13) if damaged or worn.
5. Inspect friction plug (15) for looseness and evidence of leakage. Replace friction plug (15) if loose or leaking.
6. Inspect front cover (7) for breaks, cracks, stripped threads, and wear. Refer to table 9-1, Transfer Housing and Covers Wear Limits, for measurements. Replace front cover (7) if damaged or worn.
7. Inspect front output shaft cover (1) for breaks. cracks. stripped threads, and wear. Refer to table 9-1. Transfer Housing and Covers Wear Limits, for measurements. Replace front output shaft. cover (1) if damaged or worn.

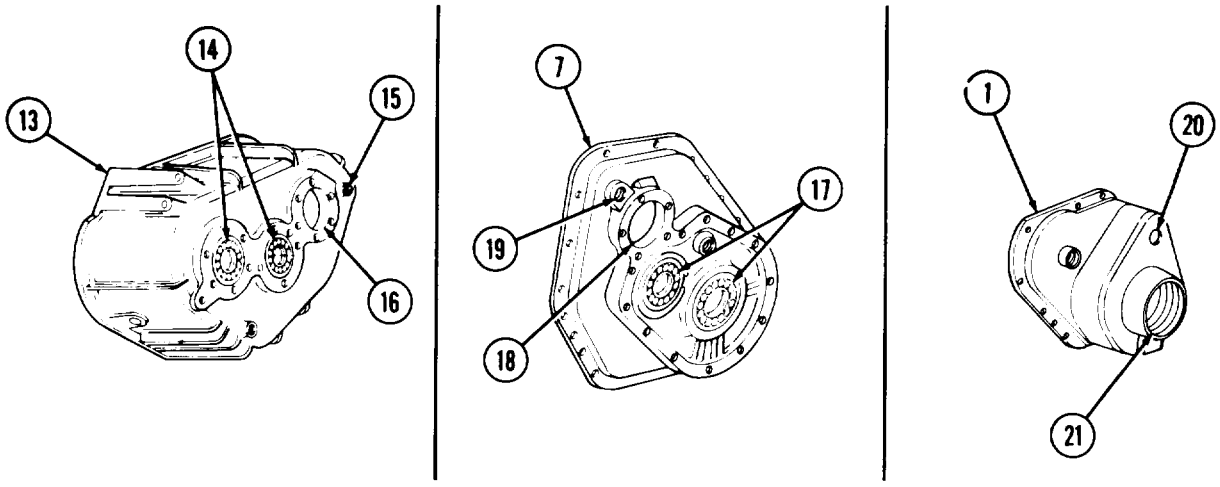

Table 9-1. Transfer Housing and Covers Wear Limits.

ITEM NO.	ITEM/POINT OF MEASUREMENT	WEAR LIMITS/TOLERANCES	
		INCHES	MILLIMETERS
16	Input shaft bore	4.3305-4.3315	109.995-110.020
18	Input shaft bore	4.7242-4.7252	119.995-120.020
19	Shifter shaft bore	0.9995-1.0015	25.387-25.438
20	Front axle shifter bore	0.8745-0.8765	22.212-22.263
21	Front axle shaft bore	4.002-4.004	101.65-101.70

9-4. TRANSFER REPAIR (Contd)

8. Inspect three flanges (2) for twisted splines, cracks, breaks, bent or missing dust covers, and scoring on sealing surface. If sealing surface of wear sleeve (1) is scored, replace wear sleeve (1). If no wear sleeve (1) is present, install wear sleeve (1). Follow instructions in wear sleeve kit (part number 5705699) for removal and installation of wear sleeve (1). Replace flanges (2) if damaged.
9. Inspect synchronizer (3) for shift operation when lubricated. Collar (4) must move to three detent positions. Shifting from HI or LO range to NEUTRAL must be easier than from NEUTRAL to HI or LO range. Synchronizer (3) must slide easily on splines of input shaft (5). Replace damaged synchronizer (3) as an assembly.
10. Measure internal diameter of two sprag races (6). Refer to table 9-2, Sprag Race, Brakedrum, and Shifter Shafts Wear Limits, for measurements. Replace if worn beyond wear limits.
11. Inspect brakedrum (7) for cracks, breaks, and scoring. Replace brakedrum (7) if cracked, broken, or scoring is over 0.031 in. (0.79 mm) deep. Brakedrum (7) can be repaired to wear limit. Refer to table 9-2, Sprag Race, Brakedrum, and Shifter Shafts Wear Limits, for measurements.
12. Inspect sprag shifter shaft (8) for bends, cracks, damaged threads, scoring on seal area, and burred setscrew hole. Measure outside diameter at straight end and at seal area. Refer to table 9-2, Sprag Race, Brakedrum, and Shifter Shafts Wear Limits, for measurements. Repair to replace sprag shifter shaft (8) if damaged or worn beyond limits.
13. Inspect range shifter shaft (9) for bends, cracks, burred detent grooves (10), burred setscrew hole, and scoring at straight end and seal area. Measure outside diameter at seal area and straight end. Refer to table 9-2, Sprag Race, Brakedrum, and Shifter Shats Wear Limits, for measurements. Minor grooving by detent ball on lands between detent grooves (10) is acceptable. Repair or replace range shifter shaft (9), if worn beyond limits or damaged.

Table 9-2. Sprag Race, Brakedrum, and Shifter Shafts Wear Limits.

ITEM NO.	ITEM/POINT OF MEASUREMENT	WEAR LIMITS/TOLERANCES	
		INCHES	MILLIMETERS
6	Sprag race (2) – inner diameter	4.0215-4.0275	102.146-102.299
7	Parking brakedrum		
	Inner diameter - maximum	13.410	340.61
	Outer diameter – minimum	13.965	354.71
8	Sprag shifter shaft - outer diameter	0.8715-0.8725	22.136-22.162
9	Range shifter shaft - outer diameter	0.9445-0.9955	23.99-25.29

9-4. TRANSFER REPAIR (Contd)

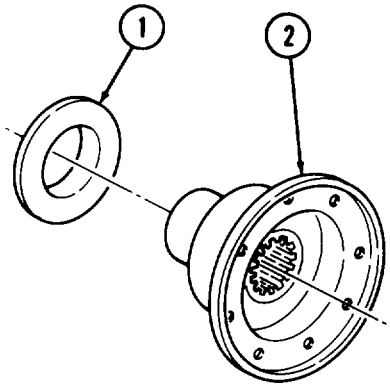

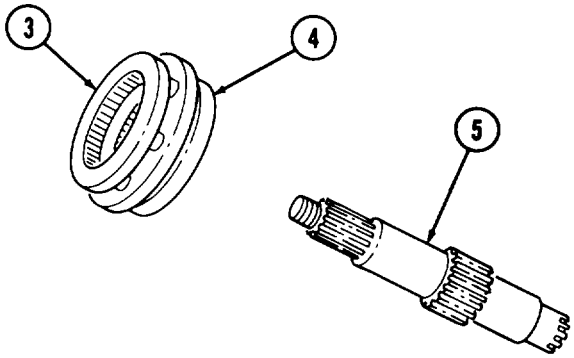

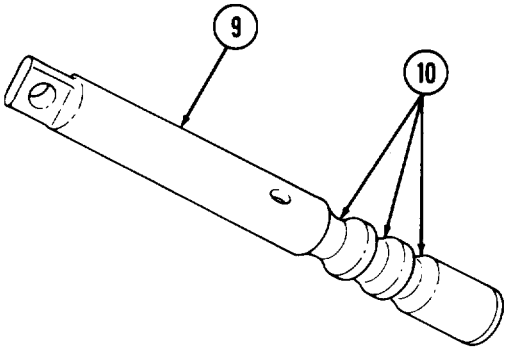

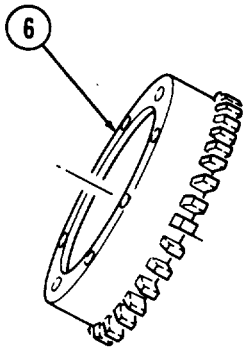

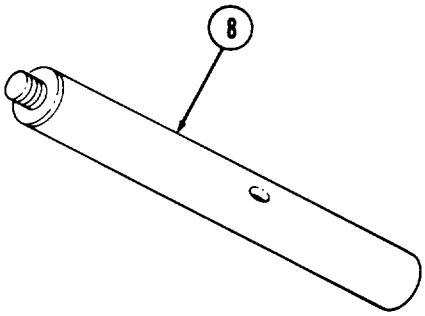

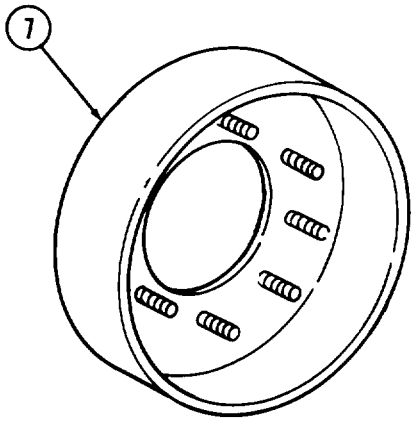

9-4. TRANSFER REPAIR (Contd)

14. When any gear, bearing, collar, or shaft fails, other mated, adjacent, or fitted parts should be inspected. Replace all parts worn beyond limits. Refer to table 9-3, Shaft Assemblies with Fitted and Mated Parts Wear Limits, for measurements.

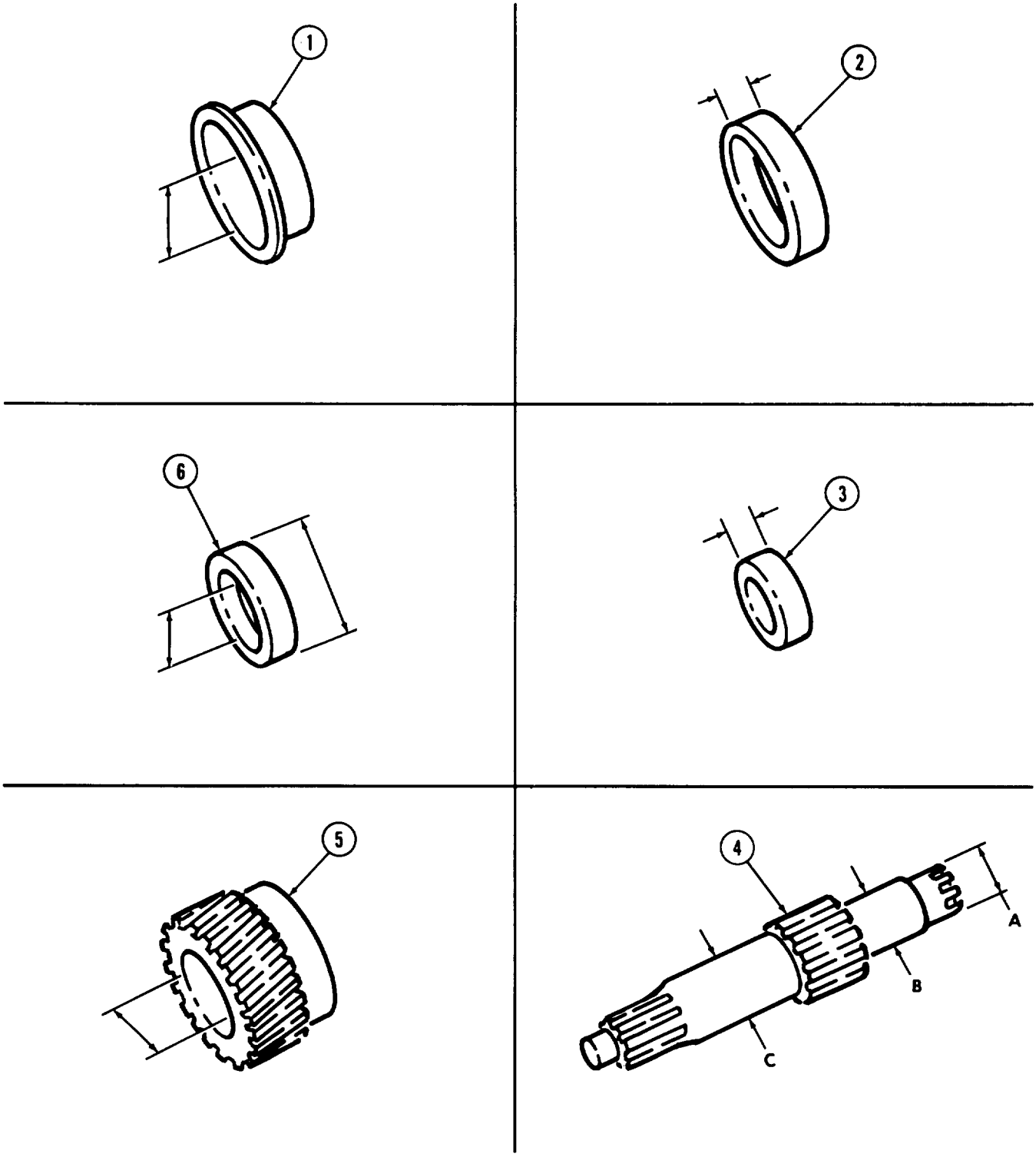

9-4. TRANSFER REPAIR (Contd)

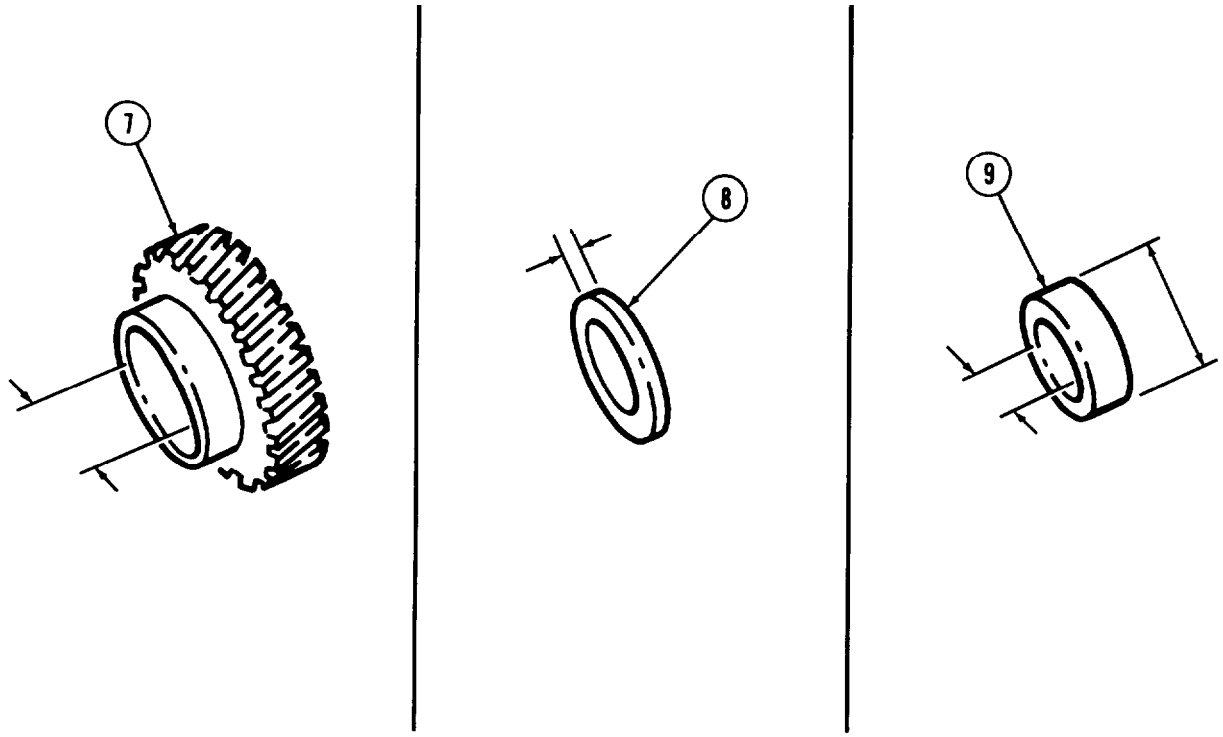

Table 9-3. Shaft Assemblies with Fitted and Mated Parts Wear Limits.

ITEM NO.	ITEM/POINT OF MEASUREMENT	WEAR LIMITS/TOLERANCES	
		INCHES	MILLIMETERS
1	Bearings		
	Input shaft, front, double ball bearing		
	Inner diameter	2.1648-2.1654	54.986-55.001
	Outer diameter	4.7238-4.7244	119.985-120.00
2	Sprag ring, input shaft, bearing, front - thickness	0.196-0.200	4.98-5.08
3	Spacer, input shaft, gear bearings (2) – thickness	1.449-1.453	36.80-36.91
4	Input shaft (3 places):		
a	Rear bearing	1.9684-1.9689	49.997-50.010
b	High gear	2.1651-2.1656	54.994-55.006
c	Low gear and front bearing	2.1651-2.1656	54.994-55.006
5	Input low-speed gear – inner diameter	3.9361-3.9371	99.977-100.002
6	Input shaft, gears, ball bearing		
	Inner diameter	2.1648-2.1654	54.986-55.001
	Outer diameter	3.9364-3.9370	99.985-100.00
7	Input high-speed gear - inner diameter	3.9361-3.9371	99.977-100.002
8	Washer, input shaft, bearing, rear - thickness	0.250-0.255	6.35-6.48
9	Input shaft, rear, ball bearing		
	Inner diameter	1.9630-1.9685	49.860-50.000
	Outer diameter	4.3301-4.3307	109.985-110.000

9-4. TRANSFER REPAIR (Contd)

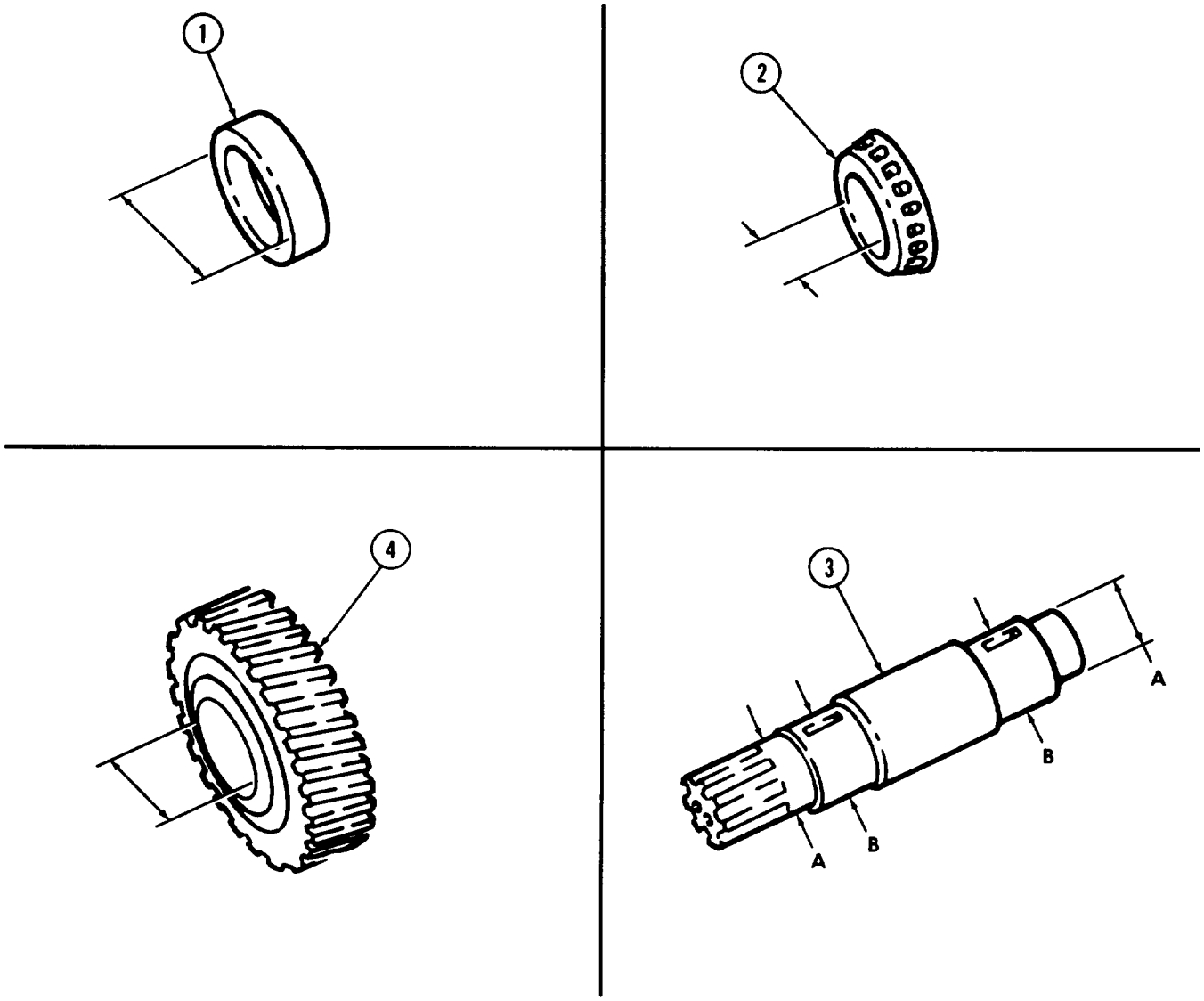

Table 9-3. Shaft Assemblies with Fitted and Mated Parts Wear Limits (Contd).

ITEM NO.	ITEM/POINT OF MEASUREMENT	WEAR LIMITS/TOLERANCES	
		INCHES	MILLIMETERS
1	Intermediate shaft, roller bearing (2) – outer diameter (outer race), (2)	4.1250-4.1255	104.775-104.788
2	Intermediate shaft, roller bearing (2) – inner diameter	2.2500-2.5005	57.150-63.513
3	Intermediate shaft (4 places):		
a	Front and rear bearing (2 places)	2.366-2.369	60.10-60.17
b	Low-speed and high-speed gear (2 places)	2.365-2.375	60.07-60.33
4	Intermediate low-speed gear and intermediate high speed gear - inner diameter	2.375-2.376	60.33-60.35

9-4. TRANSFER REPAIR (Contd)

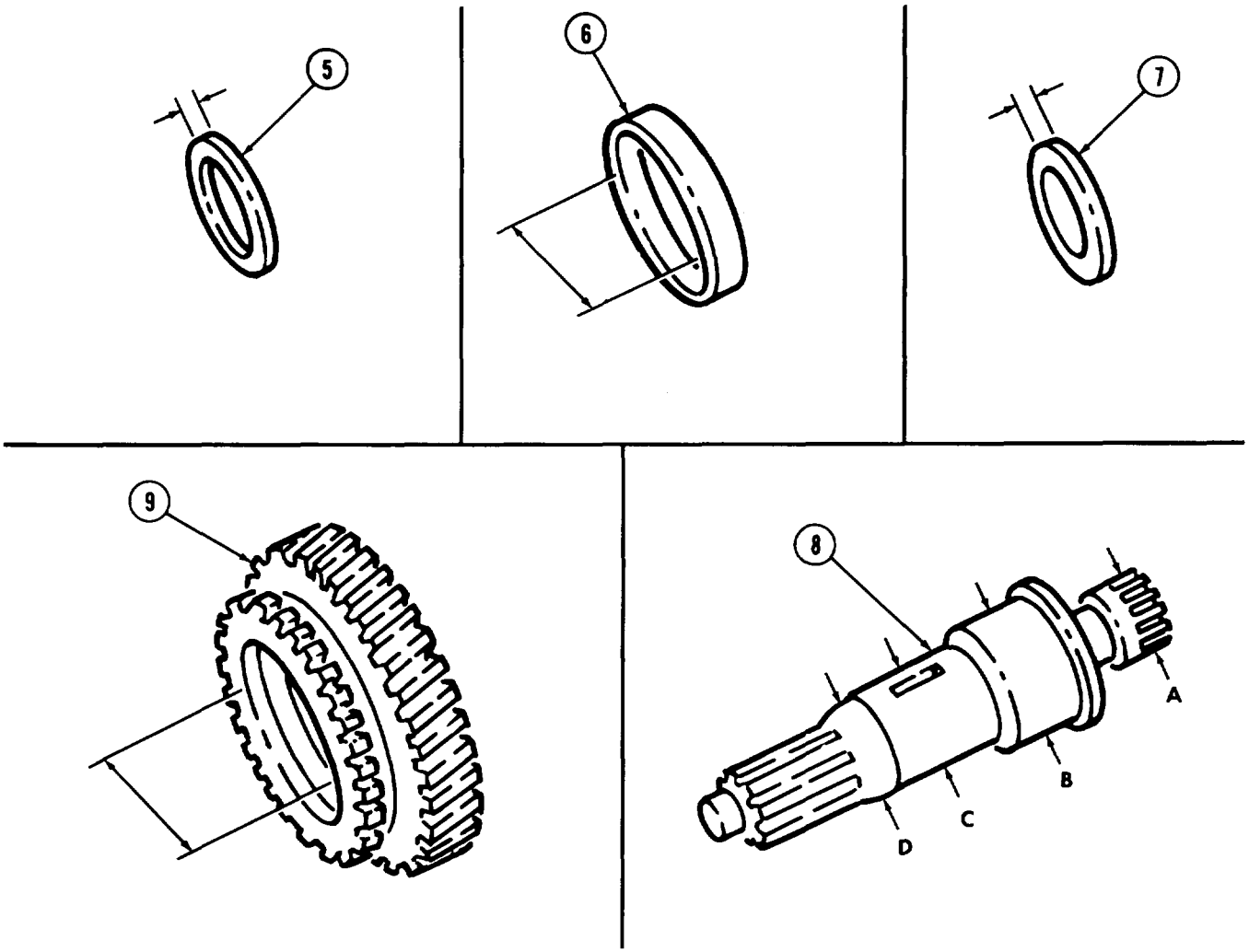

Table 9-3. Shaft Assemblies with Fitted and Mated Parts Wear Limits (Contd).

ITEM NO.	ITEM/POINT OF MEASUREMENT	WEAR LIMITS/TOLERANCES	
		INCHES	MILLIMETERS
5	Collar, front shaft bearing, front - thickness	0.234	5.94
6	Front output shaft, ball bearing		
	Inner diameter	2.1648-2.1654	54.986-55.0010
	Outer diameter	3.9364-3.9370	99.985-100.000
7	Collar, front shaft bearing, rear – thickness	0.377-0.382	9.58-9.70
8	Front output shaft (4 places):		
a	Rear ridges - outer diameter	1.8103-1.8108	45.982-45.994
b	Driven gear area – outer diameter	2.9985-2.9990	76.162-76.175
c	Inner sprag race area – outer diameter	2.3765-2.3775	60.363-60.389
d	Front bearing area - outer diameter	2.366-2.369	60.01-60.17
9	Front output driven gear - inner diameter	3.001-3.002	76.23-76.25

9-4. TRANSFER REPAIR (Contd)

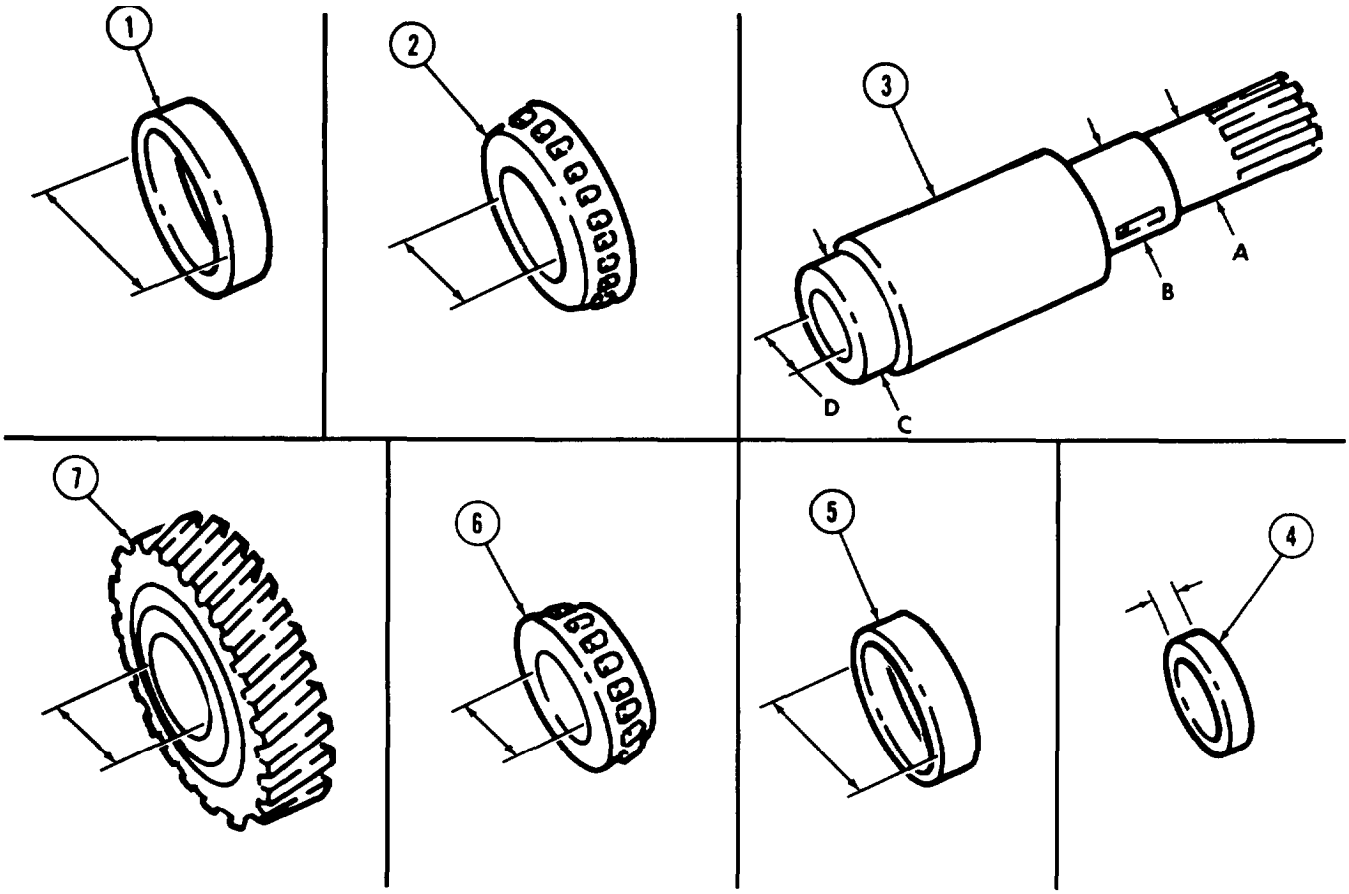

Table 9-3. Shaft Assemblies with Fitted and Mated Parts Wear Limits (Contd).

ITEM NO.	ITEM/POINT OF MEASUREMENT	WEAR LIMITS/TOLERANCES INCHES	MILLIMEIERS
1	Rear output shaft, front, roller bearing - outer diameter (outer race)	4.9375-4.9380	125.413-125.425
2	Rear output shaft, front, roller bearing - inner bearing	2.8750-2.8755	73.025-73.038
3	Rear output shaft (4 places):		
a	Rear bearing area - outer diameter	2.0010-2.0015	50.825-50.838
b	Rear output gear area - output diameter	2.3765-2.3775	60.363-60.389
c	Front bearing area - outer diameter	2.8765-2.8770	73.063-73.076
d	Internal bore - inner diameter	1.8120-1.8125	46.025-46.038
4	Spacer, rear output shaft - thickness	0.713-0.719	18.11-18.26
5	Rear output shaft, rear, roller bearing – outer diameter (outer race)	4.1250-4.1255	104.775-104.788
6	Rear output shaft, rear, roller bearing - inner diameter	2.0000-2.0005	50.800-50.813
7	Rear output gear - inner diameter	2.375-2.376	60.33-60.35

9-4. TRANSFER REPAIR (Contd)

c. Repair

1. For general repair instructions, refer to para. 2-10.
2. Housing (8), front cover (9), and front output shaft cover (10) repair:
   a. Use care when drilling blind holes to not penetrate base wall.
   b. Do not use threaded insert repair if the narrowest wall thickness after preparatory drilling is less than 3/4 of the new drilled hole diameter.
   c. If stud is necked down or threads on stud are damaged in nut locking area, replace stud. Follow procedures in para. 2-10.
   d. Nicks and scoring in non-fit or non-seal areas do not require repair.
   e. External burrs will be removed to enhance paint retention.
3. Using fine crocus cloth, remove minor scoring and corrosion in cylinder (11).

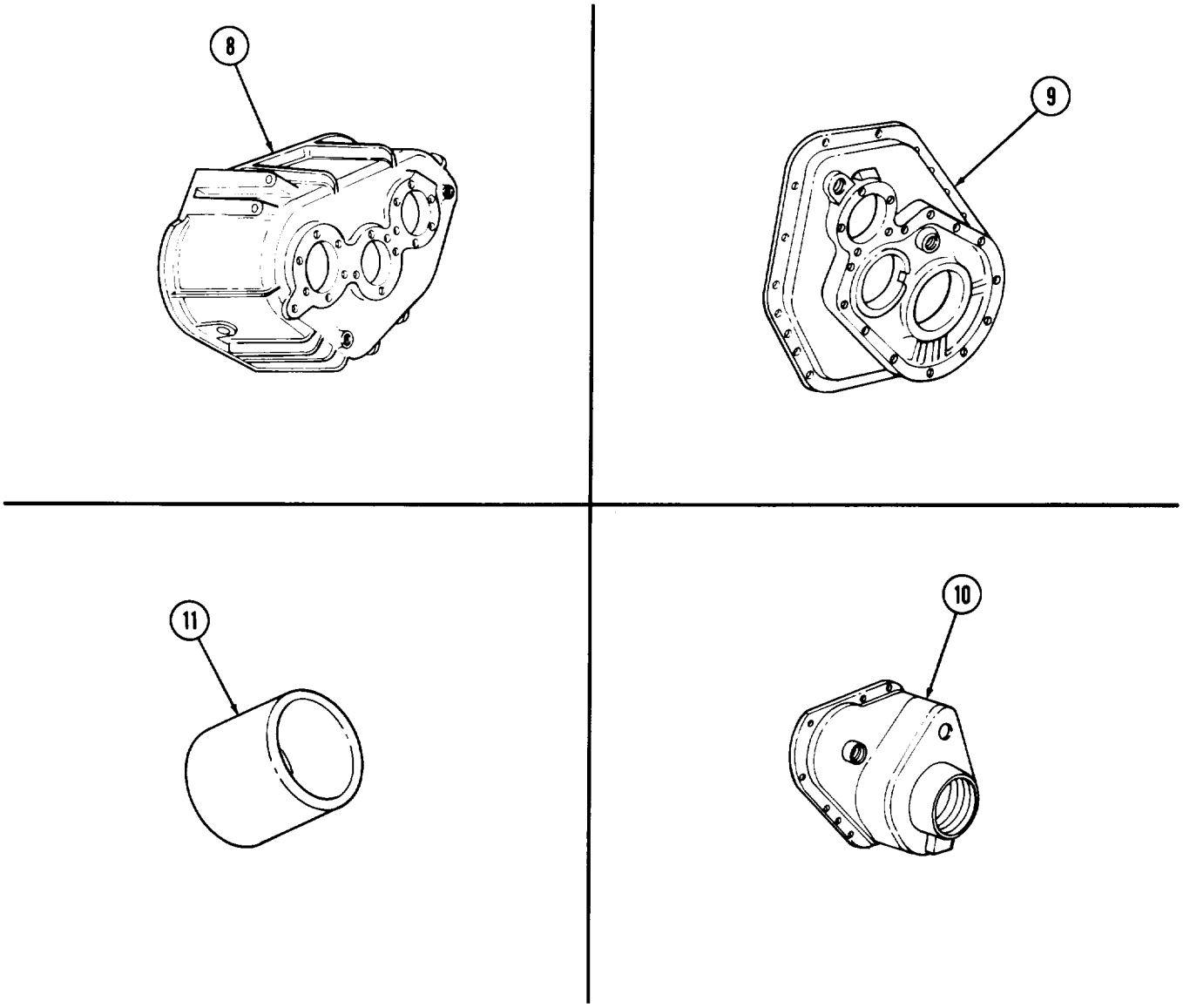

9-4. TRANSFER REPAIR (Contd)

4. Gears (2) and splines (1) repair:
   a. Remove raised edges of nicks on gear teeth or splines using a fine mill file or crocus cloth. Do not remove extra metal to remove actual nick.
   b. Minor scoring on press fit surfaces do not require repair.
   c. Scoring on gear teeth in direction of tooth motion is not repairable. Replace gear.
   d. Minor nicks and burrs on teeth of splines (1) are removed using a fine mill file held and moved parallel to spline surface.

NOTE

Mated races and bearings must be replaced together.

5. If required to replace bearings (5) in front cover (3), remove snaprings (6), use bearing remover/replacer to press out bearings (5) with mated races (4).
6. To replace bearings (9) in housing (7), use bearing remover/replacer to press out bearings (9) and mated races (8).

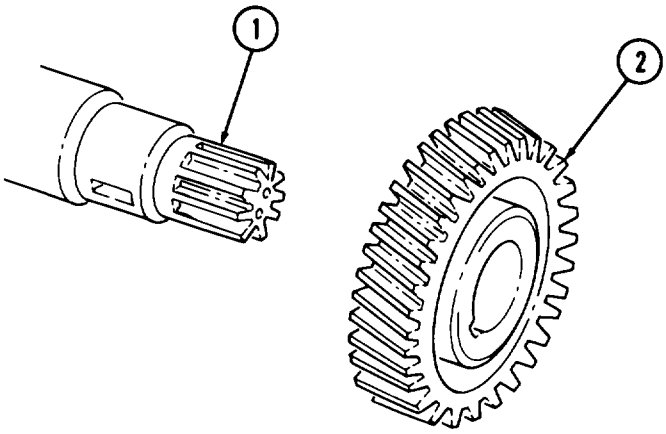

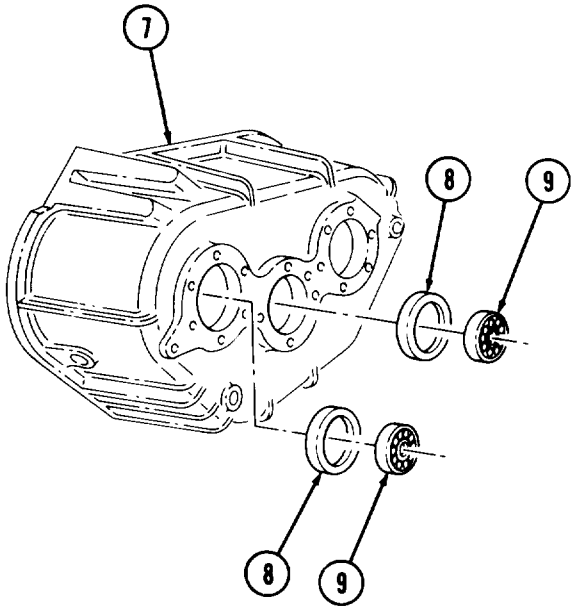

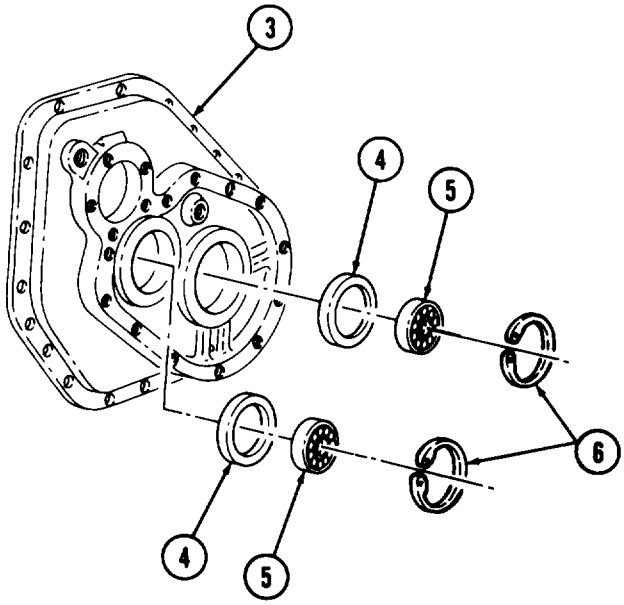

9-4. TRANSFER REPAIR (Contd)

NOTE

- Keep all parts clean and protected from dust until installation.
- Coat all bearings, gears, clutches, seals, etc. with OE/HDO 80/90 gear oil at time of assembly.
- Coat shafts and bores of gears with white carbonate pigment prior to press type assembly. Remove excess carbonate pigment after assembly and coat parts with OE/HDO 80/90 gear oil.

d. Assembly

NOTE

Assistant will help with steps 1 through 3.

1. Using bearing remover/replacer, press bearing races (8) below edge of housing (7).
2. Using bearing remover/replacer, install new seal (11) in bore of cap (10).
3. Install snapnngs (6) in grooves of bores of front cover (3) and use bearing remover/replacer to press in races (4) to seat against snaprings (6).
4. Install new seal (12) in shifter bore of front cover (3) with lip of seal (12) facing in.
5. Using bearing oil seal replacer, install new seal (14) in bearing retainer (13).

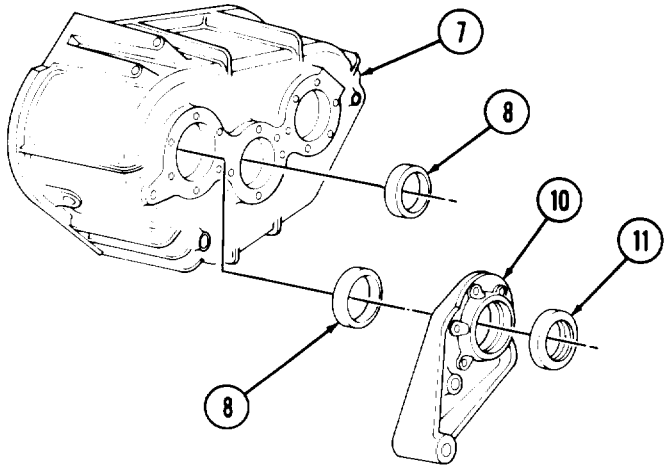

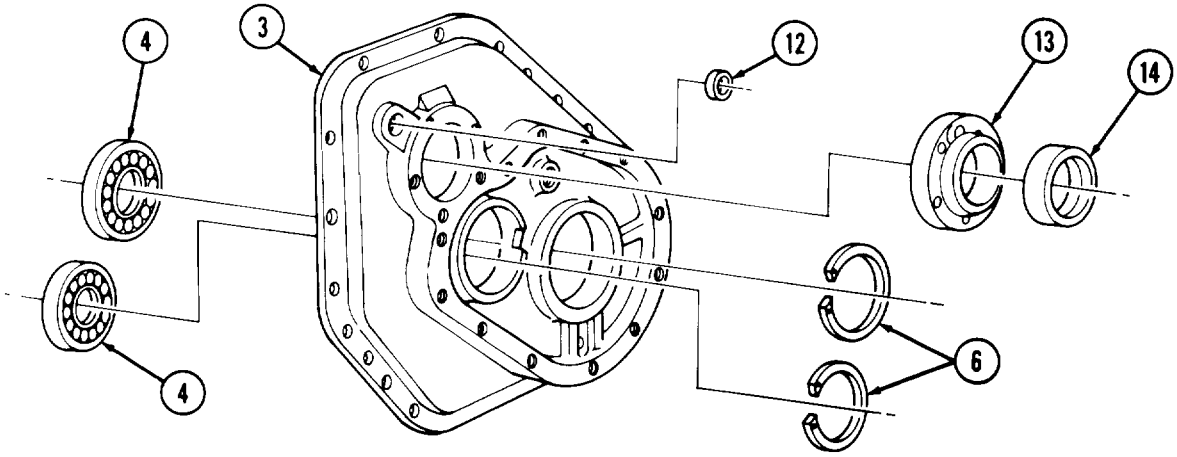

9-4. TRANSFER REPAIR (Contd)

6. Install snapnng (9) in inner groove of bore (7) of front output shaft cover (8).
7. Install ball bearing (6) into bore (7) of front output shaft cover (8).
8. Install snapring (5) in outer groove of bore (7) against ball bearing (6).
9. Install new seal (4) in bore (7) and seat to shoulder in bore (7).
10. Install new seal (2) in bore (1) of front output shaft cover (8).
11. Install washer (3) in counterbore of bore (1) and stake washer (3) in three places in counterbore.
12. Install new woodruff key (17) in front output shaft (11). Ensure there are no burrs on woodruff key (17) after installation.
13. Install snapring (13) on short end (15) of inner sprag race (14). Do not allow snapring (13) to score sprags contact surface of inner sprag race (14).
14. Position inner sprag race (14) on arbor press with snapring (13) end UP. Ensure that there is clearance for front output shaft (11) to pass through inner sprag race (14).
15. Slide gear (12) onto front output shaft (11) with sprag clutch teeth (16) toward threaded end of front output shaft (11). Ensure gear face of gear (12) is seated against shoulder (10) of front output shaft (11).

NOTE

Assistant will help with steps 16 and 17.

16. Holding gear (12) against shoulder (10) and front output shaft (11) place front output shaft (11) into inner sprag race (14), and aline key (17) with keyway in inner sprag race (14).
17. Continue holding gear (12) in place and press front output shaft (11) into inner sprag race (14). Press front output shaft (11) until inner sprag race (14) is seated against shoulder (10) of front output shaft (11). Remove front output shaft (11), gear (12), and inner sprag race (14) from arbor press.

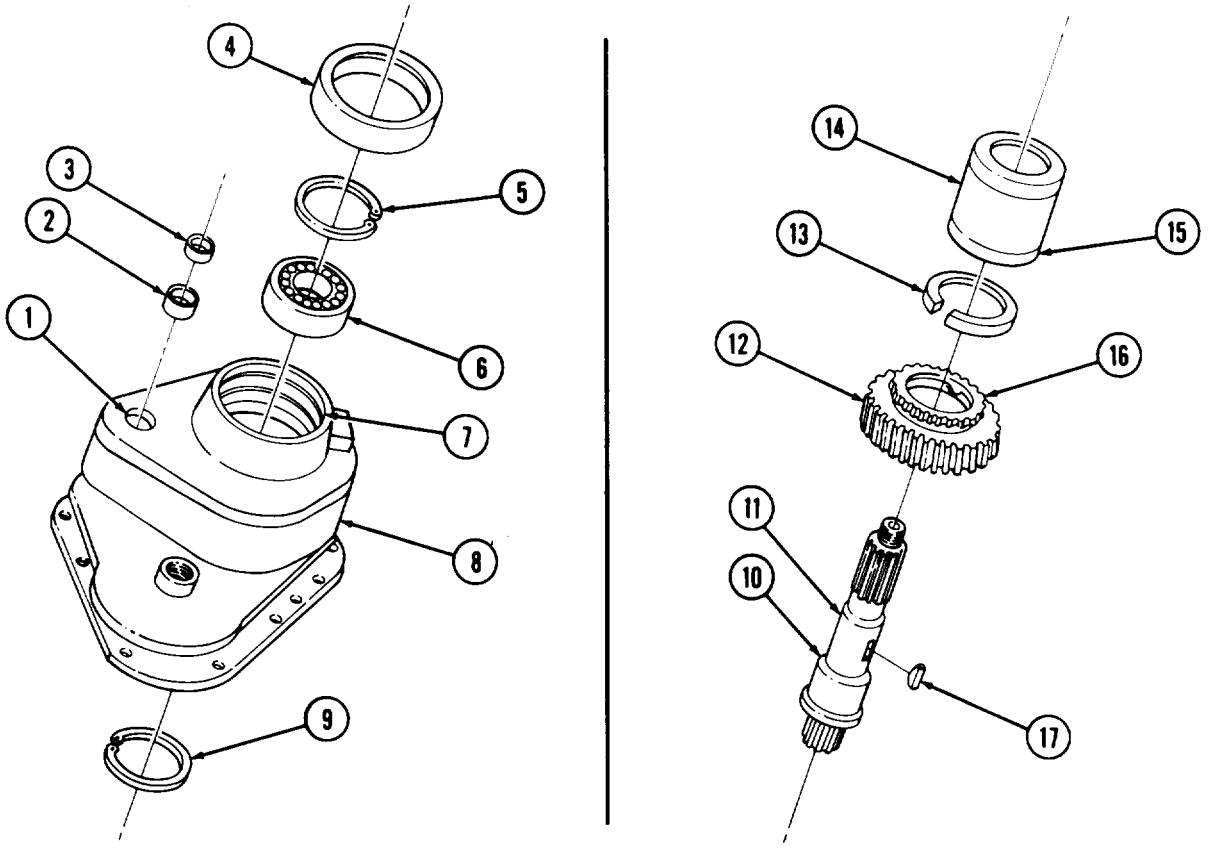

9-4. TRANSFER REPAIR (Contd)

NOTE

- Correct positioning of sprags is stamped on edge of sprag race. Both front and rear sprag races are assembled the same.
- Coat all parts with OE/HDO 80/90 before assembly.

18. Place one outer sprag race and gear (23) on flat surface with open face up.
19. Lay one spring (20) inside sprag cavity on bottom of sprag race and gear (23).
20. Position forty-one sprags (18) with lower notches (22) over spring (20) in sprag race and gear (23). Ensure all sprags (18) are at same height.
21. Carefully install second spring (20) in upper, notches (21) of sprags (18). Recheck that all sprags (18) are at same height and points (19) face clockwise.
22. Repeat steps 18 through 21 for second outer sprag race and gear (23).
23. Place front output shaft (27) in soft-jawed vise with threaded end up. Ensure that lower snap-ring (28) is firmly seated in groove on inner sprag race (26).
24. Place retaining washer (24) on top of rear sprag race (25) and install on inner sprag race (26), turning clockwise as it passes over inner sprag race (26). Rear sprag race (25) must seat against lower snapring (28) in inner sprag race (26).

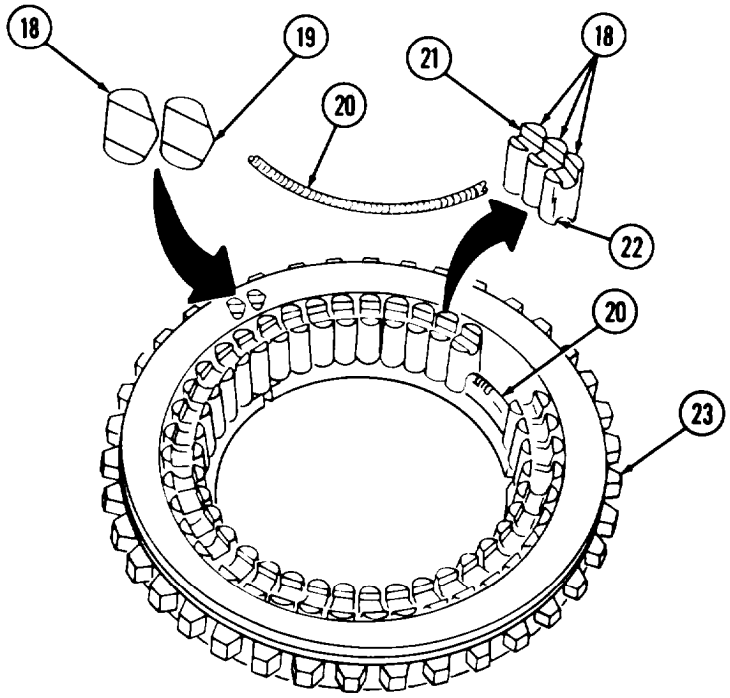

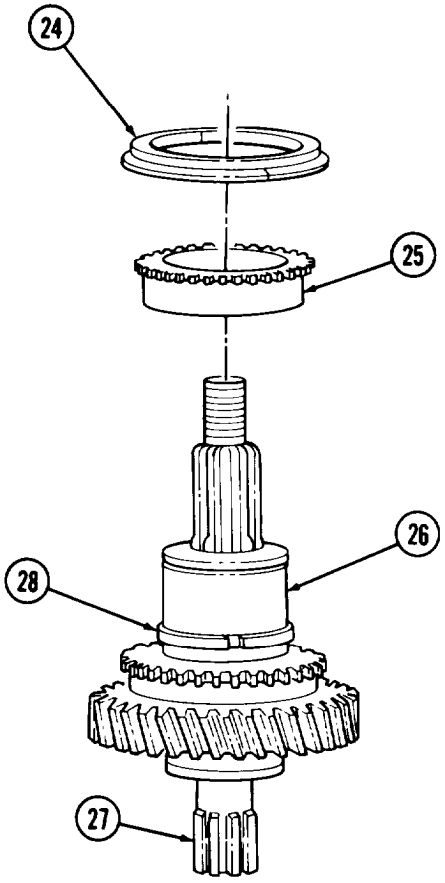

9-4. TRANSFER REPAIR (Contd)

25. Remove retaining washer (5) from rear sprag race (3) and place on top of front sprag race (1). Holding together, turn retaining washer (5) and front sprag race (1).
26. Place front sprag race (1) and retaining washer (5) over inner sprag race (2) turning counter-clockwise as it passes over inner sprag race (2). The retaining washer (5) fits between front (4) and rear (3) sprag races.
27. Check that thin flange of retaining washer (5) is in contact with edges of front (1) and rear (3) sprag races. Any gap indicates a sprag is not correctly seated.
28. Install second snapring (6) in upper groove of inner sprag race (2).
29. Place sprag shifter shaft (8) in clutch fork (7) alining screw hole (12) of clutch fork (7) with screw hole (9) in sprag shifter shaft. (8).
30. Instill setscrew (10) in hole (9) of clutch fork (7) and into hole (9) in sprag shifter shaft (8). Tighten setscrew (10) 45-57 lb-ft (61-77 N•m).
31. Install new safety wire (11) through setscrew (10), wrap safety wire (11) around sprag shifter shaft (8), twist ends together, and cut off excess safety wire (11).
32. Bend twisted ends of new safety wire (11) to clear clutch fork (7) and around front of sprag shifter shaft (8).

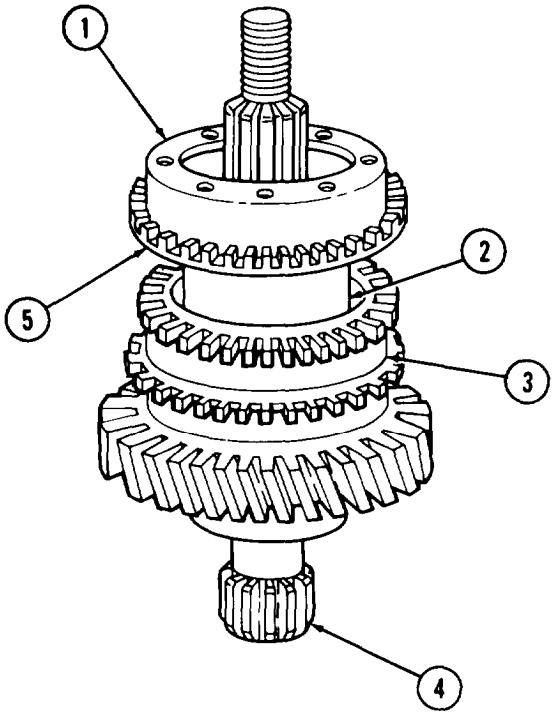

9-4. TRANSFER REPAIR (Contd)

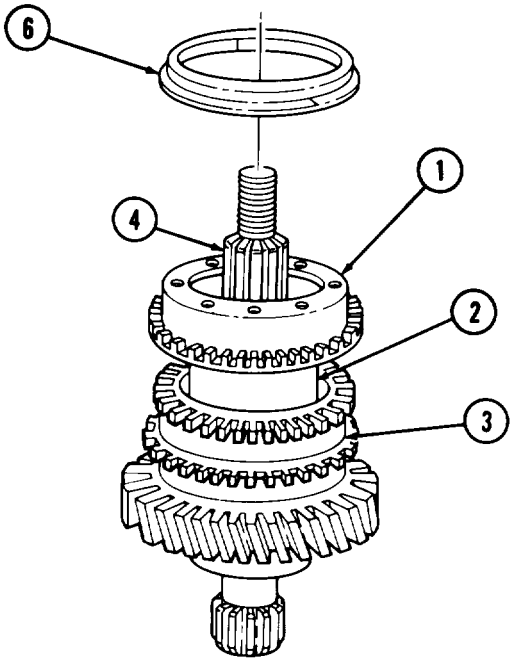

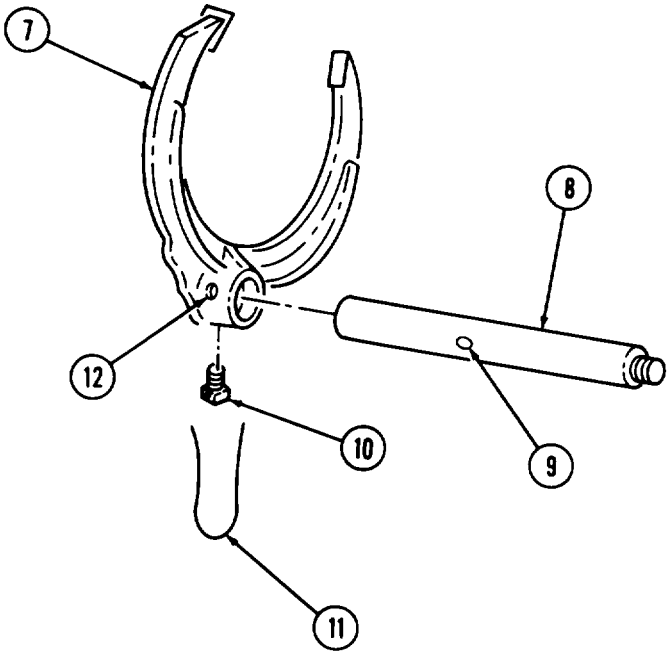

9-4. TRANSFER REPAIR (Contd)

33. Aline teeth of sprag races (2) with teeth of shift gear (8) and install shift gear (8) over sprag races (2) and mating teeth of driven gear (1). Ensure groove of shift gear (8) is toward threaded end of front output shaft (3).

34. Place collar (7) over threaded end of front output shaft (3).

NOTE

Assistant will help with steps 35 through 37.

35. Position front output shaft cover (6) on arbor press with open end up.

36. Place clutch fork (4) in groove in shift gear (8) and place front output shaft (3) and sprag shifter shaft (5) in front of output shaft cover (6) alining front output shaft (3) in bearing (10) and sprag shifter shaft (5) with seal in bore (9).

37. Holding collar (7) in place on front output shaft (3), press front output shaft (3) through bearing (10). Ensure collar (7) passes over inner snapring retaining bearing (10).

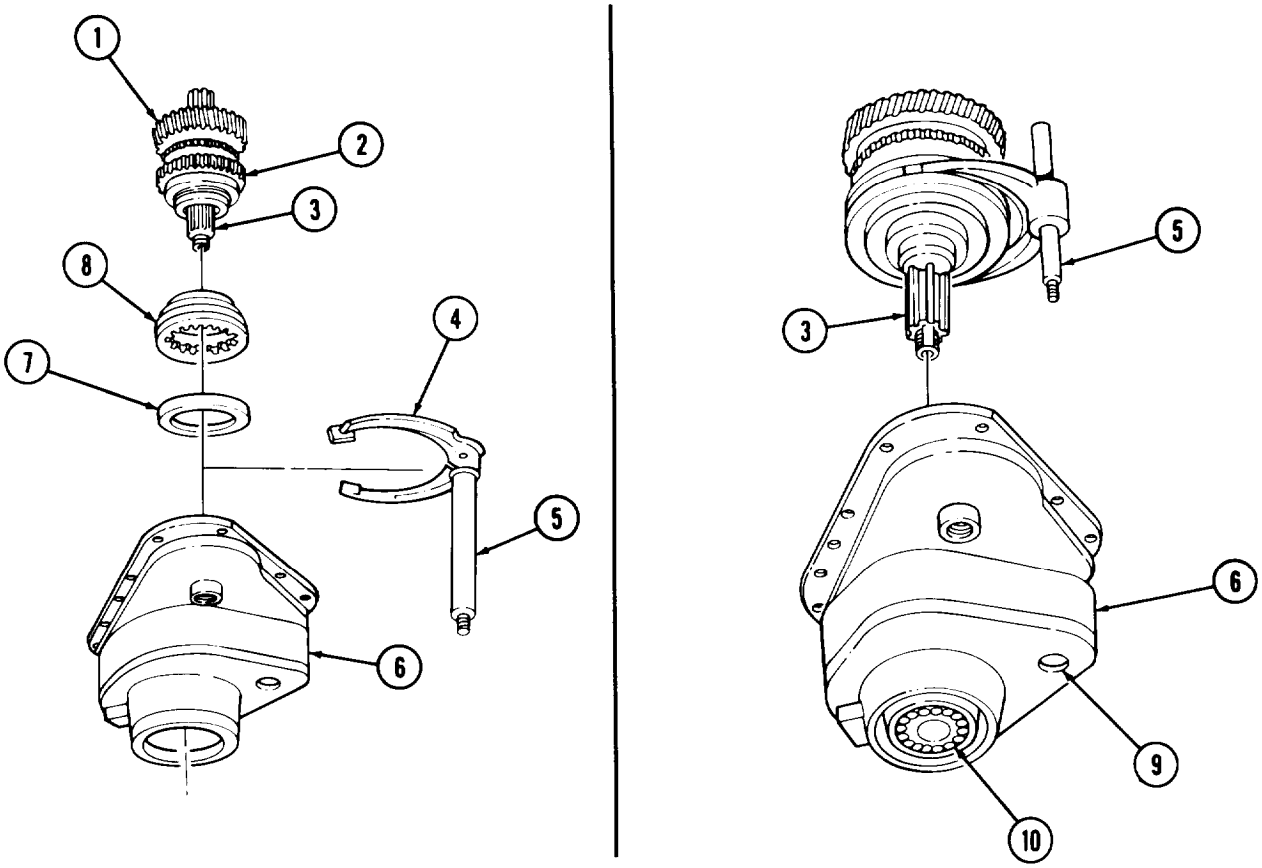

9-4. TRANSFER REPAIR (Contd)

38. Install two new seals (15) on piston (14) with lips of seals (15) toward outer ends of piston (14).
39. Coat both sides of gasket (17) with sealing compound and position in recess (18) on front of output shaft cover (9).
40. Install washer (16) and piston (14) on sprag shifter shaft (8) with washer (13) and new locknut (12). Tighten locknut (12) 43-61 lb-ft (58-83 N•m).
41. Coat inner bore of cylinder (23) with light coat of lubricating oil and carefully slide over seals (15) on piston (14).
42. Coat both sides of gasket (24) with sealing compound and seat gasket (24) on cover (22).
43. Place cover (22) on cylinder (23) with air port (25) up and install cover (22) on cylinder (23) and front output shaft cover (9) with four new tab lockwashers (26) and screws (19). Do not tighten screws (19).
44. Bend long tabs (20) over comers of cover (22) and tighten screws (19) alternately 6-10 lb-ft (8-14 N•m). Bend middle tab (21) of each tab lockwasher (26) over a flat on screws (19). Loosen screws (19), as necessary, to aline hex flat of screws (19) with middle tab (21).

NOTE

Coat bearings with gear oil before installation.

45. Press two bearings (28) and spacer (31) into HI-speed gear (30). Shields on bearings (28) face out from HI-speed gear (30).
46. Position HI-speed gear (30) and bearings (28) on arbor press, with HI-speed gear (30) extension (29) up, and press end (32) of input shaft (27) through bearings (28). Seat inner bearing (28) to shoulder (33) of input shaft (27) by splines.

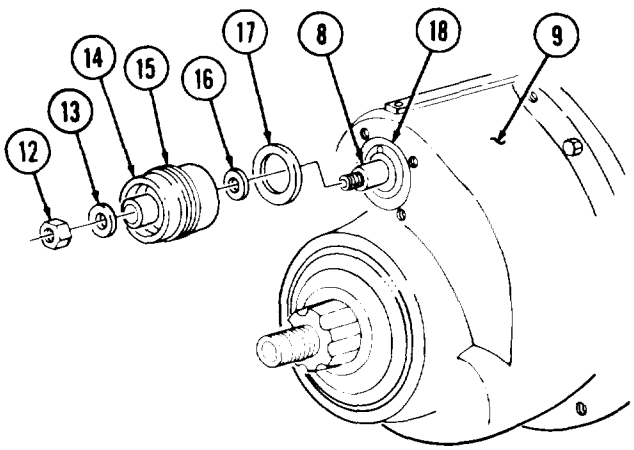

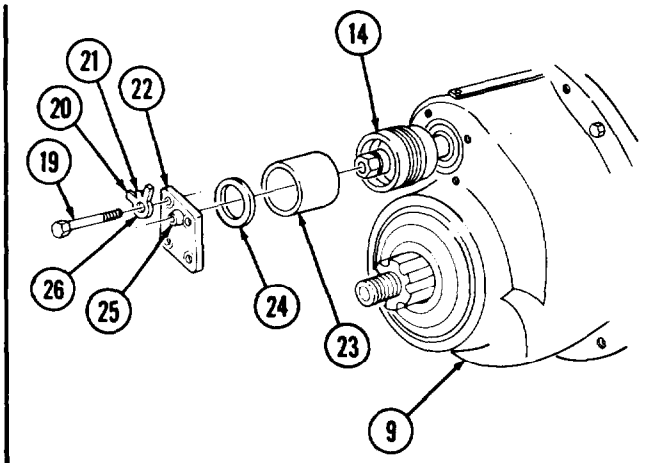

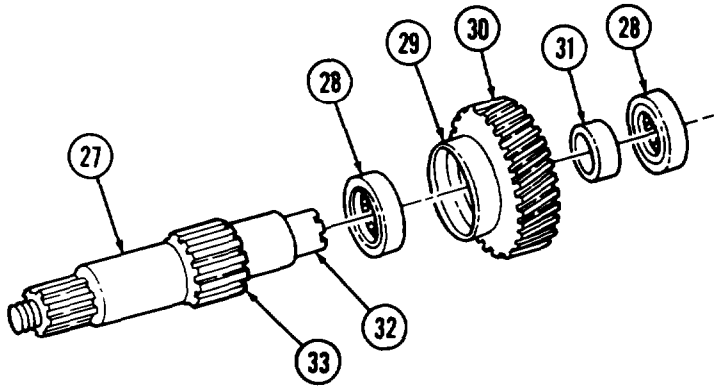

9-4. TRANSFER REPAIR (Contd)

47. Position washer (3) over input shaft (1) and seat against bearing in gear (2).
48. pressing on inner race of bearing (4), press bearing (4) on input shaft (1) until bearing (4) clears groove on input shaft (1).
49. Install retaining ring (5) in groove of input shaft (1). Ensure retaining ring (5) fully seats in groove.
50. Press bearings (10) and (6) and spacer (7) into LO-speed gear (8). Seals of bearings (10) and (6) face out horn gear (8).
51. Slide synchronizer (11) over input shaft (1) and on splines (12).
52. Place input shaft (1) and synchronizer (11) on arbor press and press LO-speed gear (8) onto input shaft (1), with LO-speed gear extension (9) toward synchronizer (10 Seat bearing (10 to shoulder (13) on input shaft(1) by splines (12).

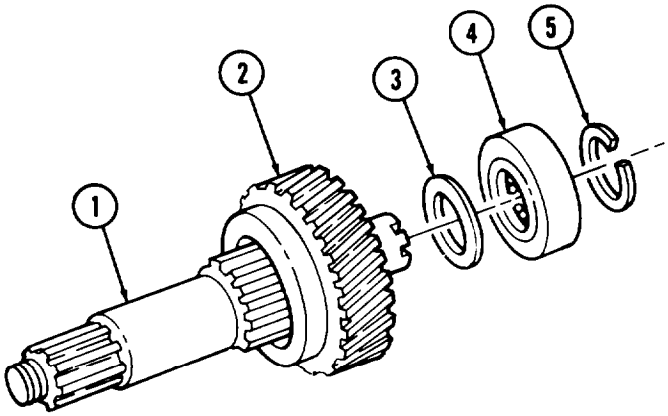

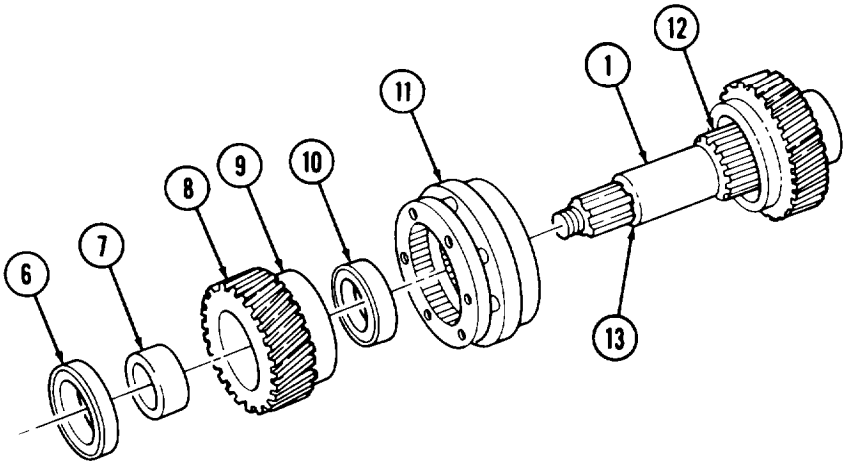

9-4. TRANSFER REPAIR (Contd)

53. Install new woodruff keys (15) and (17) in intermediate shaft (16). Ensure there are no burrs on woodruff keys (15) and (17) after installation.
54. Position HI-speed intermediate gear (18) on arbor press with flat side up.
55. Position intermediate shaft (16) with splined end up over HI-speed intermediate gear (18), aline woodruff key (17) with keyway, and press intermediate shaft (16) into HI-speed intermediate gear (18) to shoulder on intermediate shaft (16).
56. Position LO-speed intermediate gear (14) in arbor press with flat side up.
57. Position intermediate shaft (16) with splined end down over LO-speed intermediate gear (14), aline woodruff key (15) with keyway, and press intermediate shaft (16) into LO-speed gear (14) to shoulder on intermediate shaft (16).
58. Press two tmered roller bearings (19) on intermediate shaft (16), seating inner race of bearings (19) against gears (14) and (18).

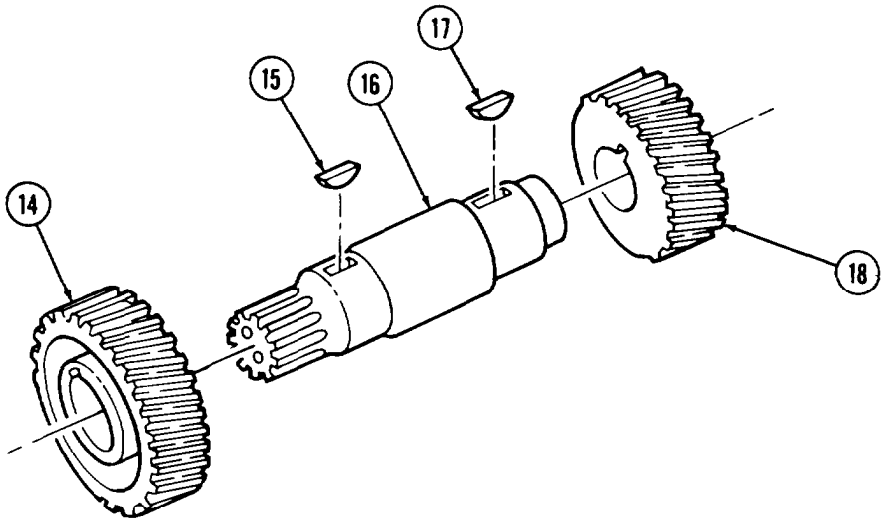

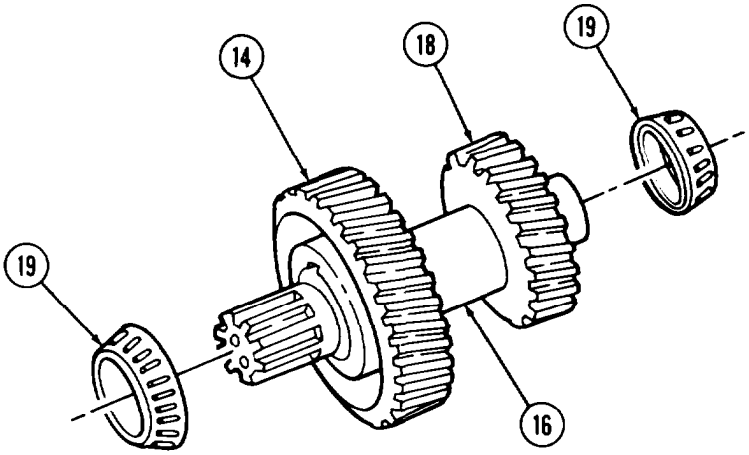

9-4. TRANSFER REPAIR (Contd)

59. Install new woodruff key (3) in rear output shaft (2). Ensure there are no burrs on woodruff key (3) after installation.
60. Position gear (4) on arbor press with flat side down.
61. Position rear output shaft (2) over gear (4), aline woodruff key (3) with keyway.
62. Using bearing cone adapter, press rear output shaft (2) into gear (4). Seat gear (4) to shoulder of rear output shaft (2).
63. Press tapered roller bearings (1) and (5) onto rear output shaft (2) with small diameter of bearings (1) and (5) facing away from gear (4). Bearing (1) seats against shoulder (6) and bearing (5) seats against gear (4).
64. Position fork (12) on collar (9) of synchronizer (10).
65. While holding fork (12) on collar (9), set input shaft (8) in housing (16) alining ball bearing (11) with bore (15) of housing (16). Seat ball bearing (11) in bore (15) by tapping input shaft (8) with soft-head hammer. Ball bearing (11) should be seated just above inside lip of housing (16).
66. Aline setscrew hole (14) in range shifter shaft (7) with setscrew hole (13) in fork (12) and slide range shifter shaft (7) through fork (12) and into bore (17) of housing (15). Stop range shifter shaft (7) when setscrew holes (14) and (13) are alined.
67. Install setscrew (23) in fork (12) and range shifter shaft (7). Tighten setscrew (23) 115-120 lb-ft (156-163 N•m).
68. Working inside housing (16), pass new safety wire (24) through head of setscrew (23), around nose of fork (12), and twist ends of safety wire (24) together. Cut off excess safety wire (24) and bend twisted end flat over fork (12).
69. Install new ball bearing (18), plunger (19), spring (20), new lockwasher (22), and detent screw (21) in housing (16).
70. Set bearing (26) on intermediate shaft (25) in bore of housing (16) with intermediate gears (27) and (28) in mesh with gears of input shaft (8).
71. Set bearing (5) on lower end of rear output shaft (2) in bore of housing (16) with gear (4) in mesh with gear (27) on intermediate shaft (25).

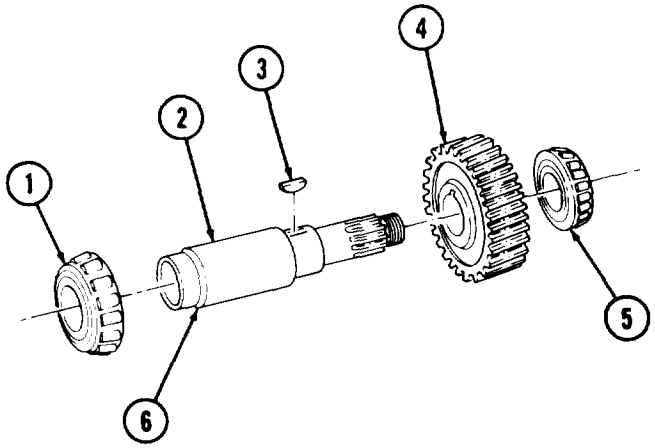

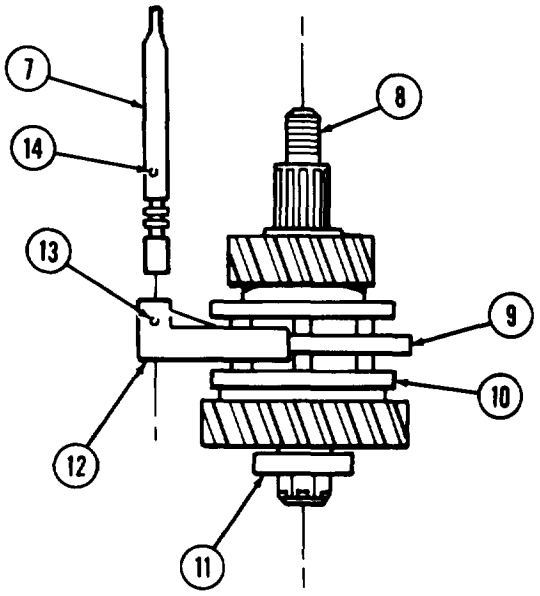

9-4. TRANSFER REPAIR (Contd)

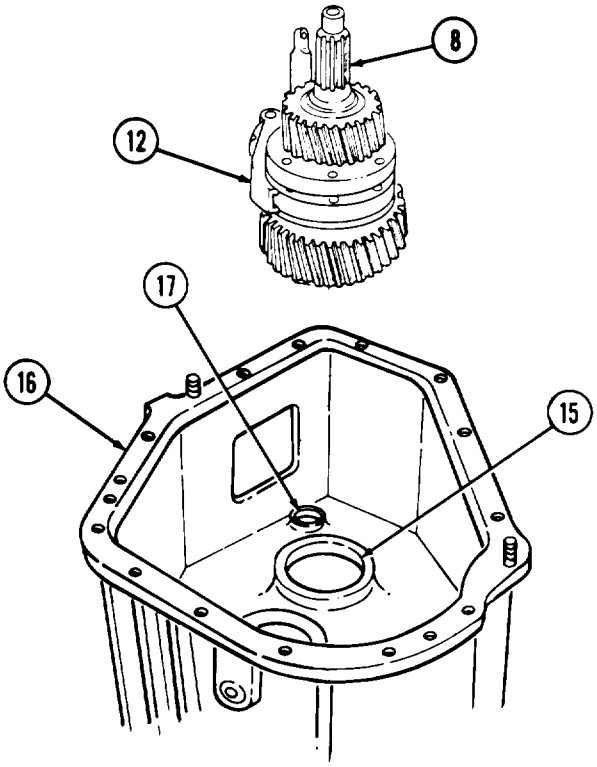

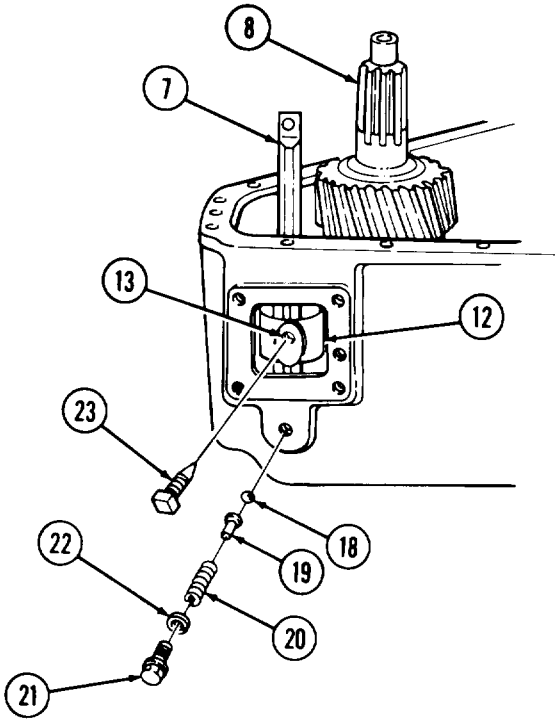

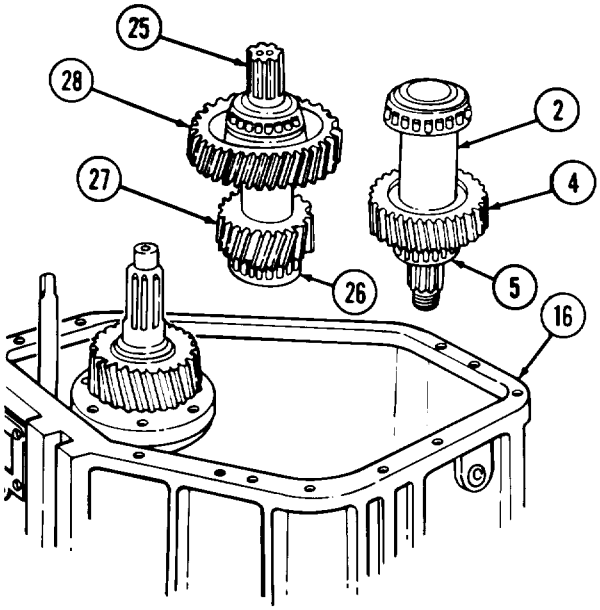

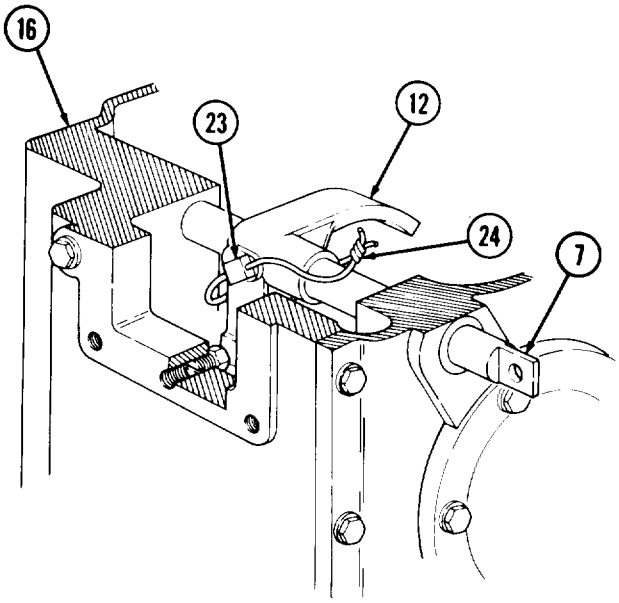

9-4. TRANSFER REPAIR (Contd)

72. Coat housing flange (9) with light coat of sealing compound.
73. Position new gasket (10) on housing flange (9) and coat gasket (10) with sealing compound.
74. Attach chains to lifting device and to front cover (5) with three washers (4) and screws (3). Screws (3) are set in three holes of front cover (5).

NOTE

Assistant will help with step 75.

75. Position front cover (5) over housing (7) alining front cover (5) over range shifter shaft (8), input shaft (1), intermediate shaft (2), and three alinement pins (6). Start front cover (5) on housing (7).
76. Remove three screws (3), washers (4), and chains from front cover (5).
77. Using a soft-head hammer, tap around front cover (5) to seat front cover (5) on housing (7).
78. Install front cover (5) on housing (7) with fifteen screws (18), new lockwashers (17), and nuts (16). Finger tighten screws (18).
79. Install new lockwasher (14) and screw (15) on front cover (5) and housing (7). Finger tighten screw (15).
80. Install six screws (13), new lockwashers (12), and nuts (11) on front cover (5) and lousing (7). Finger tighten screws (13).
81. Tighten screws (18), (15), and (13) alternately 40-55 lb-ft (54-75 N•m).
82. Place collar (25) over input shaft, (1) and seat against gear inside front cover (5).
83. Install snapring (23) in groove on bearing (24) if removed, and install bearing (24) over input shaft (1) and seat in front cover (5) as deep as snapring (23) will permit.
84. Apply light coat of sealing compound to new gasket (19) and place gasket (19) over input shaft (1) and aline on front cover (5).
85. Install bearing retainer (20) on front cover (5) with six new lockwashers (21) and screws (22). Tighten screws (22) 40-55 lb-ft (54-75 N•m).

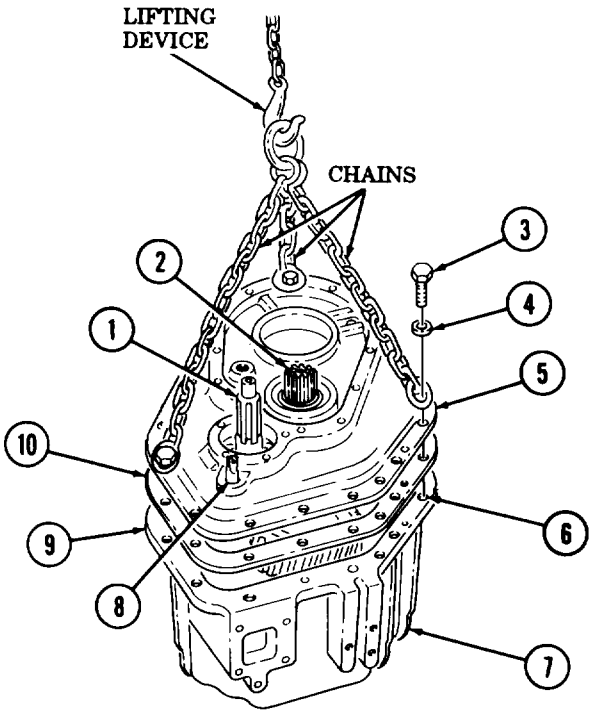

9-4. TRANSFER REPAIR (Contd)

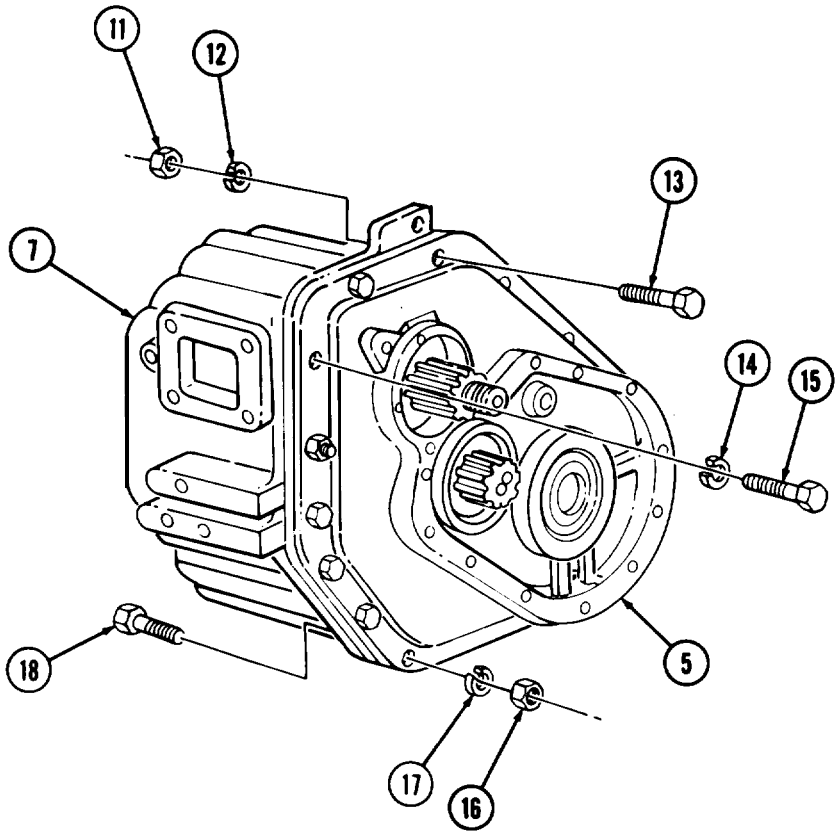

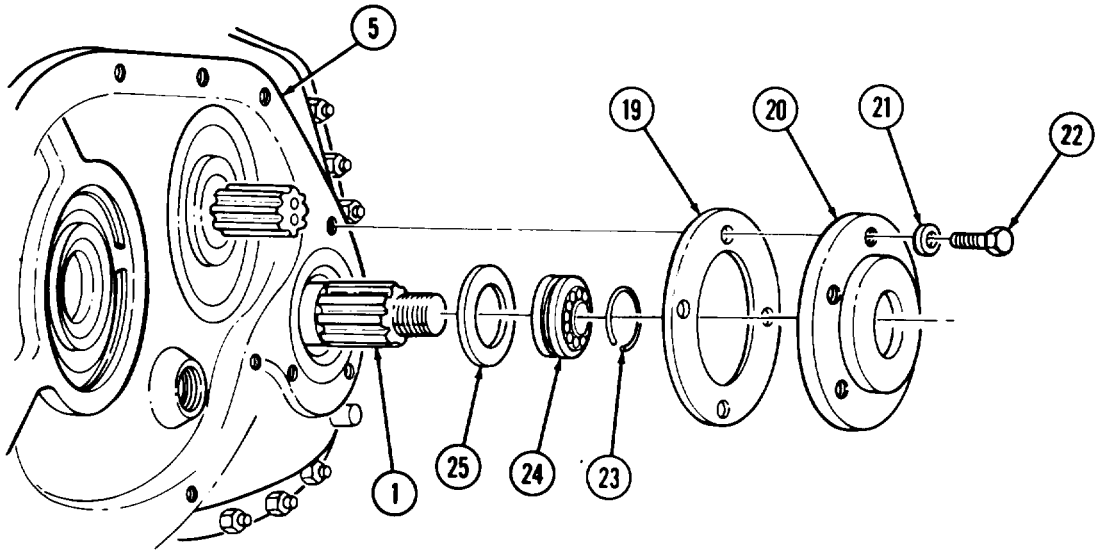

9-4. TRANSFER REPAIR (Contd)

86. Install drive gear (2), flat face out, on intermediate shaft (1).
87. Aline screw holes in plate (3) and new locktab washer (4) with screw holes in intermediate shaft (1) and install with two screws (5). Tighten screws (5) 45-55 lb-ft (61-75 N•m).
88. Bend four comer tabs (6) over flats of two screws (5).

NOTE

Step 89 uses an adjusting fixture to set intermediate shaft end play. Step 90 is an alternate method.

89. Set intermediate shaft (1) end free play using adjusting fixture.

NOTE

Perform step a. if plate is on shaft.

a. Bend tabs on locktab washer (4) away from heads of screws (5) and remove two screws (5), locktab washer (4), and plate (3) from intermediate shaft (1). Discard locktab washer (4).
b. Install a 0.030 in. (0.76 mm) shim pack (8) and adjusting fixture over intermediate shaft (1) and on housing (7) with four washers (9) and screws (10). Tighten screws (10) alternately 20-30 lb-ft (27-41 N•m).
c. Thread two adjusting screws into two holes in intermediate shaft (1).
d. Back off nuts (12) and tighten nuts (11) on fixture to ensure front bearing on intermediate shall (1) is seated. Tighten nuts (11) 15-20 ft-lb (20-27 N•m).
e. Back off nuts (11) and tighten nuts (12) on fixture to seat rear bearing on intermediate shaft (1). Tighten nuts (12) one turn past first resistance.
f. Install dial indicator to end of one adjusting screw and zero dial indicator.
g. Back off nuts (11) and evenly tighten nuts (12) until firm resistance is felt. Read and record end movement of adjusting screw from dial indicator.
h. Back off nuts (11) and (12) as necessary to unthread adjusting screws from intermediate shaft (1).
i. Remove four screws (10), washers (9), adjusting fixture, and shim pack (8) from housing (7).
j. Using depth micrometer, measure height of lip (15) on adjusting fixture and height of lip (13) on cover (14). In each case make measurements at three points around lip and record average of the three measured heights.
k. Subtract smaller lip height (13) or (15) from larger. Record value as “D.”
l. If adjusting fixture lip (15) height is larger, subtract “D from shim pack (8) thickness value (0.030 in. (0.76 mm) - “D”). If cover lip (13) height is larger, add “D” to shim pack (8) thickness value (0.030 in. (0.76 mm) + “D”). In either case, record result as “A.”
m. Take value of intermediate shaft (1) movement in step g. and subtract 0.003 in. (0.08 mm) from it. Record result as “B.”
n. Subtract “B” from “A.” The result is the final shim pack (8) thickness for assembly.

9-4. TRANSFER REPAIR (Contd)

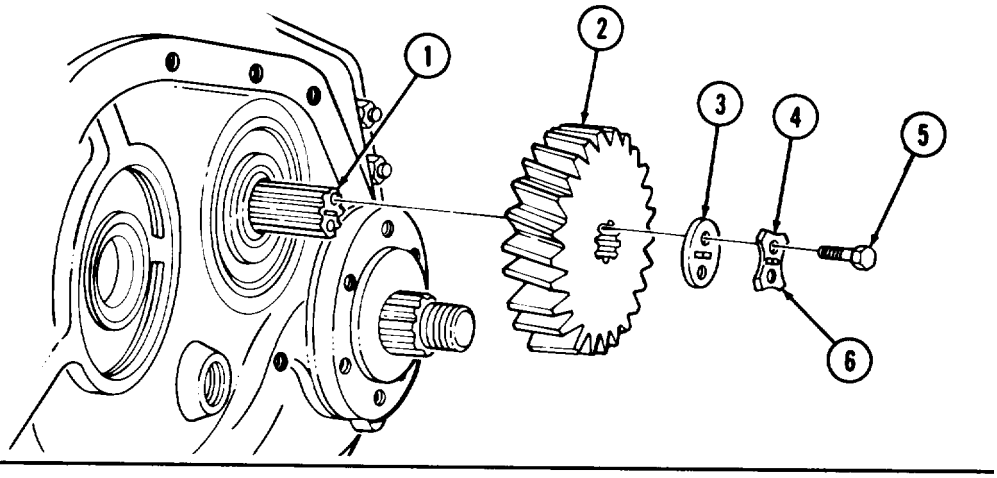

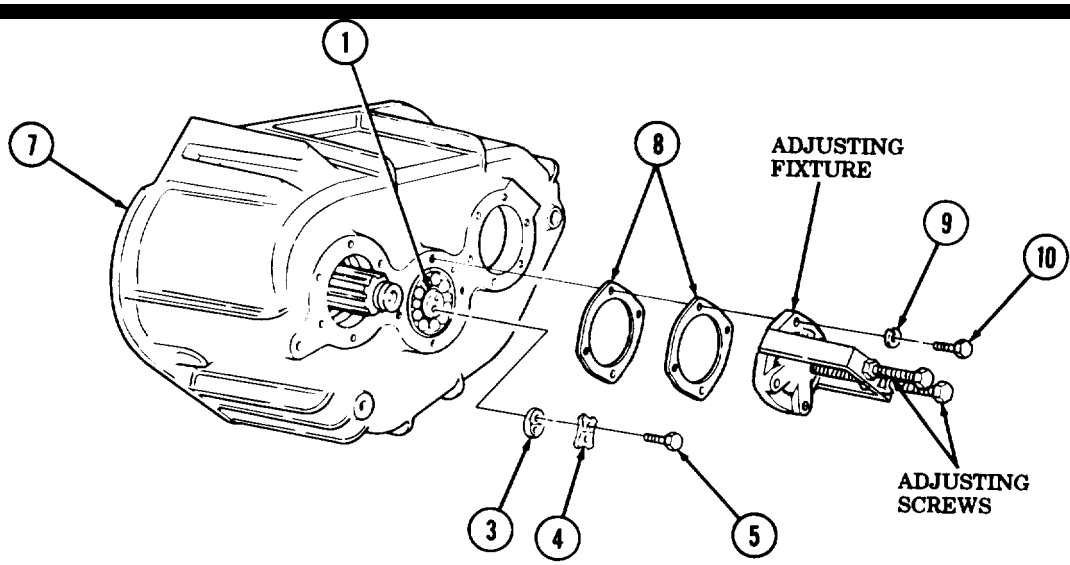

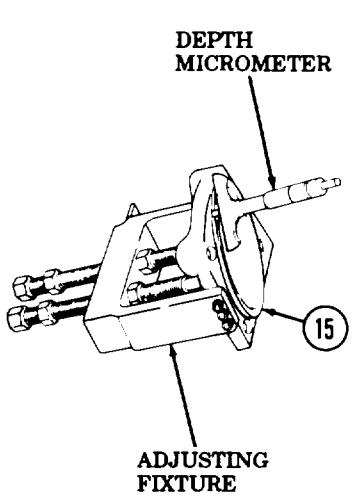

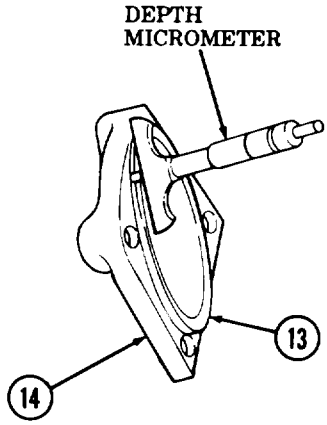

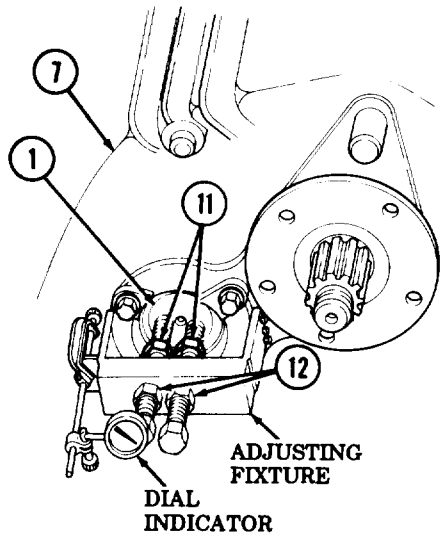

9-4. TRANSFER REPAIR (Contd)

90. Set intermediate shaft (2) end free play using feeler gage.
    a. Install cover (4) on housing (1) with four washers (5) and screws (6). Finger tighten screws (6) evenly. Cover (4) should be clear of housing (1).
    b. Seat both bearings and races by tapping on cover (4) with soft-head hammer.
    c. Evenly tighten screws (6) 20-30 lb-ft (27-41 N•m).
    d. Using feeler gage, measure gap (11) between cover (4) and housing (1) at three points around cover (4). Average three readings.
    e. Add 0.003 in. (0.08 mm) to reading from step d. above. This is the shim pack (3) thickness to be installed.
    f. Remove four screws (6), washers (5), and cover (4) from housing (1).

NOTE

Perform step g. if plates are not on shaft.

    g. Install plate (10) and new locktab washer (8) on rear of intermediate shaft (2) with two screws (7). Tighten screws (7) 60-80 lb-ft (81-108 N•m). Bend tabs (9) of locktab washer (8) over screws (7).

NOTE

Step 91 uses an adjusting fixture to set output shaft end play.
Step 92 is an alternate method.

91. Set rear output shaft (12) end free play using adusting fixture.
    a. Position 0.030 in. (0.76 mm) shim pack (13) and adjusting fixture over rear output shaft (12) and on housing (1) with six washers (15) and screws (14). Tighten screws (14) 40-55 lb-ft (54-75 N•m).
    b. Turning adjusting screw, thread nut (16) onto output shaft (12). Loosen nut (18) as necessary. Tighten nut (16) 30-40 lb-ft (41-54 N•m).
    c. Tighten front nut (17) 15-20 Ib-ft (20-27 N•m) to seat front bearing on rear output shaft (12).
    d. Back off front nut (17) and tighten rear nut (18) 15-20 lb-ft (20-27 N•m) to seat rear bearing on rear output shaft (12).
    e. Back off rear nut (18) and tighten front nut (17) until resistance is felt.
    f. Install dial indicator on adjusting fixture to read end movement of adjusting screw. Zero dial indicator.

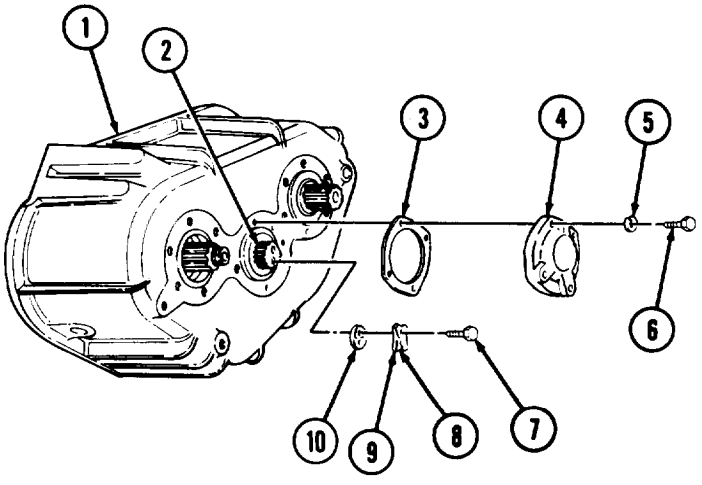

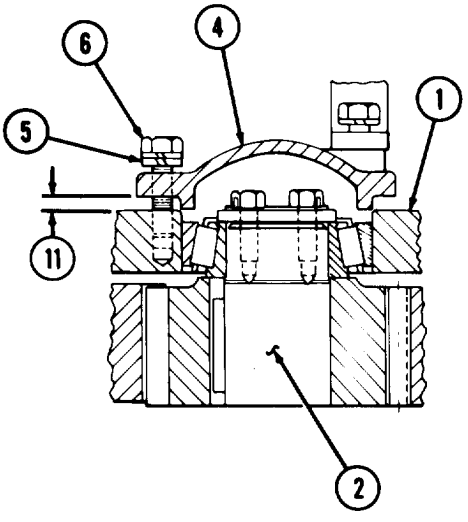

9-4. TRANSFER REPAIR (Contd)

g. Back off front nut (17) and tighten rear nut (18) until resistance is felt. Record rear output shaft (12) end play as measured by dial indicator as movement of adjusting screw.

h. Back off front nut (17), turn adusting screw and remove nut (16) from rear output shaft (12).

i. Remove six screws (14), washers (15), adjusting fixture and shim pack (13) from housing (1).

j. Measure height of lip (19) on adjusting fixture and height of lip (21) on cap (20). In each case make measurements at three places around lips and record average of the three measured heights.

k. Subtract the smaller of (19) or (21) from the larger. Record result as "D."

l. If adjusting fixture lip height (19) is larger, add "D" to shim pack (13) thickness value (0.030 in. (0.76 mm) + "D"). If cap and seal lip (21) height is larger, subtract "D" from shim pack (13) thickness value (0.030 in. (0.76 mm) -"D". In either case, record result as "A."

m. Take measurement from dial indicator in step g. and subtract 0.003 in. (0.08 mm) from it. Record result as "B."

n. Resulting final shim pack (13) thickness for installation is "A" - "B," which will allow 0.002-0.005 in. (0.05-0. 13 mm) rear output shaft (12) end freeplay.

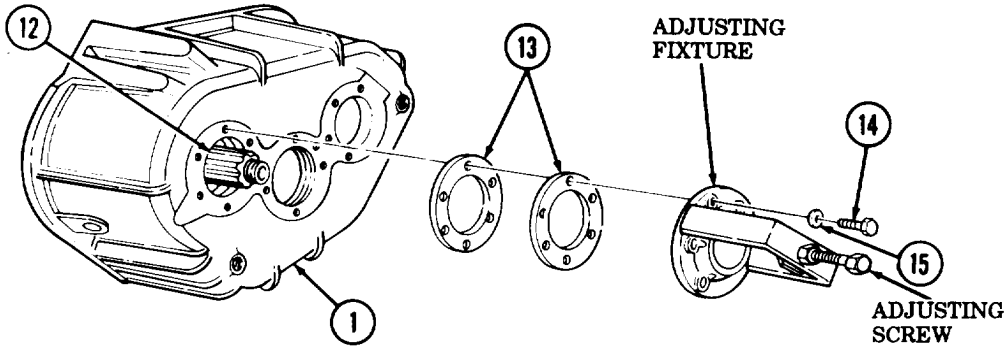

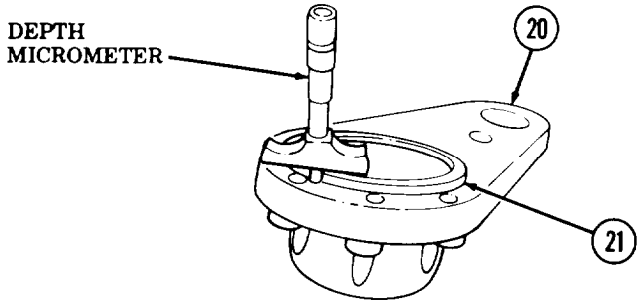

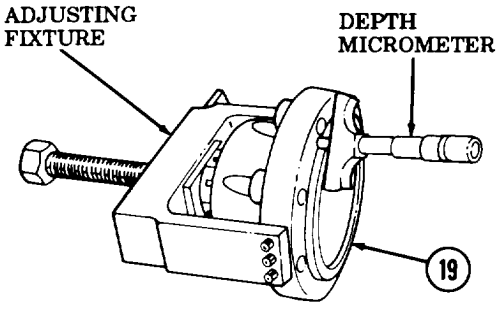

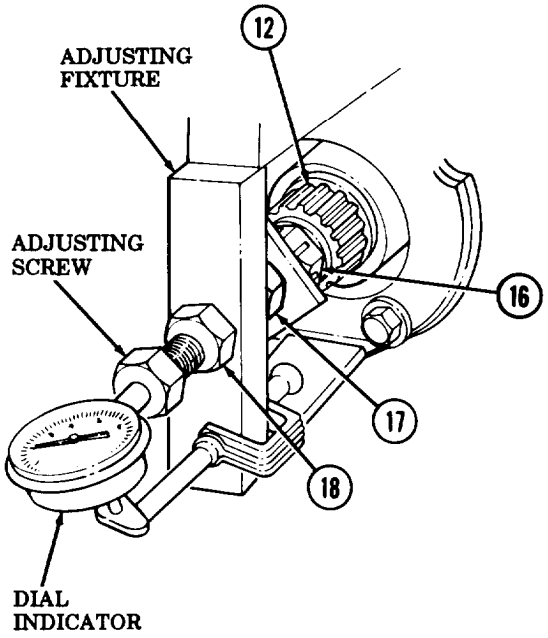

9-4. TRANSFER REPAIR (Contd)

92. Set rear output shaft (6) end free play using feeler gage.

a. Install cap (2) over rear output shaft (6) and on housing (1) with six washers (3) and screws (4). Tighten screws (4) evenly finger tight.

b. Seat rear bearing (8) and race (9) by tapping on seal and cap (1) with soft-head hammer.

c. Tighten screws (4) alternately 12-15 lb-ft (16-20 N•m). Then repeat tightening sequence for torque of 15-20 lb-ft (20-27 N•m).

d. Measure gap (7) between housing (1) and cap (2) at three points around circumference of contact surface. Average the three readings. Record average gap (7) value.

e. Add 0.003 in. (0.08 mm) to average gap (7). This is the final shim pack (5) thickness for assembly.

f. Remove six screws (4), washers (3), and cap (2) from housing (1).

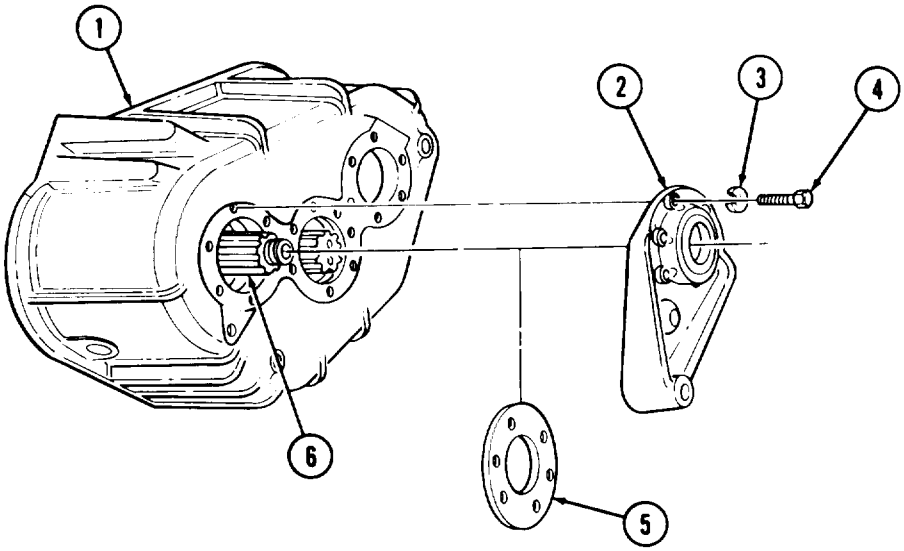

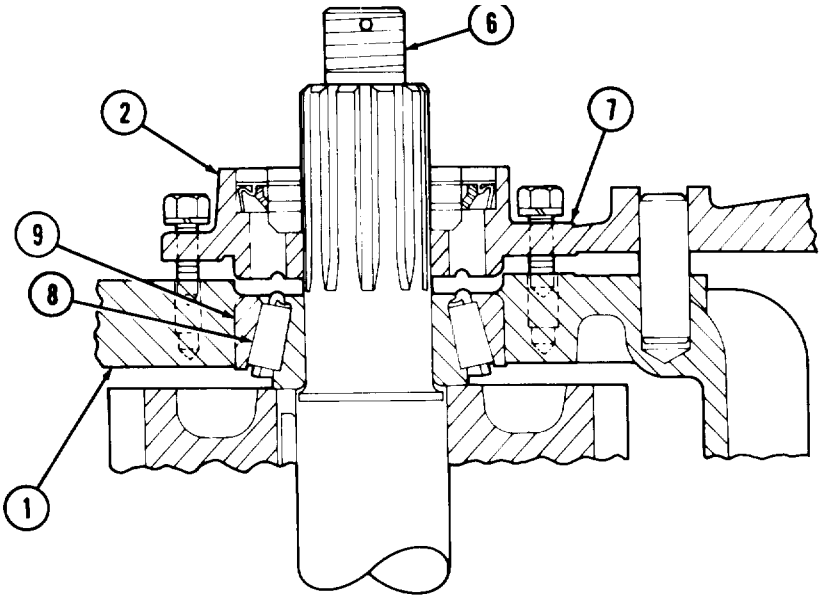

9-4. TRANSFER REPAIR (Contd)

93. Install front output flange (16) on front output shaft (17).

94. Coat lower side of new gasket (21) with thin coat of sealing compound and position on front cover (22).

95. Coat upper side of gasket (21) with thin coat of sealing compound.

NOTE

Assistant will help with steps 96 and 97.

96. Attach chain around flange (16) and lifting device and position front output shaft (17) over front cover (22), aline driven gear in front output shaft (17) with drive gear (23) and shaft of cylinder (12) with bore (25).

97. Lower front output shaft housing (20), alining dowels (28) with front output cover (20), and install on front cover (22) with ten new lock washers (19) and screws (18). Tighten screws (18) alternately 40-55 lb-ft (54-75 N•m).

98. Remove lifting device and chain from flange (16).

99. Install input flange (26) on input shaft (24) with washer (27), and nut (11). Tighten nut (11) 300-600 Ib-ft (407-814 N•m) and install new cotter pin (10).

100. Install washer (15) and nut (14) on rear output shaft (6) and front output shaft (17). Tighten nut (14) 300-600 lb-ft (407-814 N•m) and install new cotter pin (13).

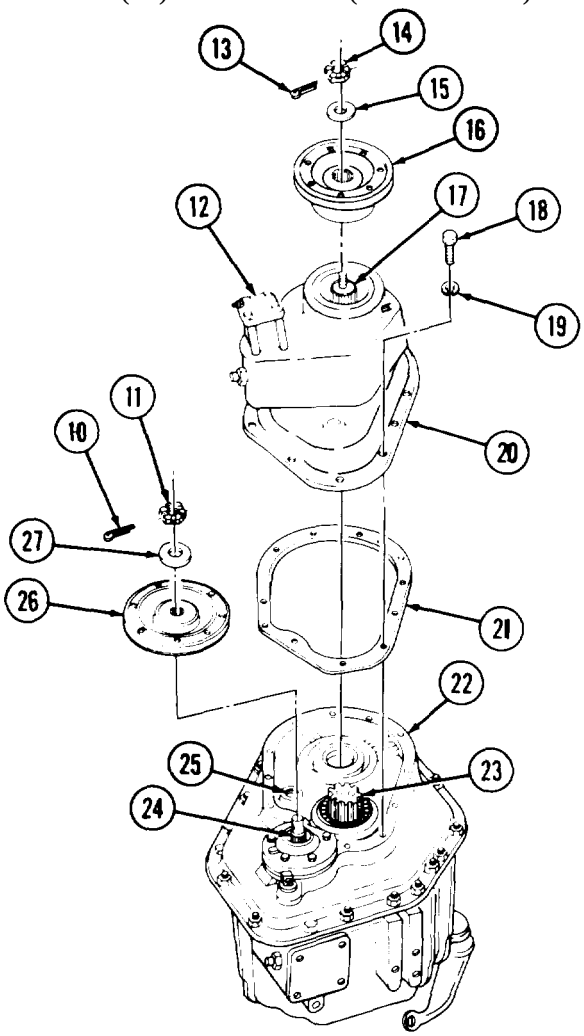

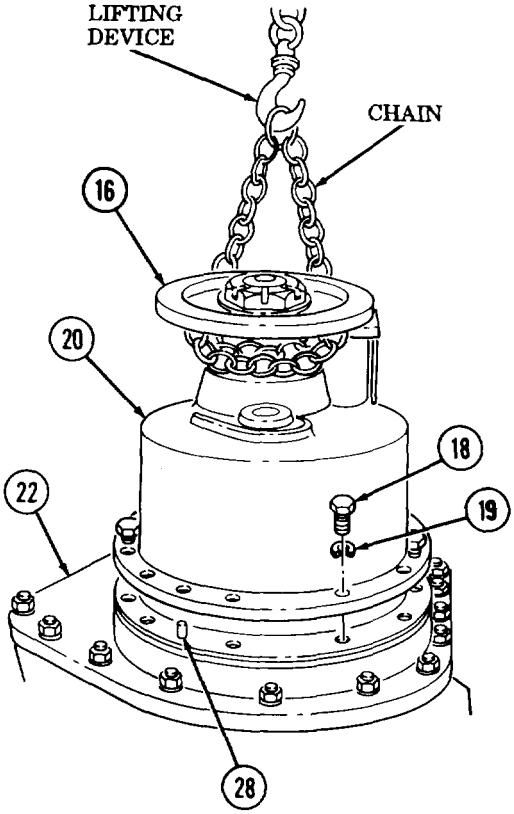

9-4. TRANSFER REPAIR (Contd)

NOTE

Perform steps 101 and 102 if plates are not on shaft.

101. Aline holes in plate (17) and new locktab washer (16) with intermediate shaft (2) and install with two screws (15). Tighten screws (15) 45-57 lb-ft (61-77 N•m).

102. Bend four tabs of locktab washer (16) over flats of two screws (15).

NOTE

Use shim pack thickness from step 89 or 90.

103. Coat front and back of shim pack (8) with thin coat of sealing compound and position shim pack (8) and cover (9) over intermediate shaft (2). Hold in place with two screws (11) installed finger tight in upper two screw holes on housing (1).

104. Install cover (9) and bracket (14) on housing (1) with two new lockwashers (13) and screws (12) in lower two holes. Tighten screws (12) finger tight.

105, Remove two upper screws (11) in cover (9) and position bracket (7) over cover (9). Install cover (9) and bracket (7) on housing (1) with two new lockwashers (10) and screws (11).

106. Alternately tighten four screws (11) and (12) 60-80 lb-ft (8 1-109 N•m).

NOTE

Use shim pack thickness from step 91 or 92.

107. Coat front and back of shim pack (25) with thin coat of sealing compound.

108. Position shim pack (25) and cap (24) over rear output shaft (26) and on housing (1) and install with six new lockwashers (23) and screws (22). Tighten *screws* (22) 40-55 lb-ft (54-75 N•m).

109. Install shield (27) and flange (28) on brakedrum (21) with six new locknuts (29).

110. Install brakedrum (21) on rear output shaft (26) with washer (20) and nut (19). Tighten nut (19) 300-400 lb-ft (407-542 N•m) and install new cotter pin (18).

111. Coat gasket (3) with thin coat of sealing compound and aline on housing (1).

112. Install cover (4) over gasket (3) on housing (1) with six new lockwashers (5) and screws (6). Tighten screws (6) 40-55 lb-ft (54-75 N•m).

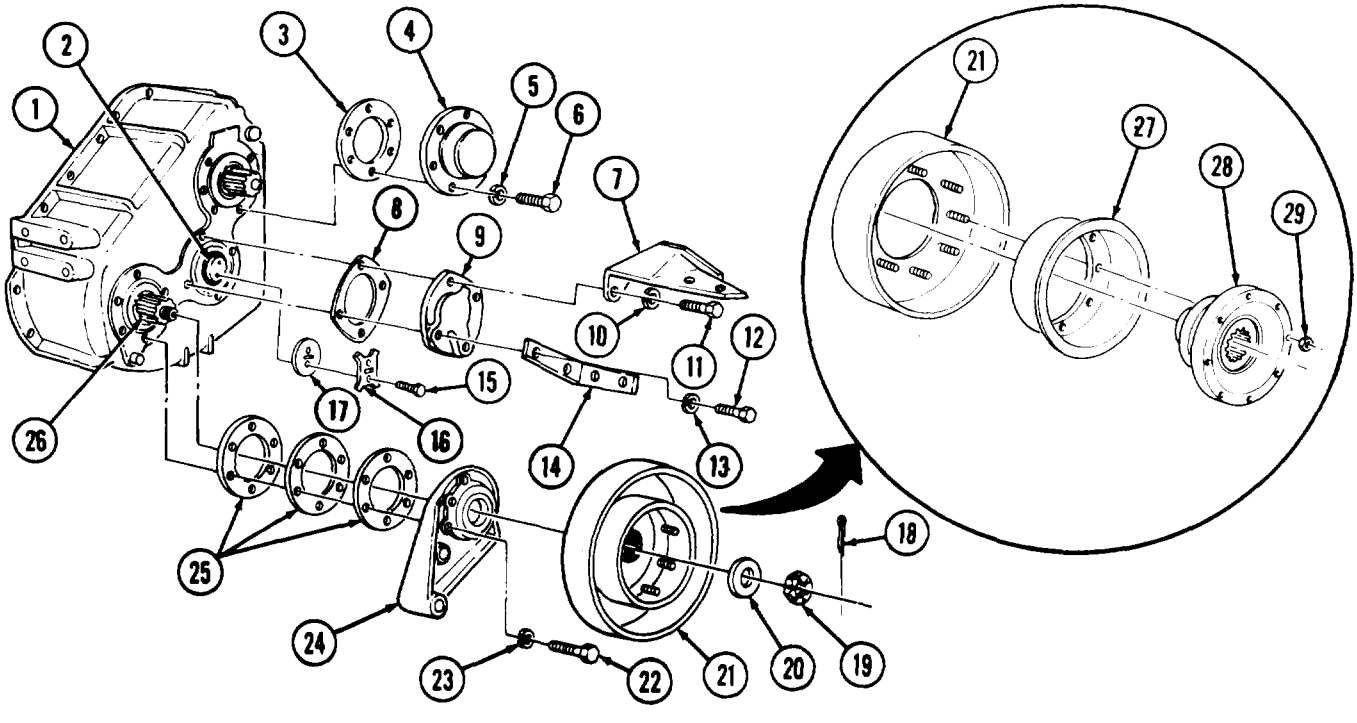

9-4. TRANSFER REPAIR (Contd)

NOTE

Perform steps 113 and 114 for M815 and M819 vehicles.

113. Install coupling (33) on input shaft (30) with setscrew (31).
114. Install new safety wire (32) on setscrew (31).

NOTE

Perform steps 115 through 118 for M815, M816, and M819 vehicles.

115. Install new gasket (34) and PTO (37) on housing (1) with two new lockwashers (39), nuts (38), four new lockwashers (35), and screws (36).
116. Install elbow (45) on housing (1).
117. Install two new sleeves (41) and tube (40) on elbow (45) and PTO (37).
118. Install clamp (44) and tube (40) on housing (1) with washer (43) and screw (42).

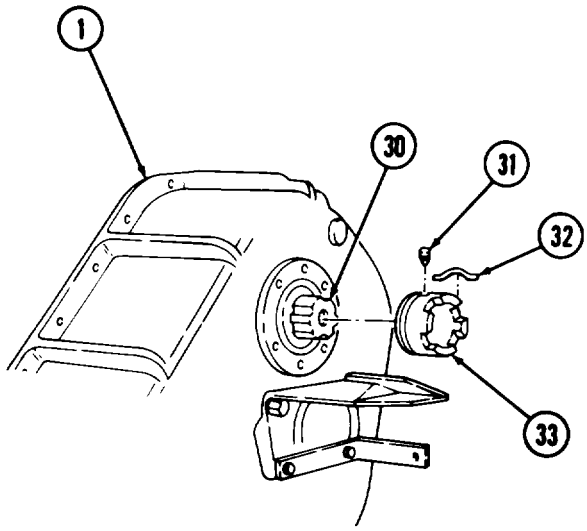

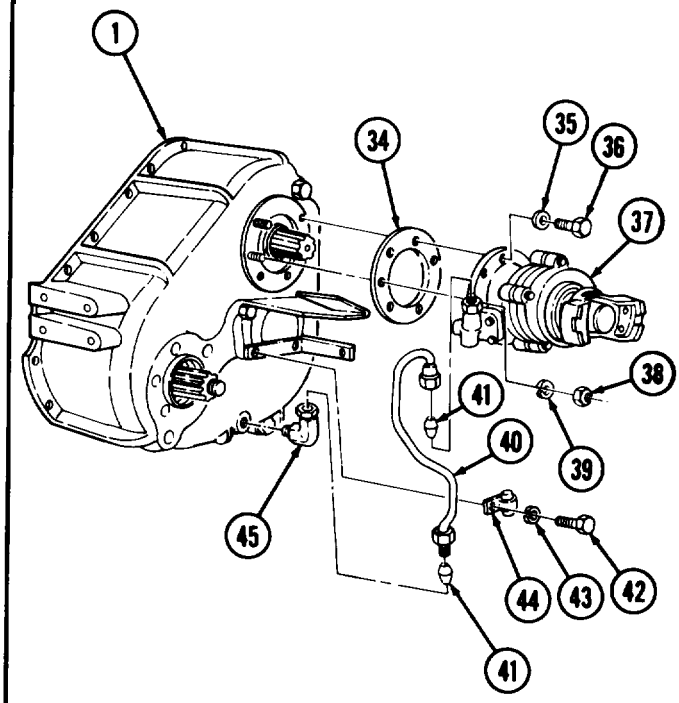

9-4. TRANSFER REPAIR (Contd)

119. Move shifter fork (7) under screw (8) and turn screw (8) until clearance between head of screw (8) and shifter fork (7) is 0.006-0.010 in. (0. 15-0.25 mm). Install setscrew (6) in bore (9) and tighten 5-15 lb-ft (7-20 N•m).

120. Coat contact surfaces of new gasket (4) with sealing compound and position gasket on housing (5).

121. Install gasket (4) and cover (3) on housing (5) with four new lockwashers (2) and screws (1). Tighten screws (1) 20-35 lb-ft (27-48 N•m).

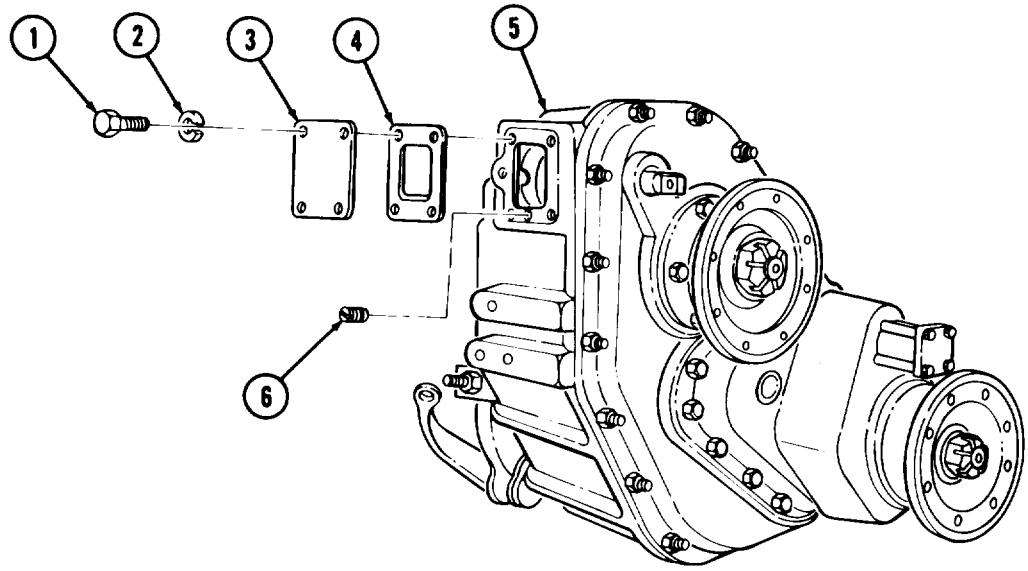

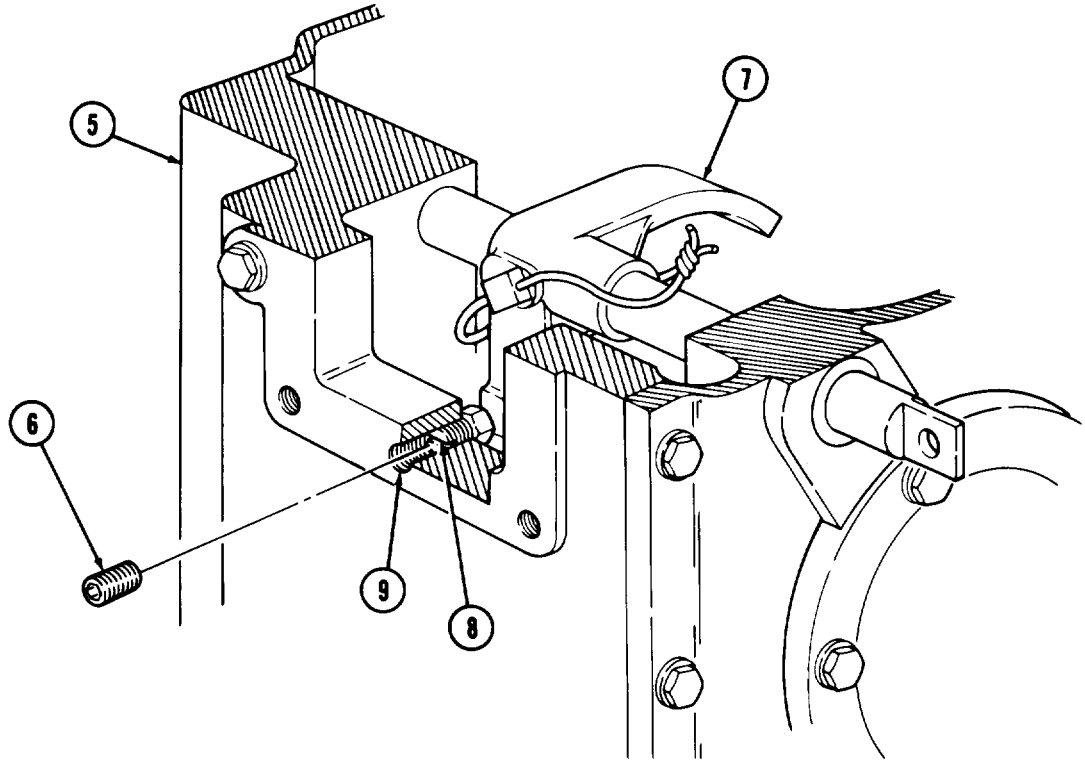

9-4. TRANSFER REPAIR (Contd)

122. Pass large flat end of adapter (22) through port (23), seat in front output shaft cover (17), and install by threading sleeve (21) into port (23). If sleeve (21) will not seat, adapter (22) is not seated correctly in front output shaft cover (17).

123. Aline square pin (18) in 90° angle drive (20) with square hole in small end of adapter (22) and connect 90° angle drive (20) on sleeve (21) with swivel nut (19).

124. Pull range shifter shaft (11) to outer most detent position, which is LOW, and turn input flange (12). Parking brakedrum (25) must turn in same direction as input flange but at one-half speed of input flange (12).

125. Push range shifter shaft (11) to innermost detent position, which is HIGH, and turn input flange (12). Parking brakedrum (25) must turn in same direction as input flange (12) and at same speed as input flange (12).

NOTE

Compressed air source must be regulated at 60-90 psi (414-621 kPa).

126. Connect air line (14) to elbow (13) on front output shaft cover (17) and apply air pressure.

127. Holding input flange (12), attempt to turn front output flange (16) left and right. Front output flange (16) should turn clockwise but not counterclockwise.

128. Disconnect airline (14) from elbow (13) and connect to adapter on front of air cylinder (15) and apply air pressure.

129. Holding input flange (12), attempt to turn front output flange (16) left and right. Front output flange (16) should turn counterclockwise but not clockwise.

130. Disconnect air line (14) from adapter.

131. Install breather (10) in top of housing (5).

NOTE

Apply sealing compound to threads of drain and filler plugs before installation.

132. Install drainplug (24) and filler plug (26) on housing (5) and front output shaft cover (17). Tighten plugs (24) and (26) 100 lb-ft (136 N•m) minimum.

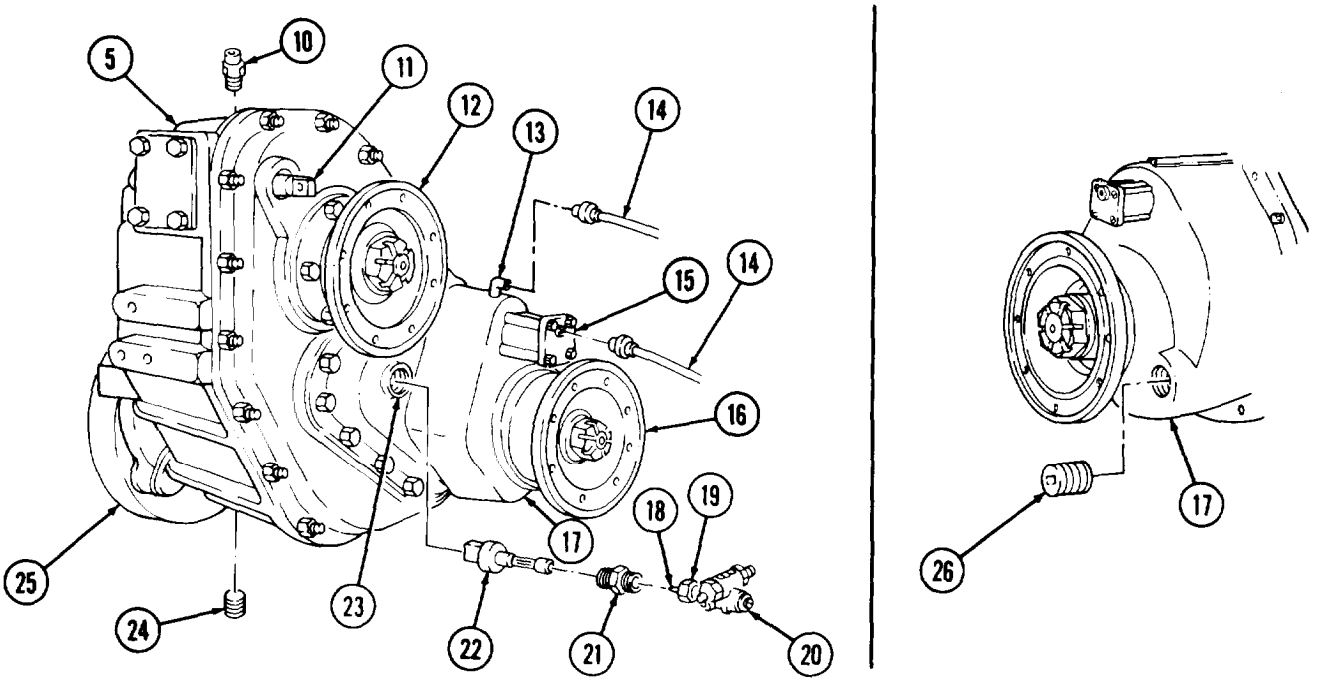

9-4. TRANSFER REPAIR (Contd)

133. Connect lifting device to lifting bracket (2) on transfer (1) and take up slack in lifting device.

NOTE

Step 134 is an alternate method of attaching lifting device to transfer.

134. Remove two nuts (3), lockwashers (4), and screws (5) from transfer (1) and install chain on transfer (1) with two washers (7) and (8), screw (6), and nut (9).

WARNING

All personnel must stand clear during lifting operations. A swinging or shifting load may cause injury to personnel.

135. Holding tension on chain or lifting bracket (2), remove seven screws (10) and washers (11) from stand and transfer (1). Move transfer (1) to storage or installation area.

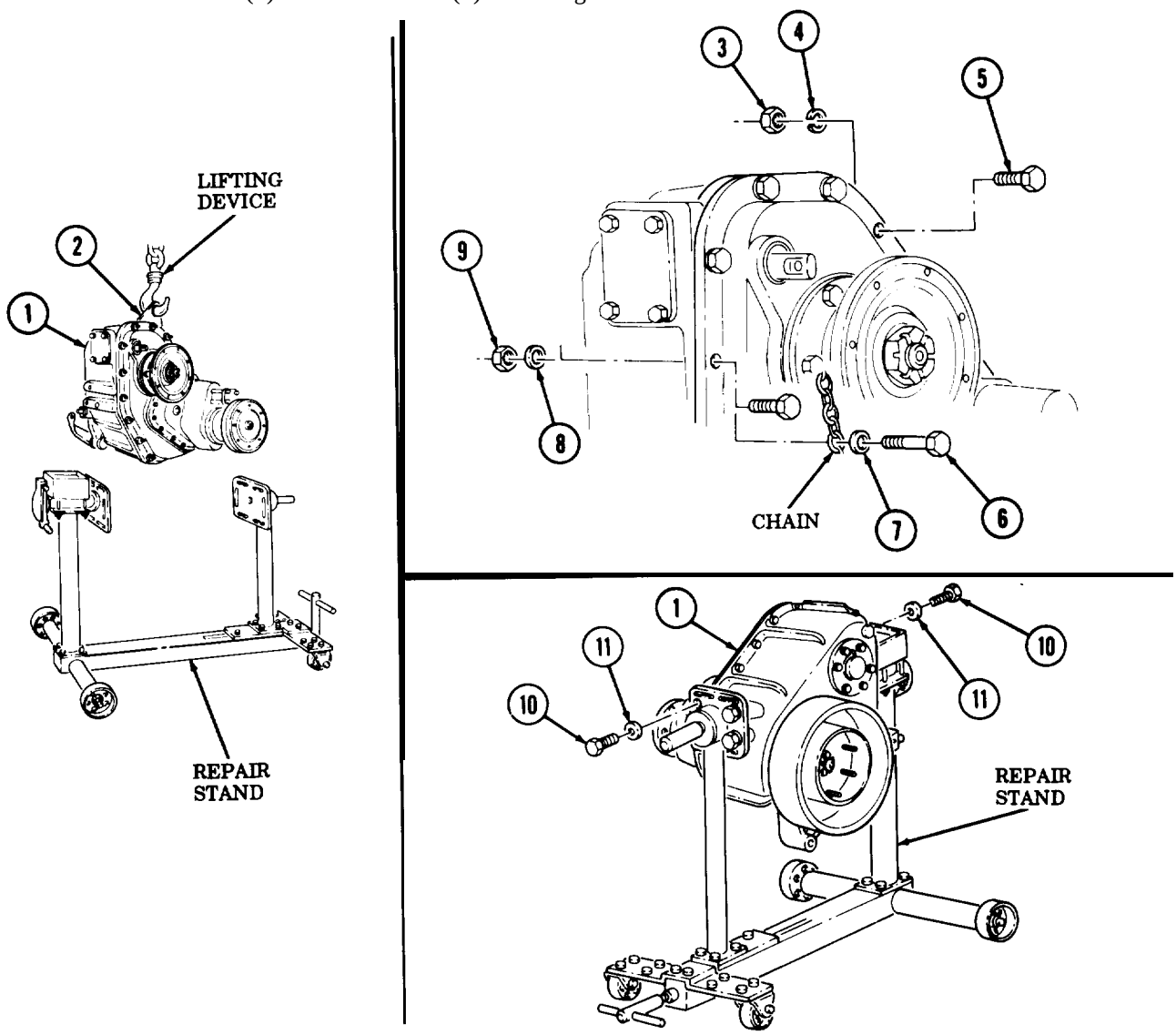

FOLLOW-ON TASKS: • Install transfer assembly (para. 9-3).
• Install parking brakeshoe (TM 9-2320-260-20).

CHAPTER 10

AXLES AND SUSPENSION MAINTENANCE

Section I. Front Axle Maintenance (page 10-1)
Section II. Forward-Rear and Rear-Rear Axle Replacement (page 10- 16)
Section III. Differential Maintenance (page 10-18)

Section 1. FRONT AXLE MAINTENANCE

10-1. FRONT AXLE MAINTENANCE INDEX

PARA. NO.	TITLE	PAGE NO.
10-2.	Front Axle Replacement	10-1
10-3.	Steering Knuckle Maintenance	10-4
10-4.	Wheel Hub Spindle Maintenance	10-14

10-2. FRONT AXLE REPLACEMENT

THIS TASK COVERS:

a. Removal **b. Installation**

INITIAL SETUP

APPLICABLE MODELS
All

TOOLS
General mechanic's tool kit (Appendix B, Item 1)
Torque wrench, 3/4-in. dr. (Appendix B, Item 2)
1-5/16-in. socket, 3/4-in. dr (Appendix B, Item 31)
Jack stands
Hydraulic jack

MATERIALS/PARTS
Eight lockwashers (Appendix D, Item 241)

PERSONNEL REQUIRED
Three

REFERENCES (TM)
TM 9-2320-260-20
TM 9-2320-260-34P-1

EQUIPMENT CONDITION
- Front wheels removed (TM 9-2320-260-20).
- Front propeller shaft removed (TM 9-2320-260-20).
- Drag link removed (TM 9-2320-260-20).
- Steering assist cylinder removed (TM 9-2320-260-20).
- Front shock absorbers removed (TM 9-2320-260-20).

GENERAL SAFETY INSTRUCTIONS
Weight of vehicle must be supported on jack stands at all times.

10-2. FRONT AXLE REPLACEMENT (Contd)

WARNING

Weight of vehicle must be supported on jack stands at all times.
Do not attempt to support weight of vehicle on hydraulic jack.
Injury or death to personnel may result if jack fails.

a. Removal

1. Disconnect brake hose (13) from tee (14).
2. Raise axle (5) with hydraulic jack under differential (4) and place two jack stands under left. and right springs (11) between axle (5) and spring hangers (12).

NOTE

Mark clamp plates and saddle plates for installation.

3. Remove eight nuts (7), lockwashers (8), and two clamp plates (9) from U-bolts (1) and axle (5). Discard lockwashers (8).
4. Remove four U-bolts (1), two saddle plates (2), and two rubber bumpers (3) from springs (11).

NOTE

Two assistants will help with step 5.

5. Lower axle (5) from springs (11) and spring seats (6) until it clears truck. Remove from under truck.
6. If new axle (5) is to be installed, remove brake lines and fittings (TM 9-2320-260-20).

b. Installation

NOTE

If old axle is to be installed, proceed to step 2.

1. If new axle (5) is to be installed, install brake lines and fittings (TM 9-2320-260-20).

NOTE

- Two assistants will help with installation.
- Clamp plates and saddle plates must be installed in same position as removed.

2. Install two rubber bumpers (3) and saddle plates (2) on spring centering bolts (10) with four U-bolts (1).
3. Aline spring seats (6) on axle (5) under springs (11). Ensure spring seats (6) are over locator pins (15) on axle housing (16).
4. Raise axle (5) with hydraulic jack under differential (4) until holes in spring seats (6) meet spring centering bolts (10).

NOTE

Ensure clamp plates are installed with shock absorber mounting holes on outside, toward rear of truck, angled down.

5. Install two clamp plates (9) on four U-bolts (1) with eight new lockwashers (8) and nuts (7). Tighten nuts (7) 350-400 lb-ft (475-542 N•m).
6. Raise axle (5) with hydraulic jack under differential (4) and remove two jack stands from spring hangers (12).
7. Connect brake hose (13) on tee (14).

10-2. FRONT AXLE REPLACEMENT (Contd)

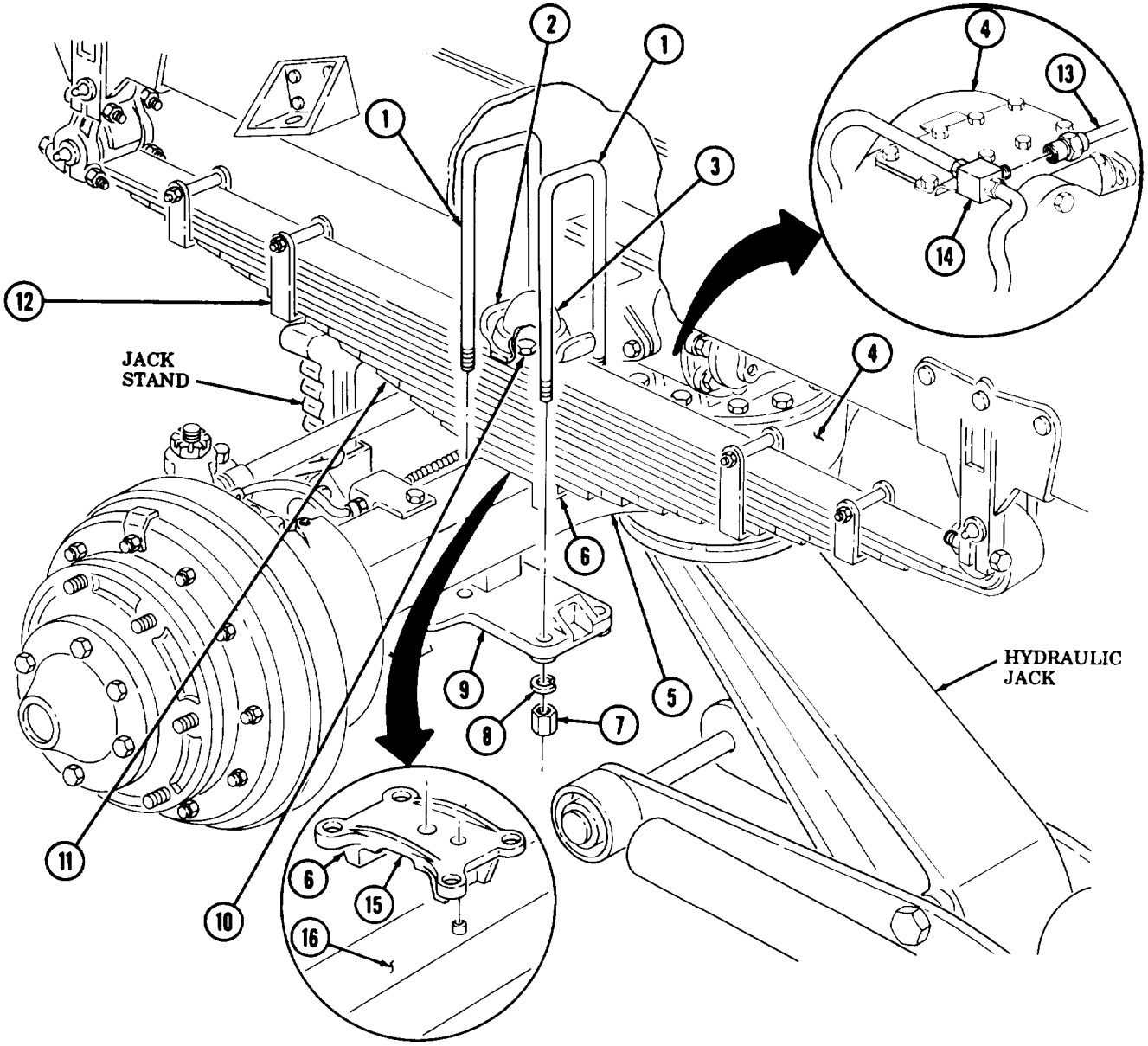

FOLLOW-ON TASKS:
- Install front shock absorbers (TM 9-2320-260-20).
- Install drag link (TM 9-2320-260-20).
- Install steering assist cylinder (TM 9-2320-260-20).
- Install front propeller shaft. (TM 9-2320-260-20).
- Install front wheels (TM 9-2320-260-20).
- Check toe-in alinement (TM 9-2320-260-20).

10-3. STEERING KNUCKLE MAINTENANCE

THIS TASK COVERS:

a. Removal
b. Cleaning and Inspection
c. Installation
d. Adjustments

INITIAL SETUP

APPLICABLE MODELS
All

TOOLS
General mechanic's tool kit (Appendix B, Item 1)
Torque wrench, 314-in. dr. (Appendix B, Item 2)
1-5/6 in. socket, 3/4-in. dr. (Appendix B, Item 31)
Dial indicator gage (Appendix B, Item 11)
Inside caliper micrometer (Appendix B, Item 9)
Outside caliper micrometer (Appendix B, Item 8)
Arbor press (Appendix B, Item 7)
Vise (Appendix B, Item 38)
Bearing remover/replacer (Appendix B, Item 83)
Oil seal replacer (Appendix B, Item 40)

MATERIALS/PARTS
Four lockwashers (Appendix D, Item 237)
Six lockwashers (Appendix D, Item 219)
Four bushings (Appendix D, Item 8)
Spacers (Appendix D, Item 5 18)
Seal retainer (Appendix D, Item 473)
Two grease fittings (Appendix D, Item 157)
Two cotter pins (Appendix D, Item 22)
Sealing compound (Appendix C, Item 43)
Lubricating oil (Appendix C, Item 20)
GAA grease (Appendix C, Item 14)
Two puller screws (Appendix C, Item 35)

REFERENCES (TM)
LO 9-2320-260-12
TM 9-237
TM 9-2320-260-20
TM 9-2320-260-34P-1

EQUIPMENT CONDITION
- Axle and U-joint assemblies removed (TM 9-2320-260-20).
- Hydraulic hoses disconnected (TM 9-2320-260-20).
- CV boot removed (TM 9-2320-260-20).

NOTE

Right and left side steering knuckle maintenance is basically the same. This procedure covers the left side steering knuckle.

a. Removal

1. Remove cotter pin (14), nut (15), and tie rod (16) from steering knuckle (1). Discard cotter pin (14).
2. Remove cotter pin (12), nut (11), and drag link (10) from steering arm (3). Discard cotter pin (12).
3. Remove two screws (20) and (24), lockwashers (21) and (23), and brush guard (22) from steering knuckle (1). Discard lockwashers (21) and (23).
4. Remove four nuts (6), lockwashers (5), grease fitting (7), bracket (8), spring (9), and steering arm (3) from steering knuckle (1). Discard grease fitting (7) and lockwashers (5).
5. Remove four bushings (4) from steering arm (3). Discard bushings (4).
6. Remove two screws (20), lockwashers (21), grease fitting (19), and plate (18) from steering knuckle (1). Discard lockwashers (21) and grease fitting.
7. Remove spacer (13) from sleeve (2). Discard spacer (13).
8. Using two puller screws, remove sleeves (17) and (2) from steering knuckle (1).
9. Remove steering knuckle (1) from axle housing (27) by pulling steering knuckle (1) out at bottom to clear kingpin (28) and lifting steering knuckle (1) off kingpin (26).
10. Remove seal retainer (25) from axle housing (27). Discard seal retainer (25).

10-3. STEERING KNUCKLE MAINTENANCE (Contd)

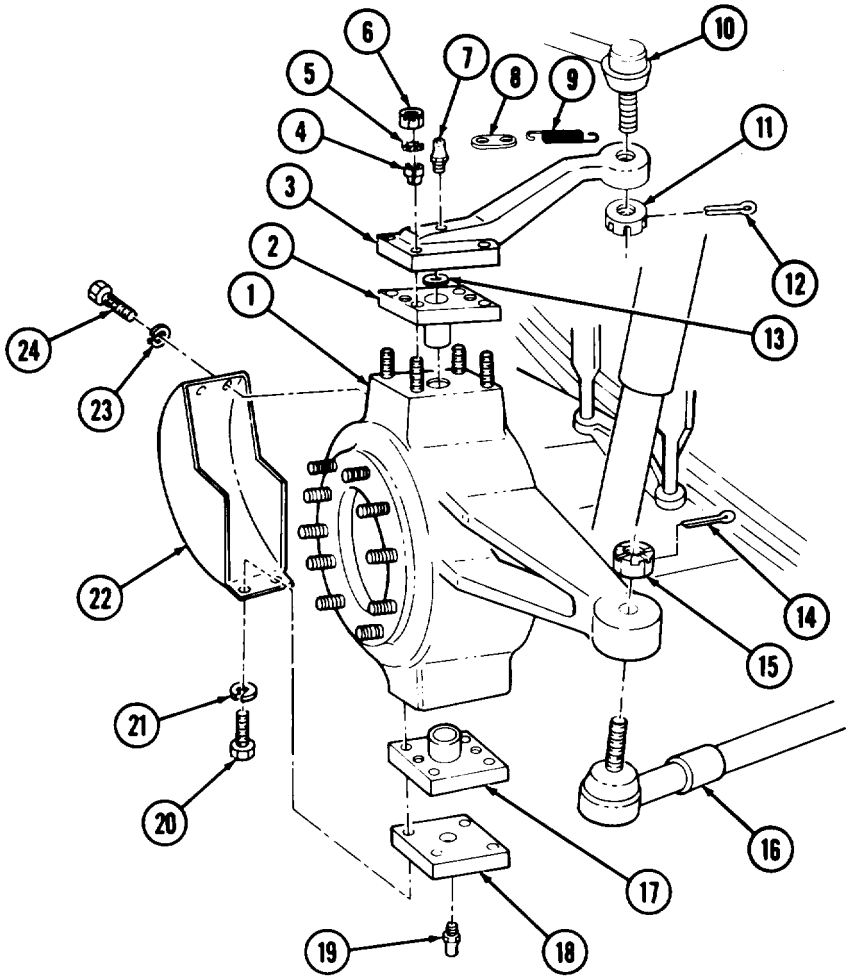

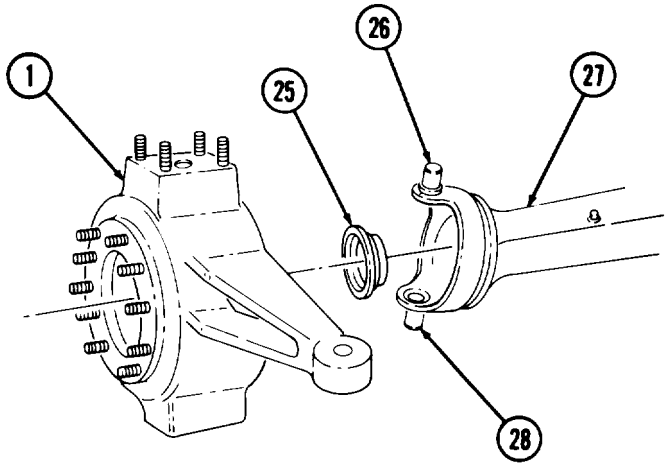

10-3. STEERING KNUCKLE MAINTENANCE (Contd)

b. Cleaning and Inspection

1. For general cleaning instructions, refer to para. 2-8.
2. For general inspection instructions, refer to para. 2-9.
3. Inspect steering arm (1) for cracks, leaks, and bends. Replace steering arm (1) if cracked, broken, or bent.
4. Inspect steering knuckle (3) for cracks, breaks, and bends; stripped, broken, and damaged studs (2) and (4). Replace studs (2) or (4) if damaged, refer to para. 2-10. Replace steering knuckle (3) if cracked, broken, or bent.
5. Inspect stop screw (5) for breaks and bends. Replace stop screw (5) if bent or broken.
6. Inspect two sleeves (6) for nicks, scratches, scoring, and worn or damaged bushings (7). Measure inside diameter of sleeves (6). Refer to table 10-1, Steering Knuckle and Steering Arm Wear Limits for measurements. Replace sleeves (6) or bushings (7) if damaged or worn.

NOTE

Perform steps 7 through 9 if bushing requires replacement.

7. Using arbor press and bearing remover/replacer, remove bushing (7) from sleeve (6). Discard bushing (7).
8. Position new bushing (7) on sleeve (6). Using arbor press and bearing remover/replacer, install bushing (7) in sleeve (6).
9. Measure inside diameter of new bushing (7). Replace or ream bushing (7) if inside diameter is not within 1.500-1.501 in. (38. 10-38.13 mm).
10. Inspect kingpins (8) of axle housing (9) for nicks, cracks, pitting, scoring, and wear. Measure outside diameter of kingpins (8), refer to table 10-1, Steering Knuckle and Steering Arm Wear Limits, for measurements. Repair minor defects with five mill file or crocus cloth. Replace axle housing (9) if kingpins (8) are damaged or worn.

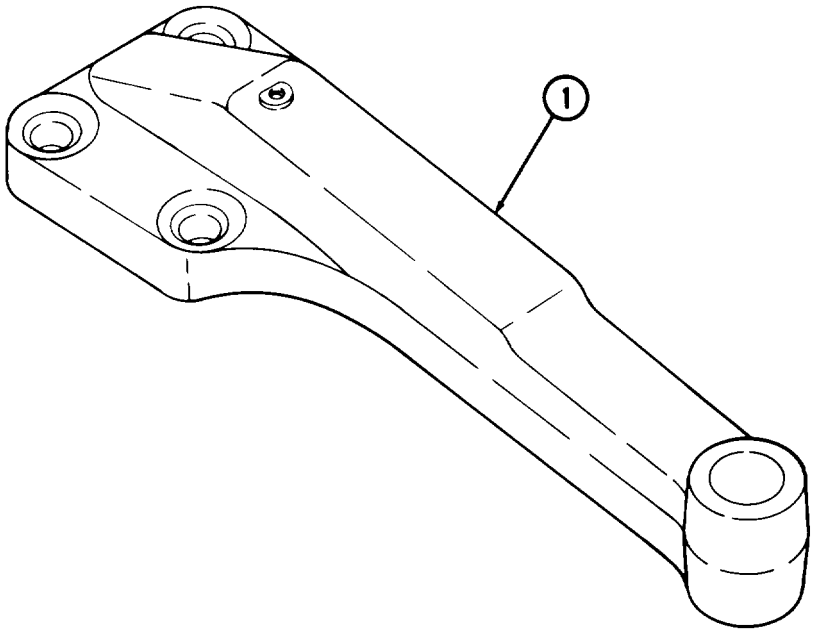

10-3. STEERING KNUCKLE MAINTENANCE (Contd)

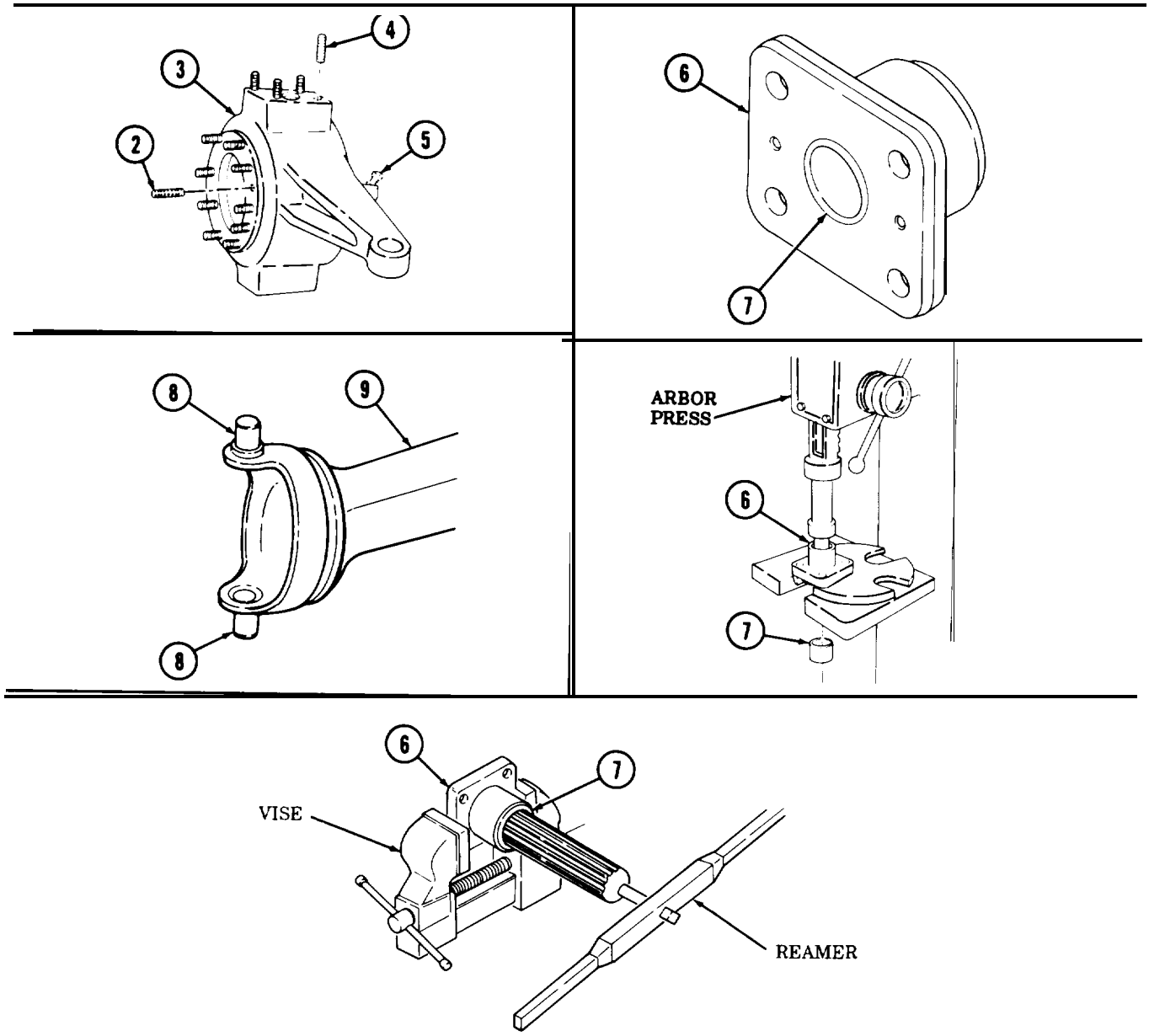

Table 10-1. Steering Knuckle and Steering Arm Wear Limits.

ITEM NO.	ITEM/POINT OF MEASUREMENT	WEAR LIMITS/TOLERANCES	
		INCHES	MILLIMETERS
6	Sleeve *(2)*		
	Bushing bore – without bushing (10) – maximum	1.626	41.30
7	Bushing - inside diameter – maximum	1.501	38.13
8	Kingpin (2) – outside diameter – minimum	1.499	38.07

10-3. STEERING KNUCKLE MAINTENANCE (Contd)

c. Installation

1. Using seal installer, install new seal retainer (2) in axle housing (4).
2. Place steering knuckle (1) over upper kingpin (3) and tip down to pass over lower kingpin (5) of axle housing (4).
3. Lubricate sleeve (6) and upper kingpin (3) with GAA grease. Cover contract flange of sleeve (6) with a bead of sealing compound.
4. place sleeve (6) over upper studs of steering knuckle (1) and upper kingpin (3). Use two nuts (1) on sleeve (6) to hold in position on kingpin (3) and steering knuckle (1).
5. Lubncate sleeve (21) and lower kingpin (5) with GAA grease. Cover contact flange of sleeve (21) with a bead of sealing compound.
6. Place sleeve (21) in steering knuckle (1) and over lower kingpin (5).
7. Remove two nuts (10) from sleeve (6).
8. Place a bead of sealing compound on upper surface of sleeve (6).
9. Place new spacer (17), steering arm (7), bracket (12), and spring (13) over steering knuckle (1). Bracket (12) is positioned over inner rear stud.
10. Install four new bushings (8) over studs of steering knuckle (1).
11. Install steering arm (7) and bracket (12) on steering knuckle (1) with four new lockwashers (9) and nuta (10). Tighten nuts (10) 185-235 lb-ft (251-319 N•m).
12. Install grease fitting (11) on steering arm (7).
13. Place a bead of sealing compound on hardened surface of plate (22) around holes and along top edge of contact surface.
14. Position hardened side of plate (22) on sleeve (21), Ensure holes in plate (22) and sleeve (21) aline with steering knuckle (1) holes.
15. Install sleeve (21) and plate (22) on steering knuckle (1) with two new lockwashers (25) and screws (24). Install screws (24) in two rear holes of steering knuckle (1). Finger tighten screws (24).
16. Install brush guard (26) on steering knuckle (1) with two new lockwashers (27), screws (28), new lockwashers (25), and screws (24). Tighten four screws (24) and two screws (28) 130-170 lb-ft (177-231 N•m).
17. Install grease fitting (23) in plate (22).

NOTE

Perform adjustment procedure (task d) if parts were replaced or assembly was out of adjustment.

18. Install tie rod (20) on steering knuckle (1) with nut (19). Tighten nut (19) 165-180 lb-ft (224-244 N•m). Install new cotter pin (18) in nut (19).
19. Install drag link (14) on steering arm (7) with nut (15). Tighten nut (15) 165-180 lb-ft (224-244 N•m). Install new cotter pin (16) in nut (15).

10-3. STEERING KNUCKLE MAINTENANCE (Contd)

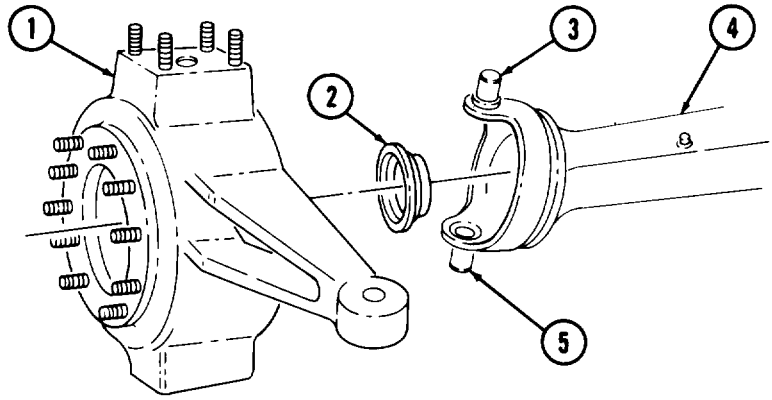

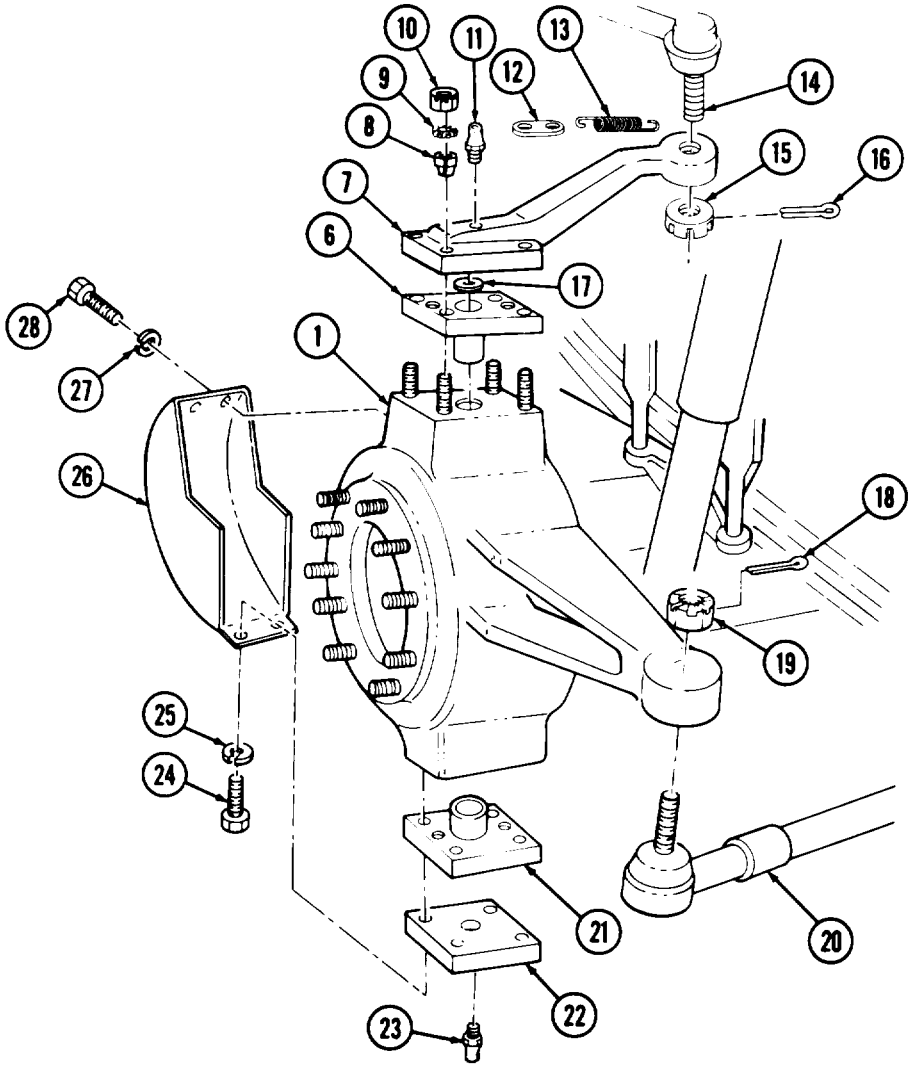

10-3. STEERING KNUCKLE MAINTENANCE (Contd)

d. Adjustments

NOTE

- Right and left steering knuckle adjustment is the same. This procedure covers left steering knuckle.
- Use a cold chisel to break loose tack weld (TM 9-237) between nut and axle housing if old screw is present and adjustment is needed.

1. If steering stop screw (8) is replaced or needs adjustment, proceed as follows:
   a. Aline the centerline (4) of steering arm (3) and axle housing (5) and place reference edge (1) of protractor on same centerlines. Protractor center index is on grease fitting (2).
   b. Scribe reference line (6) on steering knuckle arm (7). Record protractor angle reading of reference line (6).
   c. Add 28° to 28-1/2° to angle reading recorded above. Turn steering knuckle arm (7) so that reference line (6) alines with new angle on protractor. Turn steering stop screw (8) in if necessary.
   d. Turn steering stop screw (8) until head of steering stop screw (8) contacts axle housing (5).
   e. Hold steering stop screw (8) to prevent turning and tighten nut (9) 94-120 lb-ft (127-163 N•m).
   f. Tack weld steering stop screw (8) to nut (9) and nut (9) to steering knuckle arm (7).
2. Measure and adjust steering knuckle end play as follows:
   a. Install dial indicator gage with magnetic stand on axle housing (5) so that measuring pointer (10) is on steering arm (3) and will measure vertical movement of steering knuckle (12).
   b. With steering knuckle (12) unsupported by lever (13), set dial indicator gage to zero. If nonzeroing gage is used, record reading of dial indicator gage.

NOTE

Jack stand may be used as fulcrum.

   c. Position lever (13) and fulcrum (11) under steering knuckle (12).
   d. Push down on outer end of lever (13) and lift steering knuckle (12) until vertical motion of steering knuckle (12) ends. Record reading on dial indicator gage.
   e. If reading is 0.004-0.014 in. (0. 10-0.36 mm), go back to task c., steps 18 and 19. If reading is more or less, go to steps f. and g.

10-3. STEERING KNUCKLE MAINTENANCE (Contd)

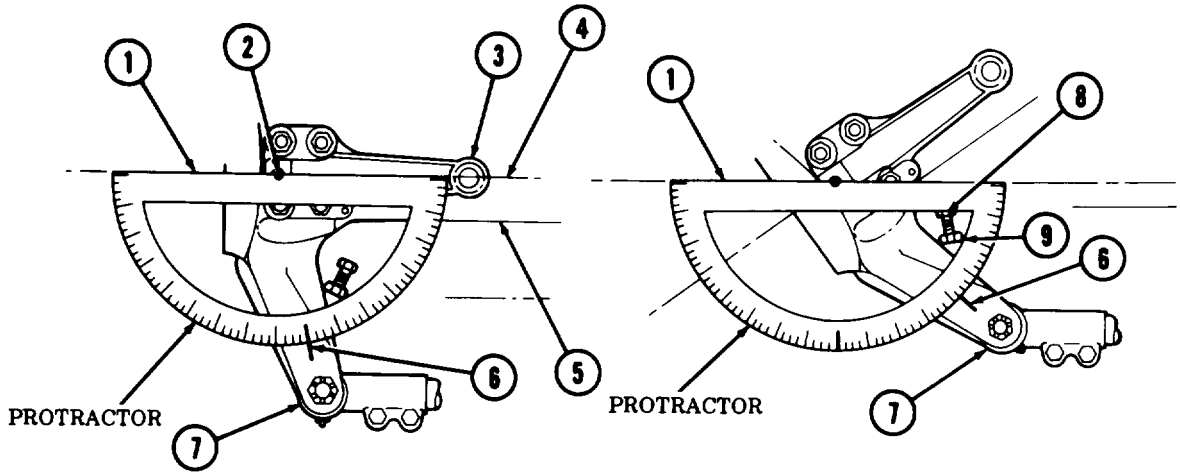

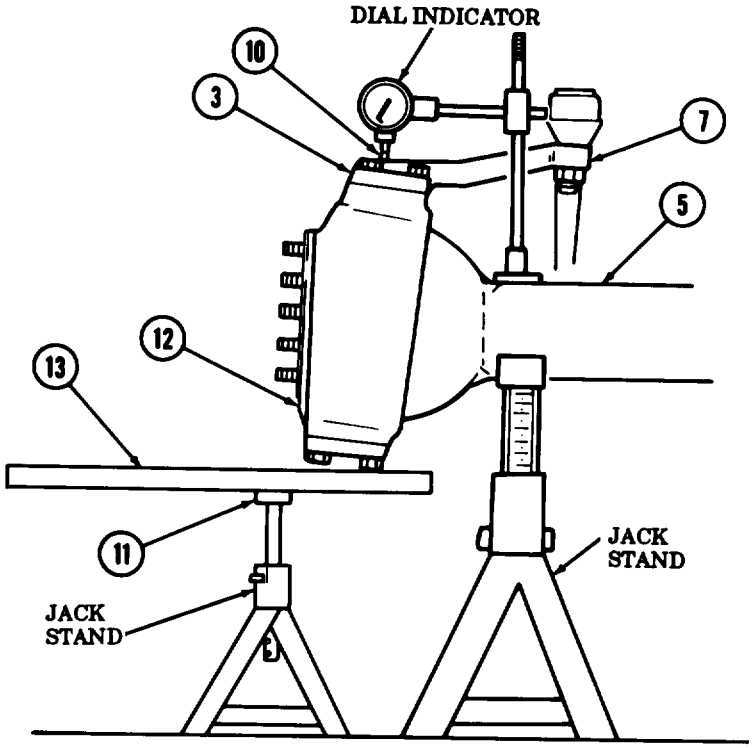

10-3. STEERING KNUCKLE MAINTENANCE (Contd)

f. If reading is less than 0.004 in. (0. 10 mm), perform steps 3 through 12 for removing spacer (9) and replacing with thinner spacer (9). Repeat measurement of steering knuckle (1) end play in steps a., b., c., and d. of step 2 of this task.

g. If reading is more than 0.014 in. (0.36 mm), perform steps 3 through 12 for removing spacer (9) and replacing with thicker spacer (9). Repeat measurement of steering knuckle (1) end play in steps a., b., c., d., and e. of step 2 of this task.

3. Remove four nuts (6), lockwashers (5), bracket (7), spring (8), and steering arm (3) from steering knuckle (1). Discard lockwashers (5).
4. Remove four bushings (4) from steering arm (3). Discard bushings (4).
5. Using two puller screws, remove spacer (9) and sleeve (2) from steering knuckle (1). Discard spacer (9).
6. Lubricate sleeve (2) and upper kingpin (11) with GAA grease. Cover contact flange of sleeve (2) with a bead of sealing compound.
7. Place sleeve (2) over studs (10) of steering knuckle (1) and upper kingpin (11). Use two nuts (6) to hold sleeve (2) in position on upper kingpin (11) and steering knuckle (1).
8. Remove two nuta (6) from sleeve (2).
9. Place a bead of sealing compound on upper surface of sleeve (2).
10. Place spacer (9), steering arm (3), bracket (7), and spring (8) over steering knuckle (1). Bracket (7) is positioned over inner rear stud.
11. Install four new bushings (4) over studs (10) on steering knuckle (1).
12. Install steering arm (3) and bracket (7) on steering knuckle (1) with four new lockwashers (5) and nuts (6). Tighten nuts (6) 185-235 lb-ft (251-319 N•m).

10-3. STEERING KNUCKLE MAINTENANCE (Contd)

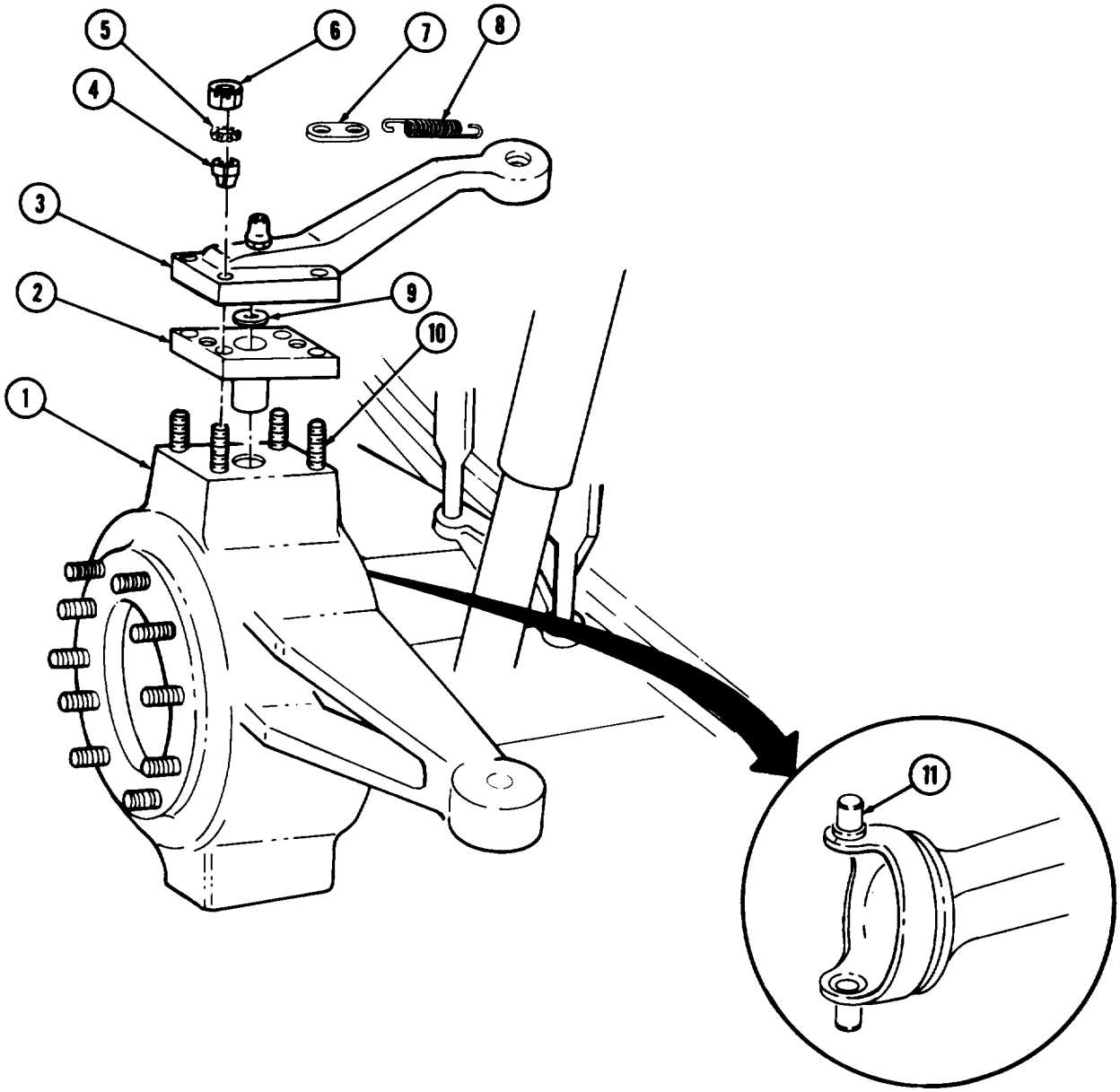

FOLLOW-ON TASKS:
- Install axle and U-joint assemblies (TM 9-2320-260-20).
- Install hydraulic hoses (TM 9-2320-260-20).
- Bleed front brakes (TM 9-2320-260-20).
- Install CV boot (TM 9-2320-260-20).
- Lubricate steering knuckle and differential (as required) (LO 9-2320-260-12).

10-4. WHEEL HUB SPINDLE MAINTENANCE

THIS TASK COVERS:

a. Removal
b. Inspection
c. Installation

INITIAL SETUP

APPLICABLE MODELS
All

SPECIAL TOOLS
Spindle bearing remover (Appendix B, Item 39)

TOOLS
General mechanic's tool kit (Appendix B, Item 1)
Inside caliper micrometer (Appendix B, Item 9)
Arbor press (Appendix B, Item 7)

MATERIALS/PARTS
Ten lockwashers (Appendix D, Item 243)
Inner gasket (Appendix D, Item 146)
Outer gasket (Appendix D, Item 147)
Sealing compound (Appendix C, Item 43)
GAA grease (Appendix C, Item 14)

REFERENCES (TM)
LO 9-2320-260-12
TM 9-2320-260-20
TM 9-2320-260-34P-1

EQUIPMENT CONDITION
Hub and drum assembly removed (as required) (TM 9-2320-260-20).

a. Removal

NOTE

Have drainage container ready to catch brake fluid.

1. Remove screw (10), gasket (9), hydraulic fitting (8), gasket (7), and brake line (11) from wheel cylinder (4). Hydraulic fitting (8) remains connected to brake line (11). Discard gaskets (7) and (9).
2. Remove spring (1) from brakeshoes (2).
3. Remove ten nuts (17) and lockwashers (16) from studs (13). Discard lockwashers (16).
4. Remove deflector (15) and plate assembly (3) from steering knuckle (12).
5. Drain lubricant from differential as required (LO 9-2320-260-12).
6. Remove spindle (5) from steering knuckle (12) and axle (14).
7. Remove spindle bearing (6) from spindle (5).
8. Remove sealing compound remains from face of spindle (5) and steering knuckle (12).

b. Inspection

1. Inspect spindle (5) for bends, cracks, nicks, or burrs on sealing surfaces and damaged threads. Repair minor thread damage with tine mill file. Replace spindle (5) if threads are stripped, crossed, or broken.
2. Inspect spindle bearing (6) for nicks, cracks, and scoring. Replace spindle bearing (6) if nicked, cracked, or scored.
3. Measure inside diameter of spindle bearing (6). Replace if measurement is over 2.251 in. (57. 18 mm).

NOTE

Perform steps 4 through 6 only if spindle bearing is being replaced.

4. Using arbor press, remove spindle bearing(6) from spindle (5).
5. Measure bearing bore of spindle (5). Replace if bearing bore diameter is over 2.376 in. (60.35 mm) or there is evidence of scoring or damage to bearing bore.

10-4. WHEEL HUB SPINDLE MAINTENANCE (Contd)

6. Using arbor press and bearing replace, install new spindle bearing (6) into spindle (5). Ensure oil groove of spindle bearing (6) alines with machined grooved of spindle (5).

c. Installation

1. Install spindle bearing (6) in spindle (5).
2. Apply a bead of sealing compound around steering knuckle face of spindle (5) just inside stud holes.
3. Lubricate spindle bearing (6) and bushing journal of axle (14) with GAA grease.
4. Carefully slide spindle (5) over axle (14) and position over studs (13).
5. Install plate assembly (3) and deflector (15) on steering knuckle (12) with ten new lockwashers (16) and nuts (17). Tighten nuts (17) 130-167 lb-ft (176-226 N•m).
6. Install spring (1) on brakeshoes (2).
7. Install brake line (11) and hydraulic fitting (8) on wheel cylinder (4) with new gaskets (7) and (9) and screw (10).

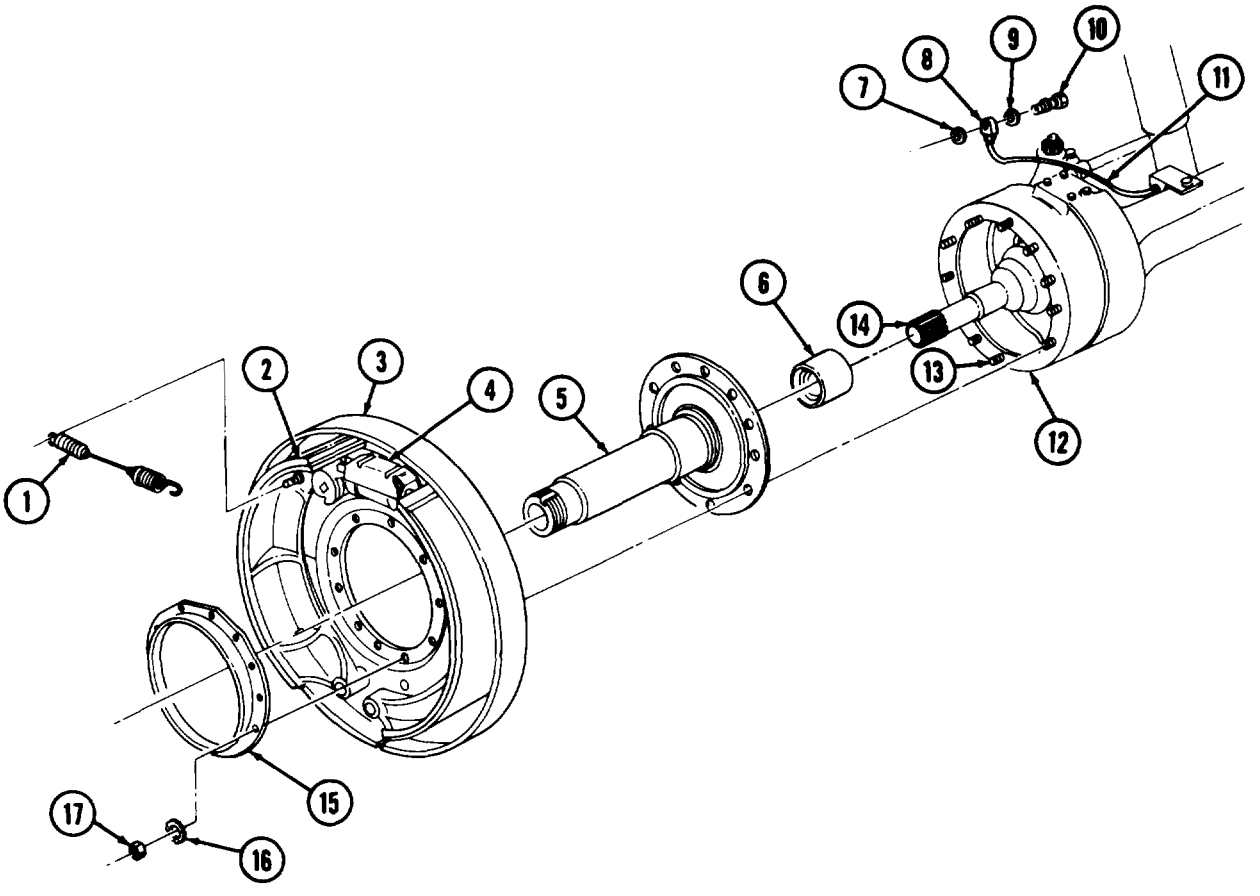

FOLLOW-ON TASKS:
- Install hub and drum assembly (TM 9-2320-260-20).
- Bleed brakes (TM 9-2320-260-20).
- Lubricate differential (LO 9-2320-260-12).

Section II. FORWARD-REAR AND REAR-REAR AXLE REPLACEMENT

10-5. FORWARD-REAR AND REAR-REAR AXLE REPLACEMENT

THIS TASK COVERS:

a. Removal **b. Installation**

INITIAL SETUP

APPLICABLE MODELS
All

TOOLS
General mechanic's tool kit (Appendix B, Item 1)
Torque wrench, 3/4-in. dr. (Appendix B, Item 2)
1-5/16-in. socket, 3/4-in. dr. (Appendix B, Item 31)
Hydraulic jack
Jack stands

MATERIALS/PARTS
elve lockwashers (Appendix D, Item 245)
Twine (Appendix C, Item 54)

REFERENCES (TM)
TM 9-2320-260-20
TM 9-2320-260-34P-1

EQUIPMENT CONDITION
- Inner and outer wheels removed (as required) (TM 9-2320-260-20).
- Propeller shaft(s) removed (as required) (TM 9-2320-260-20).

GENERAL SAFETY INSTRUCTIONS
Weight of vehicle must be supported on jack stands at all times.

WARNING

Weight of vehicle must be supported on jack stands at all times.
Do not attempt to support weight of vehicle on hydraulic jack.
Injury or death to personnel may result if jack fails.

NOTE

Rear-rear and forward-rear axles are replaced the same way. This procedure covers the rear-rear axle.

a. Removal

1. Disconnect brake hose (21) from tee (22).
2. Place hydraulic jack under differential housing (5) on axle (6) and raise jack enough to move two jack stands from under axle (6) to under spring seats (18).
3. Lower hydraulic jack enough to relieve tension on springs (17).

NOTE

Step 4 applies to left side.

4. Remove four nuts (7), lockwashers (8), screws (3), two clips (4), plate (9), and bracket (2) from axle (6). Tie upper torque rod (1) out of the way. Discard lockwashers (8).
5. Remove eight nuts (15), lockwashers (16), screws (20), and four clips (19) from two brackets (12) and (14). Lower two brackets (14). Discard lockwashers (16).
6. Remove two brackets (12) and seats (13) from axle (6).

NOTE

Two assistants will help with step 7.

7. Lower hydraulic jack under differential housing (5) and remove axle (6) from truck.

10-5. FORWARD-REAR AND REAR-REAR AXLE REPLACEMENT (Contd)

b. Installation

NOTE

Two assistants will help with steps 1 through 4.

1. Place hydraulic jack and axle (6) under truck and position two seats (13) on axle (6).
2. Install two brackets (12) on ends of springs (17) over axle (6).
3. Raise hydraulic jack until seats (13) meet brackets (12) and aline holes in brackets (12) with guide pin (10) on axle (6).
4. Aline two brackets (14) with brackets (12) and install axle (6) with eight bolts (20), four clips (19), eight new lockwashers (16), and nuts (15). For M816 model, tighten nuts (15) 320-425 lb-ft (434-576 N•m). For all other models, tighten nuts (15) 280-360 lb-ft (380-488 N•m).

NOTE

Step 5 applies to left side only.

5. Untie upper torque rod (1), aline guide holes in bracket (2) with guide pins (11) and (10) and install bracket (2) and plate (9) on axle (6) with four screws (3), two clips (4), four new lockwashers (8), and nuts (7). For M816 model, tighten nuts (7) 320-425 lb-ft. (434-576 N•m). For all other models, tighten nuts (7) 280-360 lb-ft (380-488 NŽm).
6. Raise hydraulic jack enough to remove two jack stands from under spring seats (18). Lower vehicle to ground and remove hydraulic jack from differential housing (5).
7. Connect brake hose (21) to tee (22).

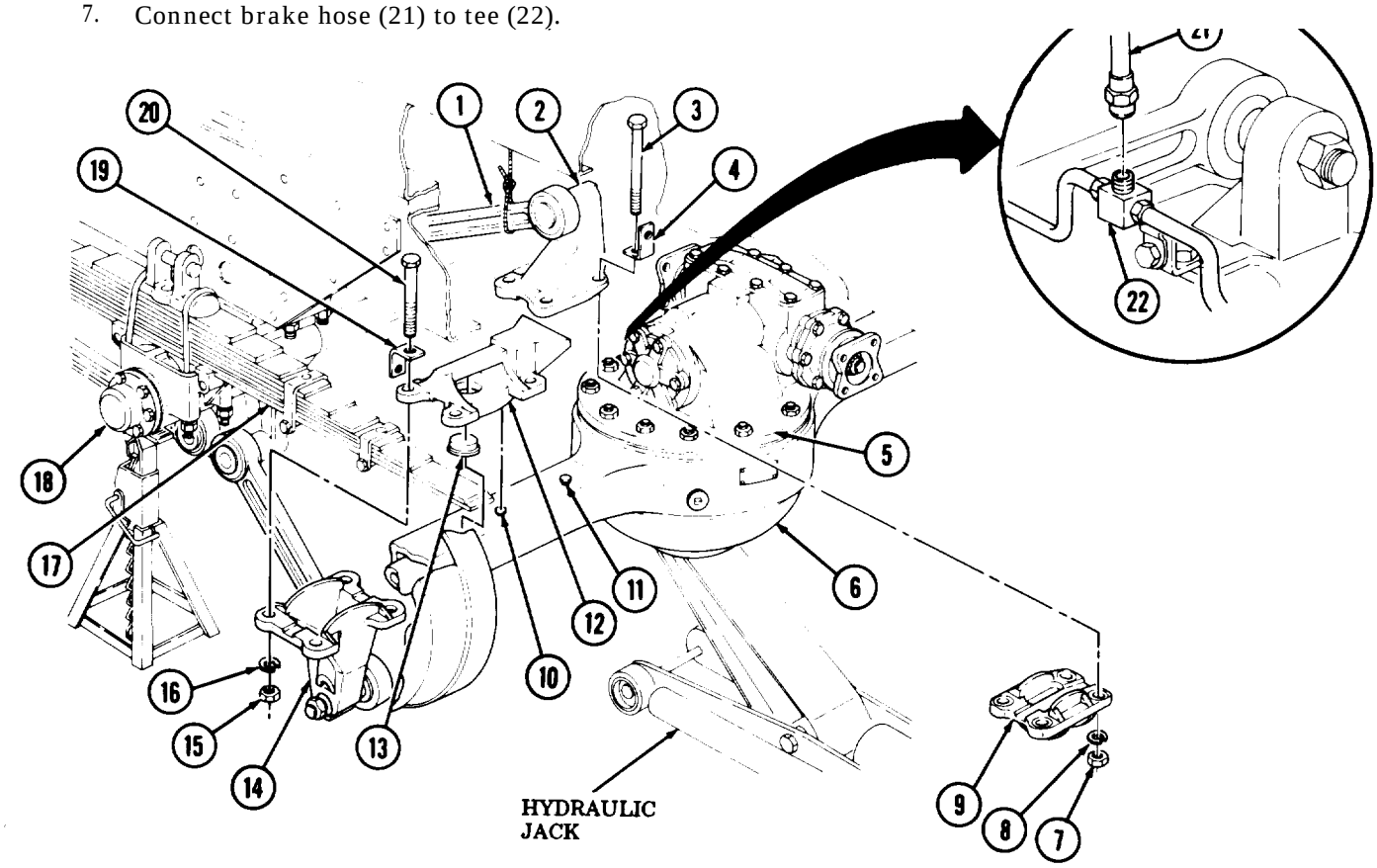

FOLLOW-ON TASKS
- Install propeller shaft (TM 9-2320-260-20).
- Install brake line (as required) (TM 9-2320-260-20).
- Install inner and outer wheels (as required) (TM 9-2320-260-20).

Section III. DIFFERENTIAL MAINTENANCE

10-6. DIFFERENTIAL MAINTENANCE INDEX

PARA. NO.	TITLE	PAGE NO.
10-7.	Front and Rear Differential Maintenance	10-18
10-8.	Differential and Differential Carrier Repair	10-22
10-9.	Differential Oil Seals Replacement	10-52

10-7. FRONT AND REAR DIFFERENTIAL MAINTENANCE

THIS TASK COVERS:

a. Removal
b. Cleaning and Inspection
c. Installation

INITIAL SETUP

APPLICABLE MODELS
All

TOOLS
General mechanic's tool kit (Appendix B, Item 1)
Torrque wrench, 1/2-in. dr. (Appendix B, Item 3)
Lifting device
Chain
Hydraulic jack

MATERIALS/PARTS
Crocus cloth (Appendix C, Item 53)
Sealing compound (Appendix C, Item 43)
Drycleaning solvent (Appendix C, Item 48)

REFERENCES (TM)
LO 9-2320-260-12
TM 9-2320-260-20
TM 9-2320-260-34 P-1

EQUIPMENT CONDITION
- Axle assembly drained (LO 9-2320-260-12).
- Axle assembly removed (para. 10-2 or 10-5),

GENERAL SAFETY INSTRUCTIONS
- All personnel must stand clear during lifting operations.
- Keep fire extinguisher nearby when using drycleaning solvent.
- Eye protection is required when using wire brush for cleaning.

a. Removal

1. Remove eighteen nuts (2) and washers (3) from axle housing mounting studs (6).
2. Attach chain to differential carrier (1).
3. Attach lifting device to chain.

WARNING

All personnel must stand clear during lifting operations. A snapped chain, swinging or shifting load may cause injury to personnel.

CAUTION

When lifting carrier differential assembly out of axle housing, use care not to damage mounting studs. Assistant will guide assembly out of housing.

10-7. FRONT AND REAR DIFFERENTIAL MAINTENANCE (Contd)

NOTE

Assistant will help with step 4.

4. Lift differential carrier (1) straight up from axle housing (5).
5. Lower differential carrier (1) on work bench.
6. Remove chain and lifting device from differential carrier (1).

b. Cleaning and Inspection

WARNING

- Drycleaning solvent is flammable and will not be used near open flame. Use only in well-ventilated places. Failure to do so may result in injury to personnel.
- Eye protection is required when using wire brush for cleaning. Failure to do this may result in injury to personnel.

1. Clean sealing compound from differential carrier flange (4) and axle housing (5) mating surfaces and mounting studs (6) using a wire brush and drycleaning solvent.
2. Inspect differential carrier flange (4) and axle housing (5) mating surfaces for cracks, nicks, and burrs. Minor nicks and burrs can be repaired with crocus cloth. Cracks and large nicks or burrs require part replacement.
3. Inspect axle housing mounting studs (6) for broken, bent, and missing studs and cross-threaded and stripped threads. Replace or repair axle housing mounting studs (6) if more damaged or missing, refer to para. 2-10.

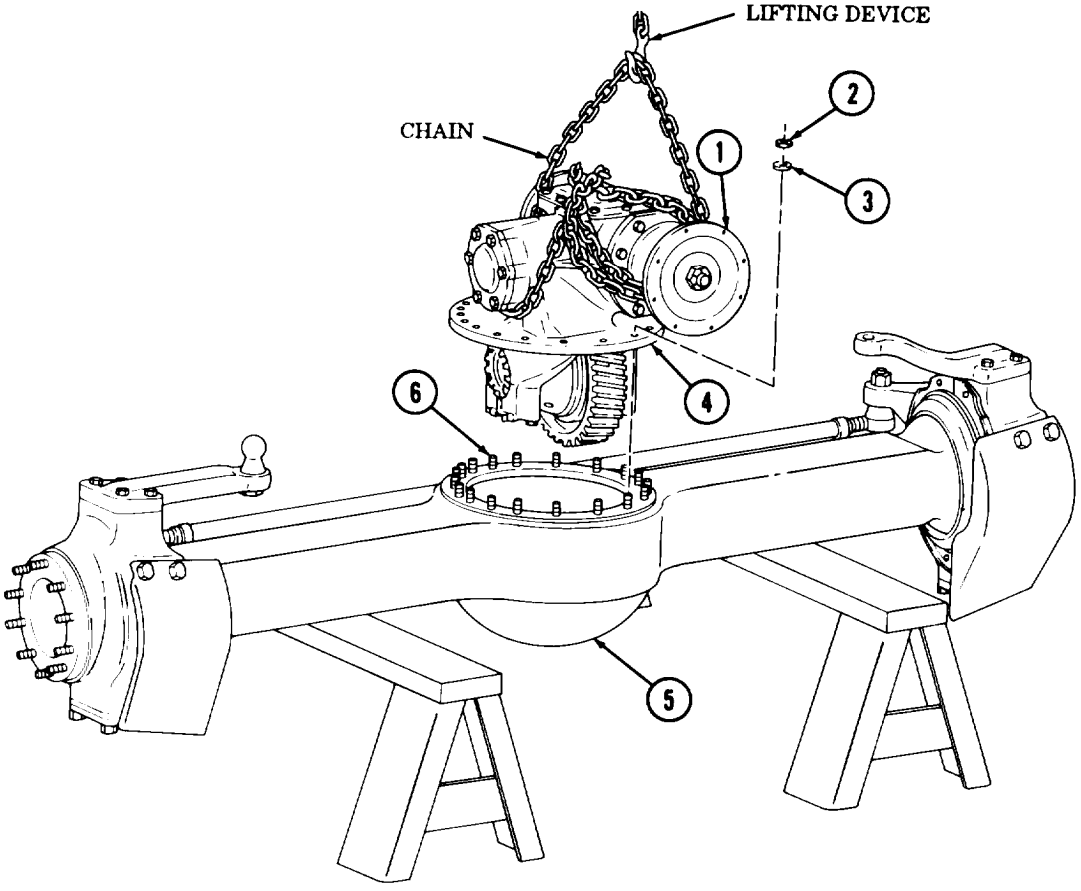

10-7. FRONT AND REAR DIFFERENTIAL MAINTENANCE (Contd)

c. Installation

NOTE

Differential flange and axle housing mating surfaces must be absolutely clean before applying new sealing compound.

1. Apply a generous even bead of sealing compound around differential earner flange (4) and axle housing (5) mating surfaces and around each axle housing mounting stud (6).

WARNING

All personnel must stand clear during lifting operations. A snapped chain, swinging or shifting load may cause injury or death to personnel.

2. Attach chain to differential carrier (1).

CAUTION

When installing carrier assembly onto axle housing, use care not to damage mounting studs. Assistant will guide assembly onto housing.

NOTE

Assistant will help with step 3.

3. Using lifting device, position differential carrier (1) over axle housing (5). Ensure orientation of differential carrier (1) is correct in relation to axle housing (5) for particular axle assembly.
4. Install differential earner (1) on mounting studs (6) and axle housing (5) with eighteen washers (3) and nuts (2). Tighten nuts (2) 160-205 lb-ft (217-278 N•m).
5. Remove chain and lifting device from differential carrier (1).

10-7. FRONT AND REAR DIFFERENTIAL MAINTENANCE (Contd)

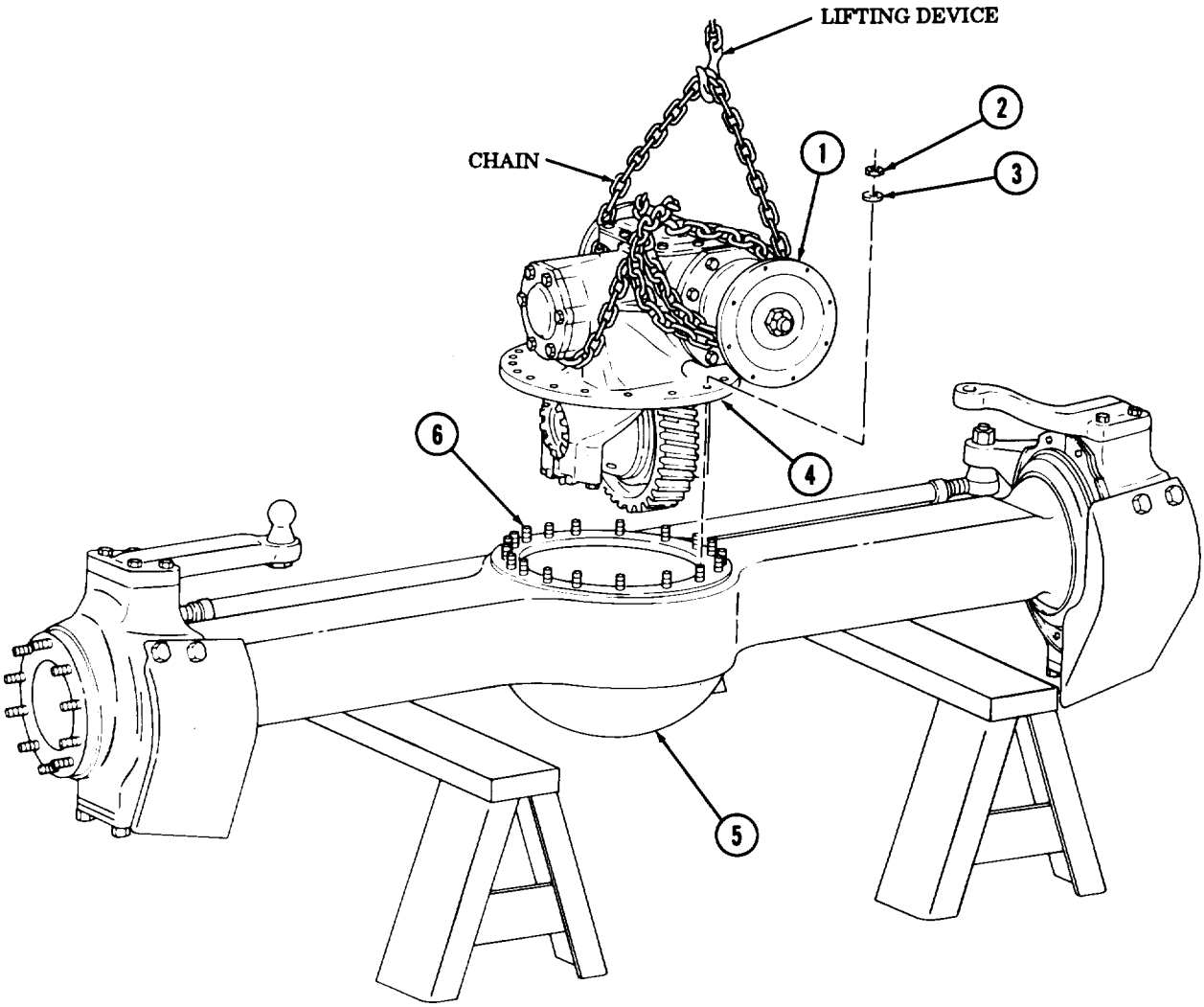

FOLLOW-ON TASKS:
- Install axle assembly (para. 10-2 or 10-5).
- Install axle (TM 9-2320-260-20).
- Fill differential with lubricant (LO 9-2320-260-12).

10-8. DIFFERENTIAL AND DIFFERENTIAL CARRIER REPAIR

THIS TASK COVERS:

a. Disassembly
b. Cleaning, Inspection, and Repair
c. Assembly and Adjustment

INITIAL SETUP

APPLICABLE MODELS
All

SPECIAL TOOLS
Differential flange replacer (Appendix B, Item 60)
Bearing cup replacer (Appendix B, Item 98)
Bearing cup replacer (Appendix B, Item 99)

TOOLS
General mechanic's tool kit (Appendix B, Item 1)
Bearing preload scale (Appendix B, Item 32)
Wheel bearing nut wrench (Appendix B, Item 48)
Mechanical puller kit (Appendix B, Item 14)
Inside caliper micrometer (Appendix B, Item 9)
Vernier caliper (Appendix B, Item 33)
Outside caliper micrometer (Appendix B, Item 8)
Arbor press (Appendix B, Item 7)
2-1/4-in. socket, 1-in. dr. (Appendix B, Item 34)
Bearing installer/remover (Appendix B, Item 83)
Torque wrench, 1/2-in. dr. (Appendix B, Item 3)
Torque wrench, 3/4-in. dr. (Appendix B, Item 2)
Vise (Appendix B, Item 38)
Adapter, 3/4-in. to l-in. dr. (Appendix B, Item 19)
1-1/8-in. socket, 3/4-in. dr. (Appendix B, Item 37)
Soft-head hammer (Appendix B, Item 47)
Bearing adapter (Appendix B, Item 35)
Chain
Lifting device

MATERIALS/PARTS
Wear sleeve kit (Appendix D, Item 337)
Gasket and shim set (Appendix D, Item 485)
Bevel pinion gear spacer kit (Appendix D, Item 333)
Six lock washers (Appendix D, Item 215)
Locktab washer (Appendix D, Item 207)
Two cotter pins (Appendix D, Item 25)
Two oil seals (Appendix D, Item 430)
Gasket (Appendix D, Item 150)
Six lockwashers (Appendix D, Item 223)
Crocus cloth (Appendix C, Item 53)
GAA grease (Appendix C, Item 14)
Lubricating oil (Appendix C, Item 22)
Blue oil base pigment (Appendix C, Item 26)
Sealing compound (Appendix C, Item 43)
Sealing compound (Appendix C, Item 44)
Sealing compound (Appendix C, Item 42)
Twine (Appendix C, Item 54)
White carbonate pigment (Appendix C, Item 27)
Safety wire (Appendix C, Item 59)

REFERENCES (TM)
LO 9-2320-260-12
TM 9-214
TM 9-2320-260-20
TM 9-2320 -260-34P-1

EQUIPMENT CONDITION
Differential and carrier assembly removed (para. 10-7).

GENERAL SAFETY INSTRUCTIONS
- Keep fire extinguisher nearby when using drycleaning solvent.
- Compressed air source will not exceed 30 psi (207 kPa).
- Eyeshields must be worn when cleaning with compressed air.

a. Disassembly

NOTE

Front and rear differentials are repaired the same way.

1. Remove safety wires (1) from two screws (2) and four screws (4). Discard safety wires (1).
2. Remove two screws (2) and adjusting nut locks (3) from beating caps (6).

10-8. DIFFERENTIAL AND DIFFERENTIAL CARRIER REPAIR (Contd)

CAUTION

Scribe bearing caps and saddles for installation. These items are machine matched and damage will result if they are intermixed.

3. Remove four screws (4), washers (5), and two bearing caps (6) from differential earner housing (11).

NOTE

Tag bearings and races as matched parts for inspection and installation.

4. Remove two adjusting nuts (9) and bearing races (8) from bearing saddles (10) and caps (6).
5. Remove differential gear assembly (7) from differential carrier housing (11) and bearing saddles (10).
6. Using puller, remove two tapered roller bearings (12) from differential housings (13).
7. Remove safety wire (18) from eight slotted nuts (19). Discard safety wire (18).

CAUTION

Two gear housings and helical drive gear must be scribed for installation. These items are machine matched and damage may result if they are intermixed.

8. Remove eight slotted nuts (19) and screws (22) from two differential housings (13). Mark two differential housings (13) and helical ring gear (16) for installation.
9. Remove four bevel spider gears (20), thrust washers (21), and spider (17) from differential housing (13).
10. Remove two bevel side gears (15) and thrust washers (14) from differential housings (13).

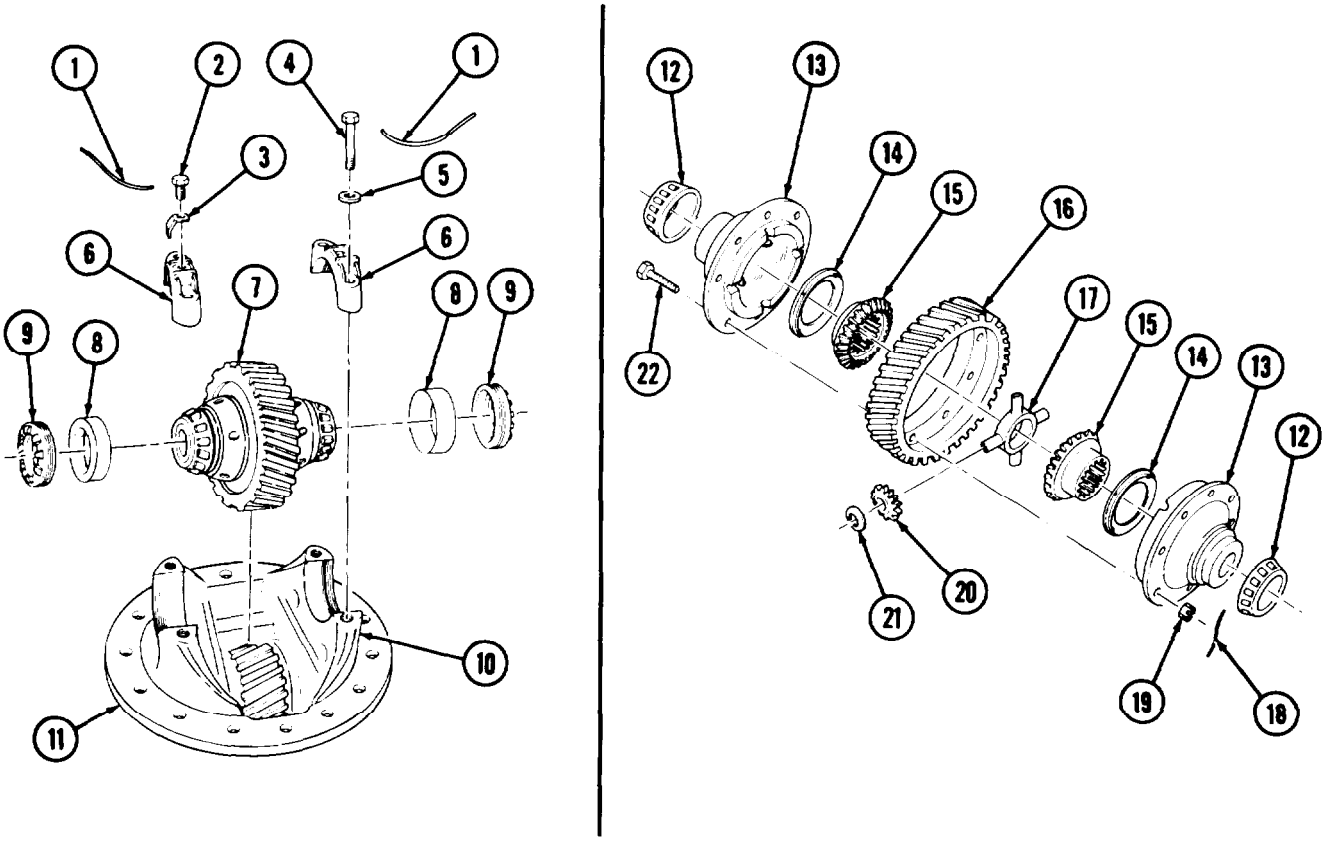

10-8. DIFFERENTIAL AND DIFFERENTIAL CARRIER REPAIR (Contd)

11. Remove two cotter pins (1), nuts (2), and companion flanges (3) fro mainshaft (4). Discard cotter pins (1).
12. Remove six screws (9) and lockwashers (10) from rear bearing cover (8). Discard lockwashers (10).
13. Remove rear bearing cover (8), gasket (6), and thrust washer (5) from differential earner housing (11). Discard gasket (6).
14. Remove oil seal (7) from rear bearing cover (8). Discard oil seal (7).
15. Remove eight screws (16) and washers (17) from front bearing cover (15).
16. Remove front bearing cover (15) and gasket (12) from differential carrier housing (11). Discard gasket (12).
17. Using puller, remove oil seal (13) and gasket (14) from front bearing cover (15). Discard oil seal (13) and gasket (14).

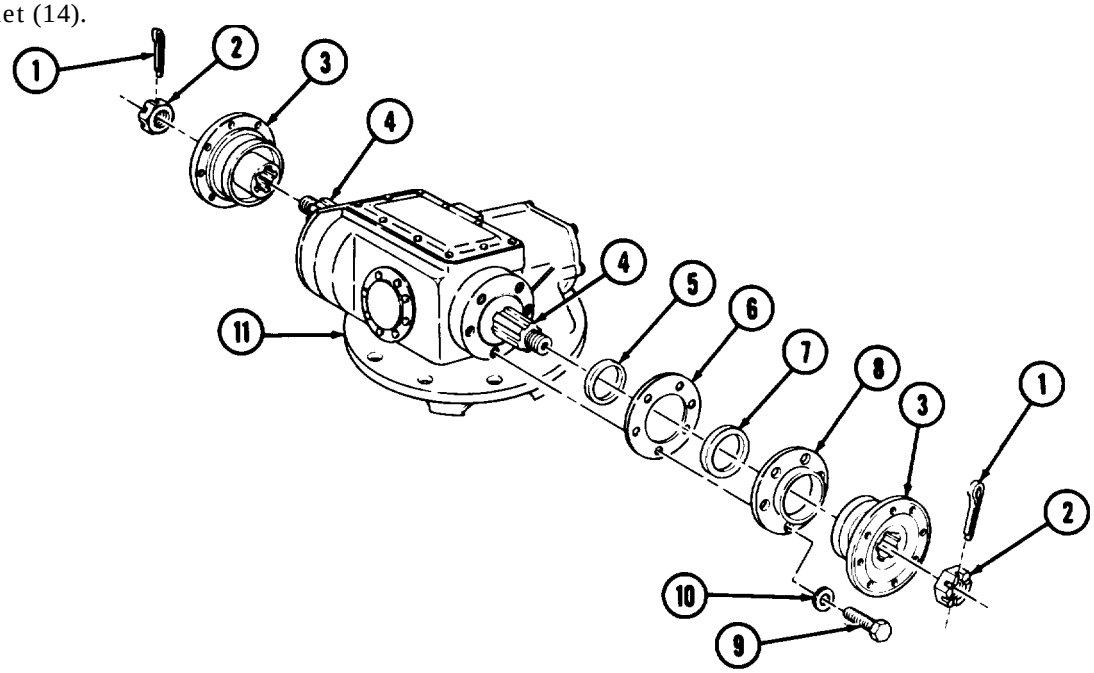

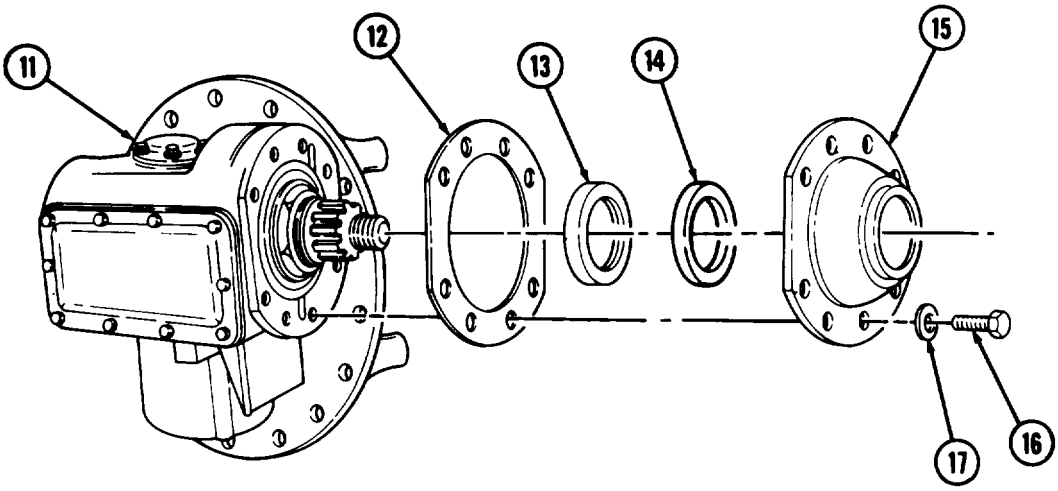

10-8. DIFFERENTIAL AND DIFFERENTIAL CARRIER REPAIR (Contd)

18. Remove mainshaft and pinion gear assembly (4) from differential earner housing (11).

NOTE

Tag and retain shims for measurement and installation.

19. Using bearing remover, remove shims (19) from front of differential earner housing (11).
20. Remove bearing (18) from rear of differential carrier housing (11).
21. Place mainshaft (4) in soft-jawed vise.
22. Using puller, remove rear bearing race (24) from rear of mainshaft (4).
23. Open tab(s) on locktab washer (21) and remove outer nut (20), locktab washer (21), keywasher (22), and inner nut (23) from mainshaft (4). Discard locktab washer (21).

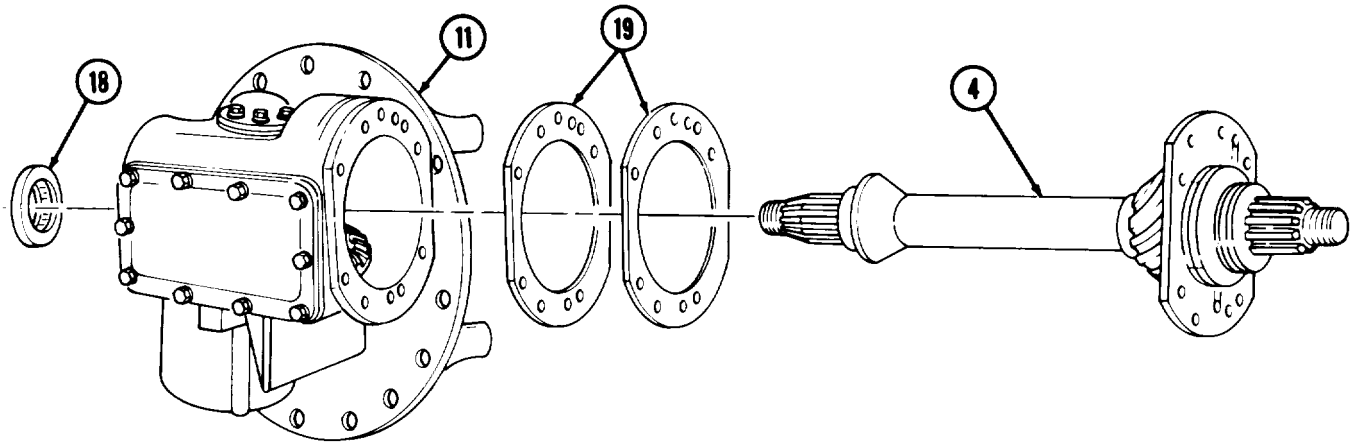

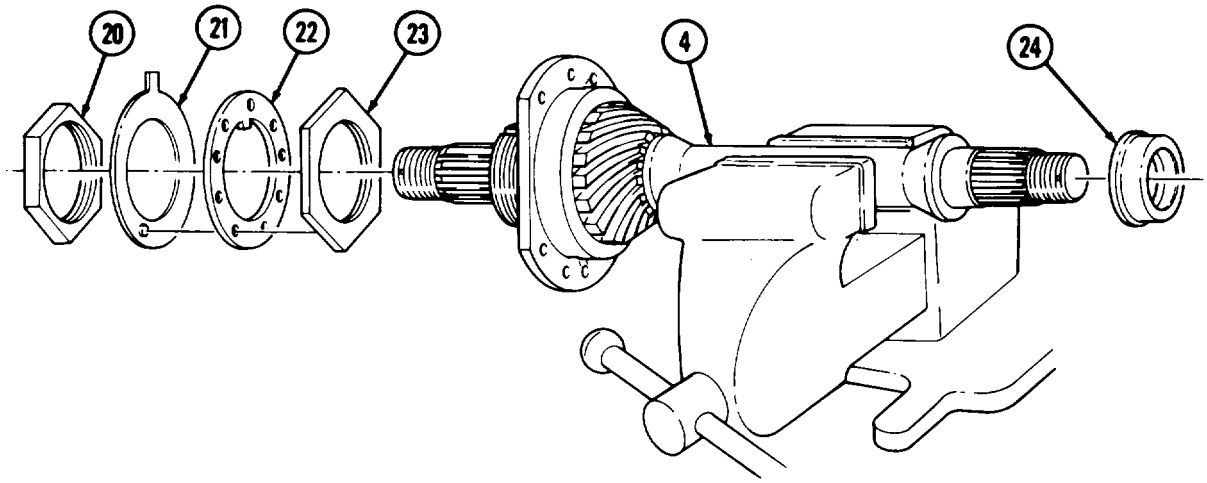

10-8. DIFFERENTIAL AND DIFFERENTIAL CARRIER REPAIR (Contd)

NOTE

Bearings and races are match sets and must be kept together for inspection and installation.

24. Using arbor press, remove outer bearing (1), retainer (3), and spacer (5) from pinion gear (6) and mainshaft (7).

NOTE

Races may require light tapping to remove from retainer.

25. Using bearing cup remover and replacer, remove races (2) and (4) from retainer (3).
26. Remove mainshaft (7) from vise.
27. Using arbor press, remove pinion gear (6) with bearing (8) from mainshaft (7).
28. Using puller, remove bearing (8) from pinion gear (6).

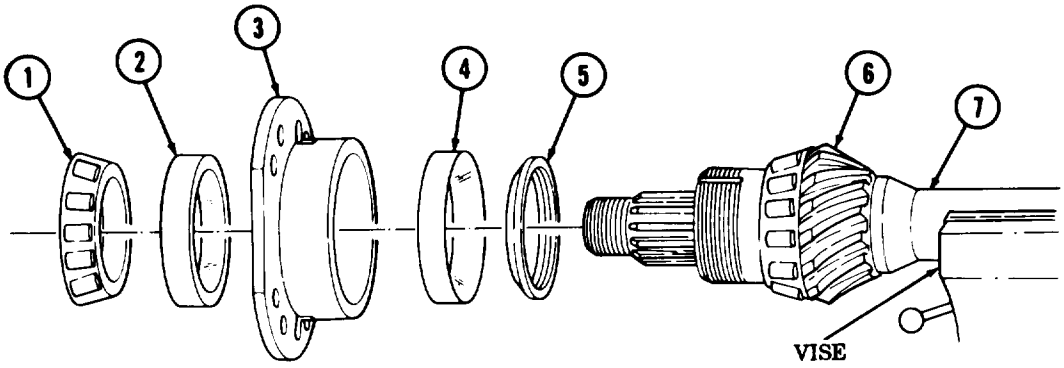

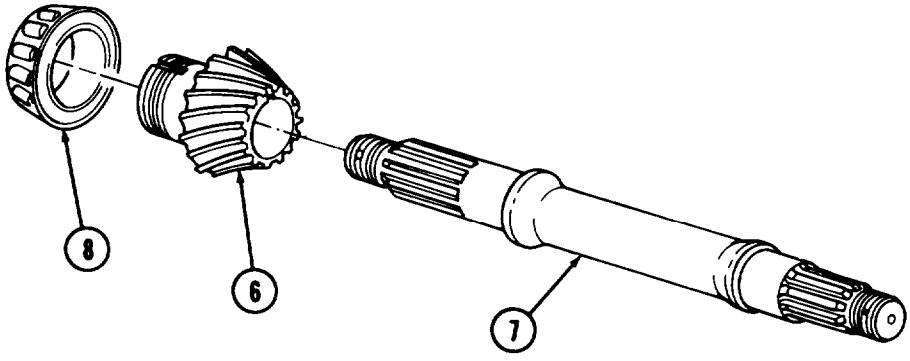

10-8. DIFFERENTIAL REPAIR (Contd)

29. Remove eight screws (9) and washers (10) from side cover (11).
30. Remove side cover (11) and gasket (12) from differential carrier housing (13). Discard gasket (12).
31. Remove six screws (17) and lockwashers (16) from bearing retaining plate (15). Discard lockwashers (16).

NOTE

Record number and thickness of shims for installation.

32. Remove bearing retaining plate (15) and shims (14) from differential carrier housing (13). Discard shims (14).
33. Remove safety wire (22) from three screws (23) on retaining plate (21). Discard safety wire (22).
34. Remove three screws (23) and retaining plate (21) from shaft (18).
35. Install two puller screws (24) in two tapped jacking holes (25) in bearing cap (20) and remove bearing cap (20). Tighten screws (24) evenly while removing bearing cap (20). Remove puller screws (24) from bearing cap (20).

NOTE

Tag and retain shims for measurement and installation.

36. Remove shims (19) from differential carrier housing (13).
37. Using arbor press, remove two bearings (27) and races (26) from bearing cap (20).

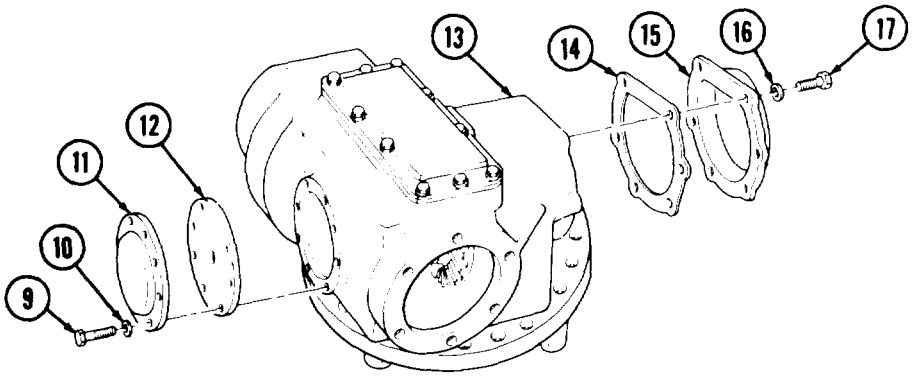

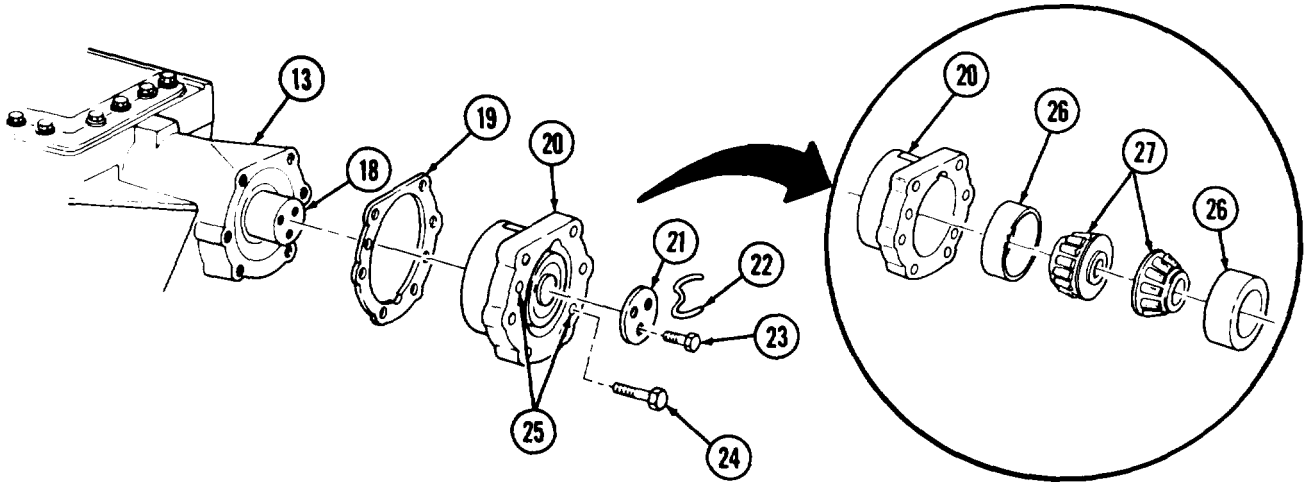

10-8. DIFFERENTIAL AND DIFFERENTIAL CARRIER REPAIR (Contd)

38. Remove ten screws (1), washers (5), access cover (2), and gasket (3) from differential carrier housing (4). Discard gasket (3).
39. Place two soft-iron spacers (10) between bevel ring gear (6) and differential earner housing (4).
40. Using arbor press, remove helical pinion gear (7) from bevel ring gear (6).
41. Remove spacer (9) and machine key (8) from shaft of helical pinion gear (7).
42. Remove bevel ring gear (6) with bearing (11) from differential carrier housing (4).
43. Remove setscrew (13) from differential carrier housing (4).

CAUTION

Drive bearing sleeve out by tapping evenly. Scoring will occur if sleeve tilts in housing.

44. Using puller, remove bearing sleeve (12) from differential carrier housing (4).
45. **Using puller, remove bearing (11) from bevel ring gear (6).**

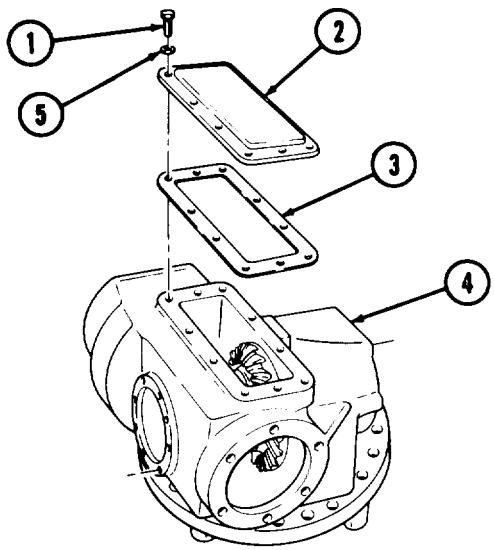

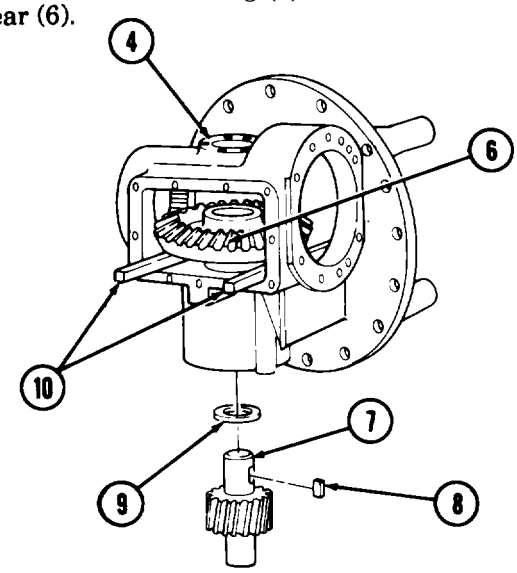

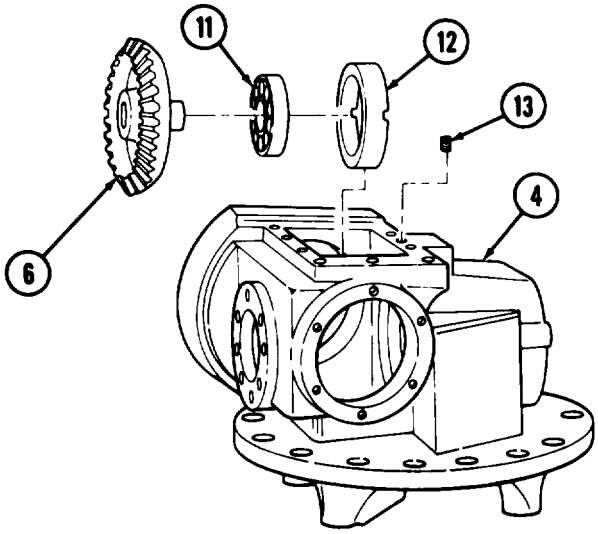

10-8. DIFFERENTIAL AND DIFFERENTIAL CARRIER REPAIR (Contd)

b. Cleaning, Inspection, and Repair

1. For general cleaning instructions, refer to para. 2-8.
2. For general inspection instructions, refer to para. 2-9.

CAUTION

Differential earner housing and cap, bearings and bearings are machined or matched parts and damage may result if they are intermixed. Replace all matched parts as sets if damaged.

3. Inspect differential carrier housing (14) and caps (16) for scores, cracks, distortion, breaks, burrs, and. wear. Repair minor damage, refer to para. 2-10. Replace differential earner housing (14) and caps (16) if either part is damaged.
4. Inspect two adjusting nuts (15) for cracks, breaks, missing locking lugs, and damaged threads. Replace adjusting nut(s) (15) if cracked, broken, locking lugs are missing, or threads are damaged.

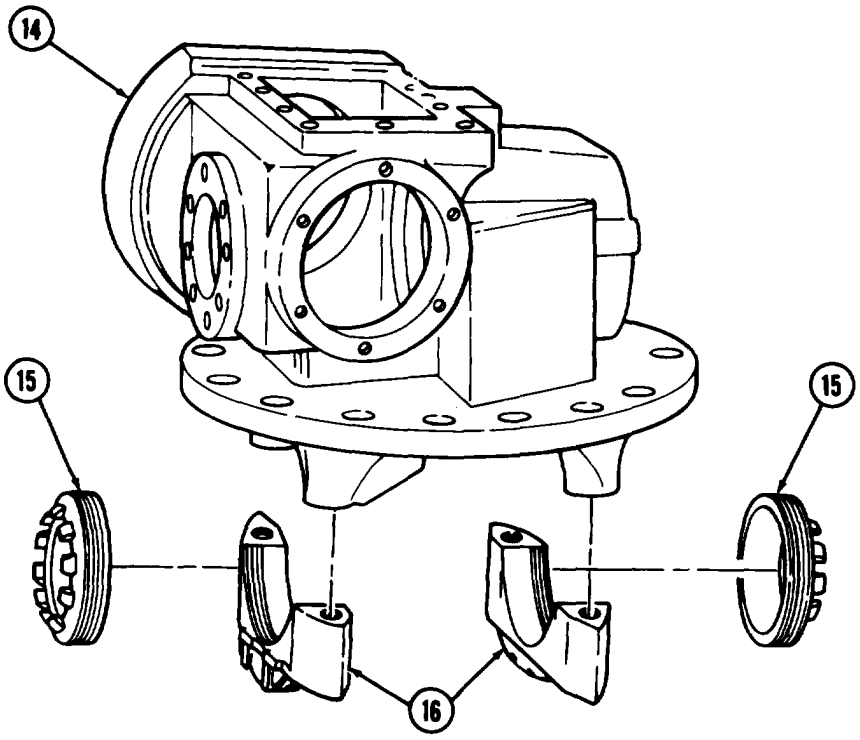

10-8. DIFFERENTIAL AND DIFFERENTIAL CARRIER REPAIR (Contd)

NOTE

Replacement of entire differential gear assembly is required if either helical ring gear, spider, spider gears, bevel gears, and thrust washer fail inspection.

5. Inspect two bearings (2) and races (1). Refer to TM 9-214. Replace bearing (2) and race (1) as a set if either part fails inspection.
6. Inspect two differential gear housings (4) for chips, burrs, cracks, pitting, scoring, and breaks. Repair minor damage, refer to para. 2-10. Replace entire differential gear assembly if differential gear housings (4) are damaged.
7. Measure inside diameter of bearing races (5) and outside diameter of differential gear housing hubs (3). The difference between measurements, press fit, must be within 0.0015-0.0035 in. (0.0381-0.0889 mm). Replace entire differential gear assembly if press fit is not within limits.
8. Inspect four thrust washers (12), bevel spider gears (11), two thrust washers (6), bevel side gears (7), spider (9), and helical ring gear (8) for cracks, breaks, chips, burrs, scoring, and pitting. Repair minor damage, refer to para. 2-10. Replace entire differential gear assembly if either part fails inspection.
9. Measure outside diameter of four spider arms (10). Measurement should be 1.122-1.123 in. (28.50-28.52 mm). Replace entire differential gear assembly if spider arm(s) (10) are not within limits.
10. Measure inside diameter of four bevel spider gears (11). Measurement should be 1.128-1.130 in. (28.65-28.70 mm). Replace entire differential gear assembly if bevel spider gear(s) (11) are not within
11. Inspect two bearings (19) and races (18). Refer to TM 9-214. Replace bearing (19) and race (18) as a set if either part fails inspection.
12. Inspect bevel ring gear (13), sleeve (15), spacer (16), and helical pinion gear (17) for chips, breaks, cracks, burrs, nicks, and scores. Repair minor damage, refer to para. 2-10. Replace bevel ring gear (13), sleeve (15), spacer (16), and helical pinion gear (17) if damaged.
13. Measure inside diameter of bearing races (20) and outside diameter of pinion gear shaft (2 1). The difference between measurements, press fit, must be within 0.0000-0.0015 in. (0.0000-0.0381 mm). Replace helical pinion gear (17) and bearings(s) (19) if press fit is not within limits.
14. Inspect bearing (14). Refer to TM 9-214. Replace bearing (14) if damaged.
15. Measure outside diameter of bevel ring gear hub (13) and inside diameter of bearing race (22). The difference between measurements, press fit, must be within 0.0006-0.0011 in. (0.015-0.028 mm). Replace bevel ring gear (13) and bearing (14) if press fit is not within limits.
16. Measure outside diameter of bearing (14) and inside diameter of spacer (15). The difference between measurements, press fit, must be within 0.0030-0.0058 in. (0.076-0.147 mm). Replace bearing (14) and sleeve (15) if press fit is not within limits.

10-8. DIFFERENTIAL AND DIFFERTIAL REPAIR (Contd)

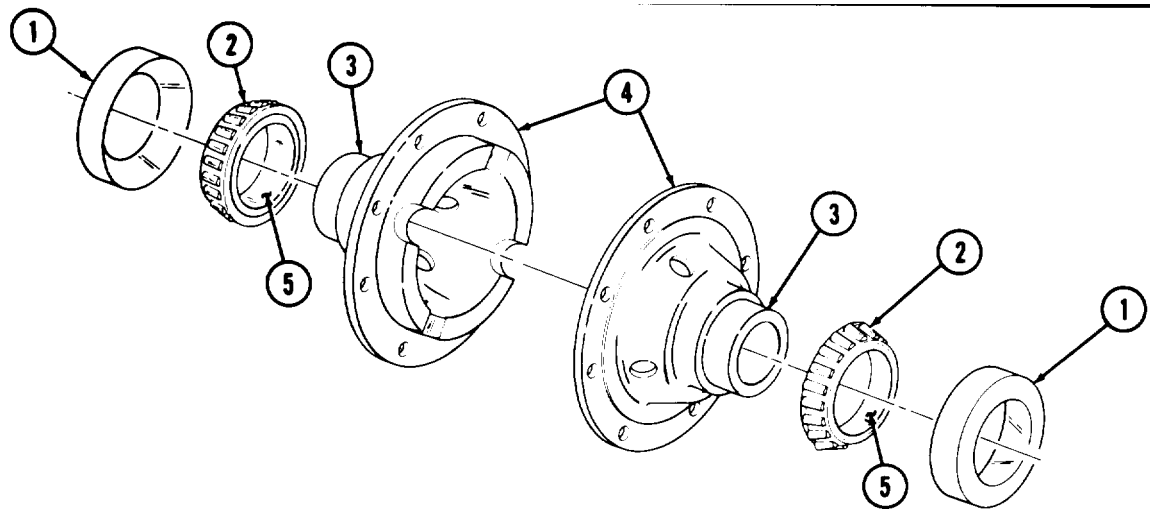

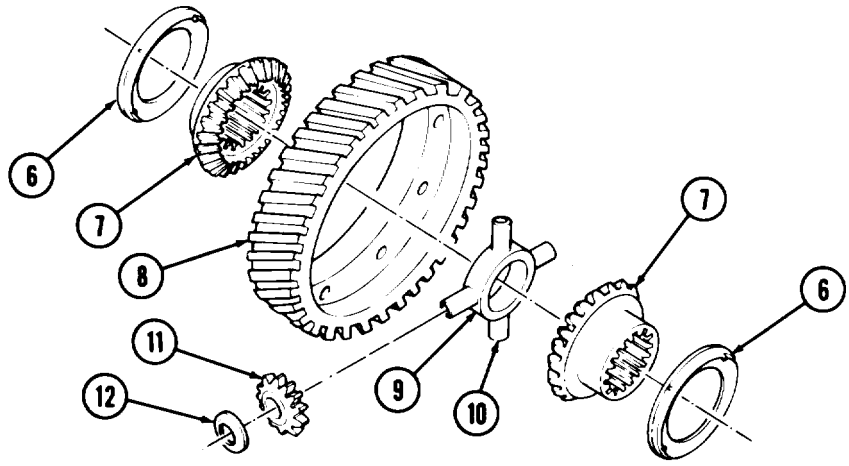

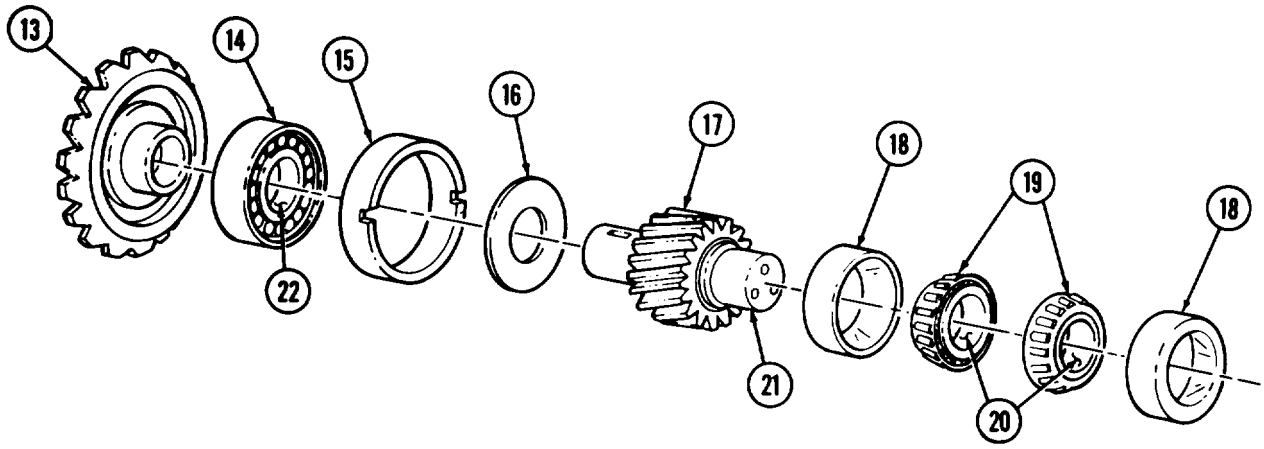

10-8. DIFFERENTIAL AND DIFFERENTIAL CARRIER REPAIR (Contd)

17. Inspect two bearings (1) and races (2), bearing (6), and race (5). Refer to TM 9-214. Replace bearings (1) or (6) with appropriate races (2) or (5) if damaged.
18. Inspect bevel pinion gear (3) and mainshaft (4) for chips, bums, breds, knds, and scoring. Repair minor damage, refer to para. 2-10. Replace bevel pinion gear (3) or mainshaft (4) if damaged.
19. Measure inside diameter of bearing race (2) and outside diameter of middle step (8) of bevel pinion gear (3). The difference between measurements, press fit, must be within 0.0000-0.0020 in. (0.000-0.051 mm). Replace baring race (2) and bevel pinion gear (3) if press fit is not within limits.
20. Measure inside diameter of bearing race (10) and outside diameter of front step (9) of bevel pinion gear (3). The difference between measurements, press fit, must be within 0.0010-0.0025 in. (0.025-0.064 mm). Replace beating (1) and bevel pinion war (3) if press fit is not within limits.
21. Measure inside diameter of bearing race (5) and outside diameter of mainshaft shoulder (7). The difference between measurements, press fit, must be within 0.0006-0.0019 in. (0.015-0.048 mm). Replace bearing race (5) and mainshaft (4) if press fit is not within limits.
22. Measure outside diameter of bearing (6) and inside diameter of rear bore (12) of differential earner housing (11). The difference between measurements, press fit, must be +0.0009 to -0.0007 in. (+0.023 to -0.018 mm). Replace bearing (6) and differential carrier housing (11) if press fit is not within limits.
23. Inspect companion flange (13), deflector (14), and wear sleeve (15) for cracks, breaks, bends, scoring, and wear. Replace companion flange (13), deflector (14), or wear sleeve (15) if cracked, broken, bent, scored, or worn. Follow instructions in wear sleeve kit, P/N 12375353, for replacement of wear sleeve (15).

10-8. DIFFERENTIAL AND DIFFERENTIAL CARRIER REPAIR (Contd)

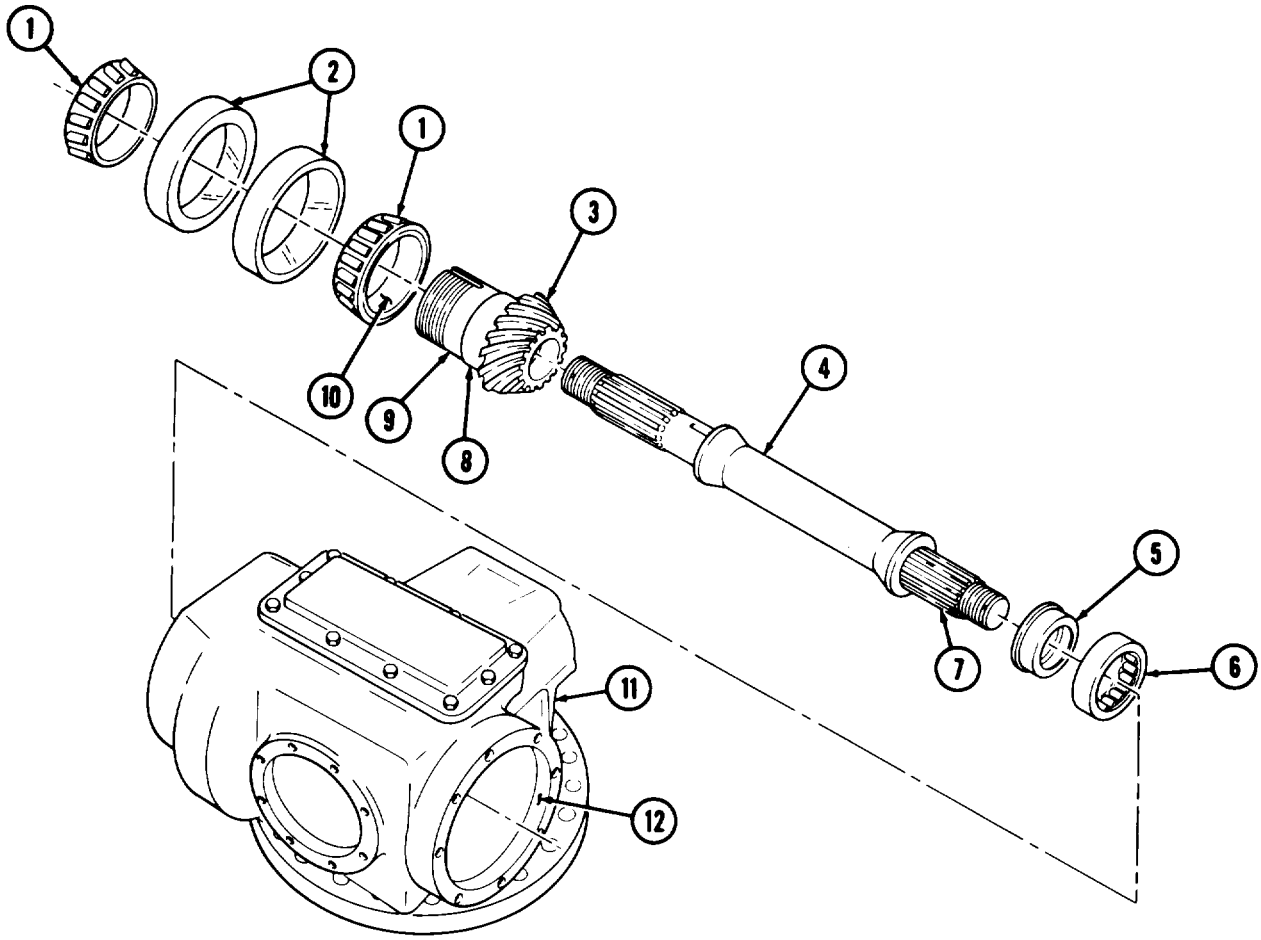

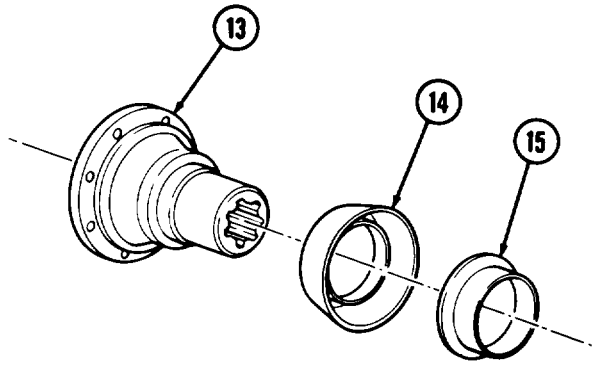

10-8. DIFFERENTIAL AND DIFFERENTIAL CARRIER REPAIR (Contd)

c. Assembly and Adjustment

NOTE

Coat all bearings and gears with lubricating oil during reassembly.

1. Using bearing cup remover and replacer, install inner bearing race (3) and outer bearing race (1) in retainer (2). Thick edges of races (1) and (3) must be toward center of retainer (2).
2. Install bearing (4) on hub of bevel pinion gear (6). Thick inner race (10) must be seated against back edge (5) of teeth on bevel pinion gear (6).

NOTE

White carbonate pigment is used as a high pressure lubricant.

3. Coat long splined end (7) of mainshaft (9) with white carbonate pigment.
4. Position bevel pinion gear (6) over mainshaft (9) ensuring internal splines in bevel pinion gear (6) aline with splined end (7), and press bevel pinion gear (6) and bearing (4) onto mainshaft (9). Nose of bevel pinion gear (6) must seat against shoulder (8).
5. Place mainshaft (7) in soft-jawed vise.

NOTE

Collar is used to set preload on bevel pinion gear bearings. Ensure collar removed in disassembly is installed for preload test.

6. Install spacer (14) on hub (15) of bevel pinion gear (6) next to bearing (16).
7. Position small end (13) of retainer (12) over hub (15) and bearing (16) and place bearing (11 in retainer (12) over hub (15).

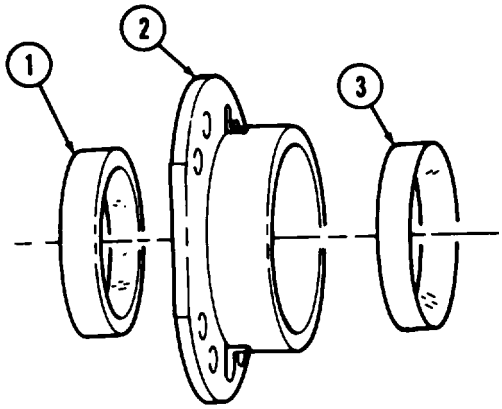

10-8. DIFFERENTIAL AND DIFFERENTIAL CARRIER REPAIR (Contd)

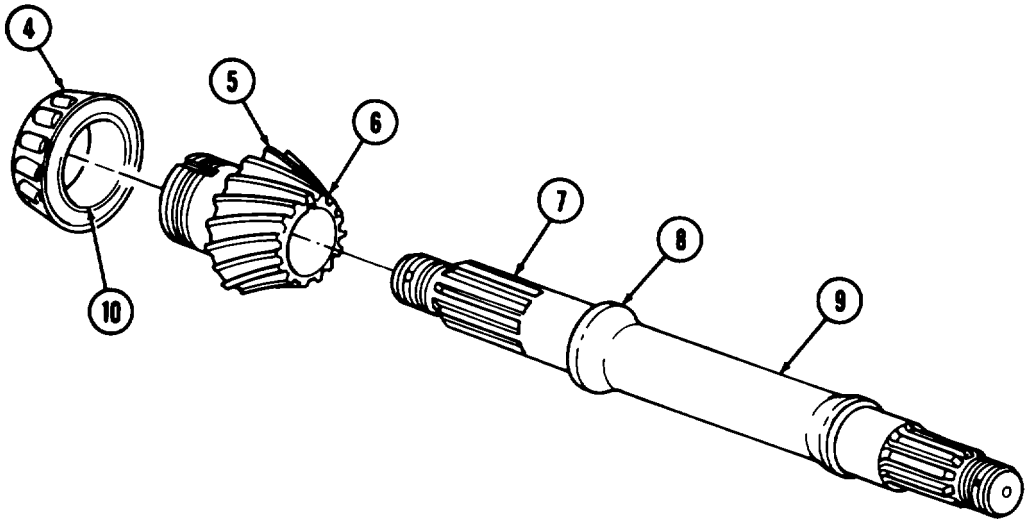

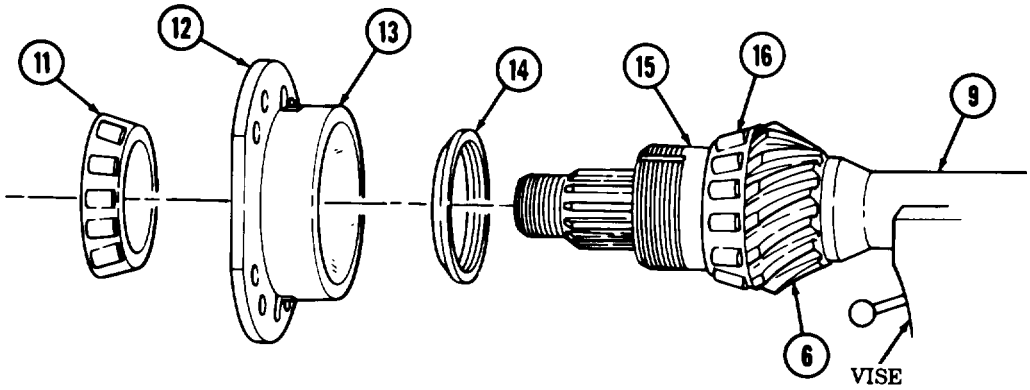

10-8. DIFFERENTIAL AND DIFFERENTIAL CARRIER REPAIR (Contd)

8. Install inner nut (4) on threaded portion of hub (5) of bevel pinion gear (7). Ensure stud (9) on inner nut (4) is facing away from retainer (6) and bevel pinion gear (7). Tighten inner nut (4) 800-1000 lb-ft (1085-1356 N•m).
9. Install keywasher (3) on hub (5). Ensure hole in keywasher (3) alines over stud (9) Of inner nut (4).
10. Install new locktab washer (2) on hub (5). Ensure stud (9) sets into a hole in keywasher (3).
11. Install outer nut (1) on hub (5). Tighten nut (1) 1000-1200 lb-ft (1356-1627 N•m).

NOTE

Pinion bearings must be preloaded for proper operation of differential assembly.

12. Wrap twine around retainer (6) and attach to bearing preload tester to determine bearing preload.
13. Observe pointer and pull on bearing preload tester until retainer(6) starts to rotate. Record reading.
14. If original bearings are installed, bearing preload pull must be 1.2-2.4 lb (0.54-1.09 kg). If torque method is used to measure bearing preload, torque must be 4-8 lb-in. (0.5-0.9 N•m).
15. If new bearings are installed, bearing preload pull must be 3.6-5.5 lb (1.63-2.50 kg). If torque method is used to measure bearing preload, torque must be 3.6-5.5 lb-in. (0.41-0.62 N•m).

NOTE

If preload is not within given limits, perform steps 16 through 19.

If preload is within given limits, go to step 21.

16. Remove outer nut (1), locktab washer (2), keywasher (3), and inner nut (4) from hub (5) of bevel pinion gear (7). Discard locktab washer (2).
17. Using arbor press, remove outer bearing (10), retainer (6), and spacer (11) from hub (5).
18. If preload value (steps 13, 14, and 15) exceed limits, use a thicker spacer (11) from bevel pinion gear spacer kit. If preload value is less than limits, use a thinner spacer (11).
19. Install parts on hub (5) following steps 5 through 11. Measure bearing preload using either twine and bearing preload tester or torque method. Repeat steps 16 through 19 until bearing preload is within limits of either step 14 or 15.
20. Remove mainshaft (8) from soft-jawed vise.

10-8. DIFFERENTIAL AND DIFFERENTIAL CARRIER REPAIR (Contd)

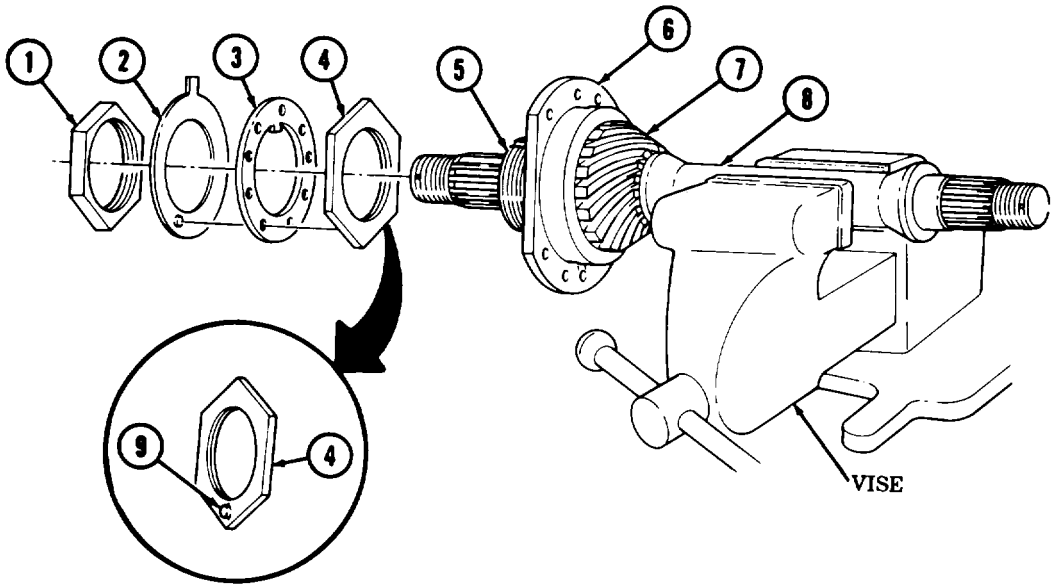

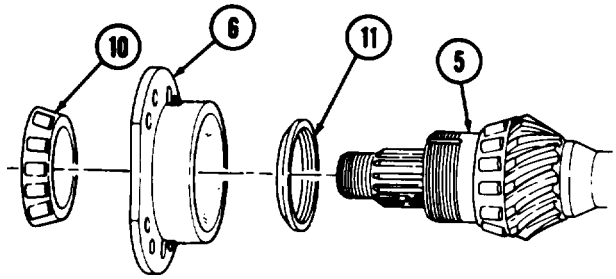

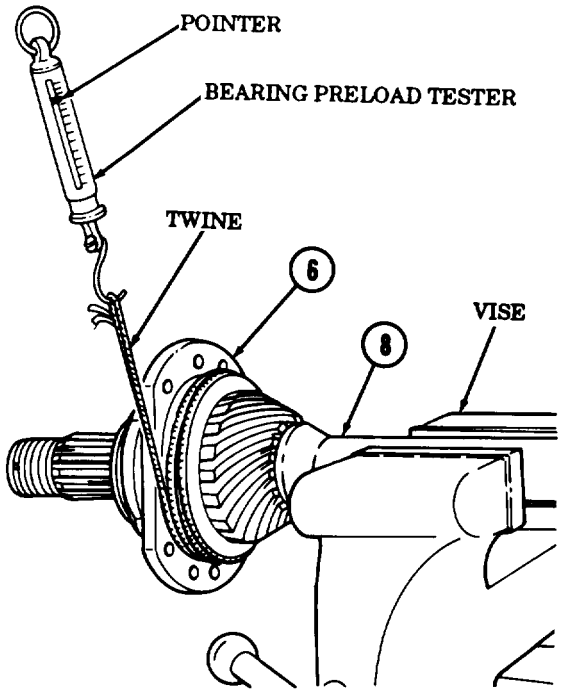

10-8. DIFFERENTIAL AND DIFFERENTIAL CARRIER REPAIR (Contd)

21. Bend tab(s) (4) on locktab washer over flats on outer nut (1).
22. Using arbor press, install rear bearing inner race (3) on short splined end of mainshaft (2).
23. Using arbor press, install bearing (7) in rear bore (5) of differential earner housing (6).
24. Install sleeve (8) in bore (13) with notches (10) toward shoulder of bore (13). Ensure hole (9) in sleeve (8) alines with hole (12) in differential carrier housing (6).
25. Install setscrew (11) through hole (12) until seated in sleeve (8).
26. Press bearing (15) on hub (20) of bevel ring gear (21). Bearing (15) must rest against shoulder (14) on hub (20).
27. Install spacer washer (16) on keyed end (19) end of helical pinion gear (18).
28. Install machine key (17) in keyed end (19) of helical pinion gear (18). Ensure exposed edges of machine key (17) are not burred after installation. Remove any burrs with fine mill file.

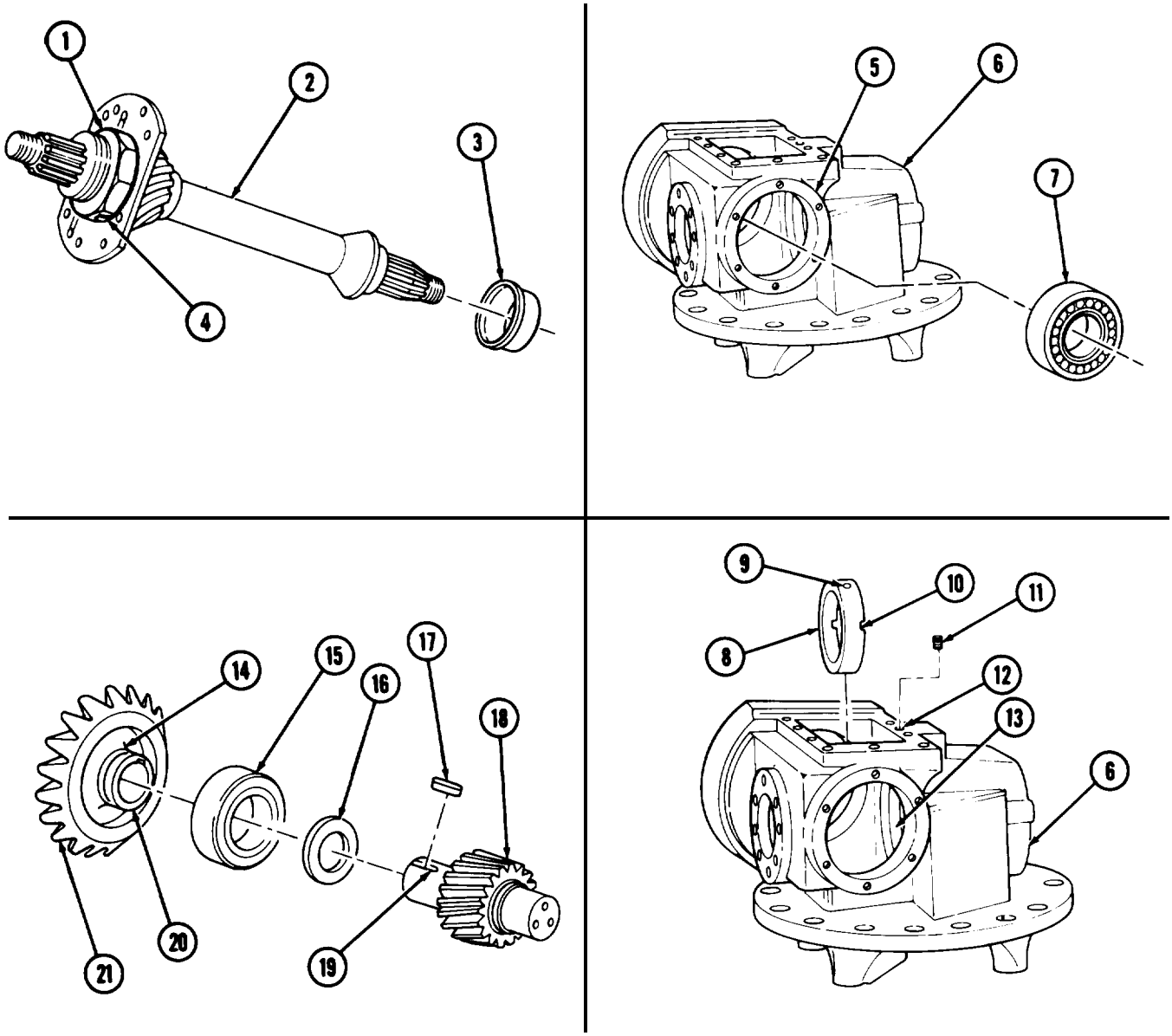

10-8. DIFFERENTIAL AND DIFFERENTIAL CARRIER REPAIR (Contd)

29. Place bevel ring gear (21) in differential carrier housing (6) with hub and bearing (15) pointing toward bore (22).

30. Support bevel ring gear (21) with two soft-iron semi-circular blocks (24). Use support adapter (23) as an alternate method.

NOTE

White carbonate pigment is used as high pressure lubricant.

31. Coat keyed end (19) of bevel ring gear (21) with pigment lubricant and aline over bore in bevel ring gear (21). Ensure machine key (17) is alined with keyway in bevel ring gear (21).

32. Using arbor press, install helical pinion gear (18) end (19) in bore of bevel ring gear. (21).

NOTE

Light tapping with soft-head hammer or use of arbor press maybe needed to install bearing.

33. Remove blocks (24), turn differential carrier housing (6) over, and push bearing (15) into sleeve (16).

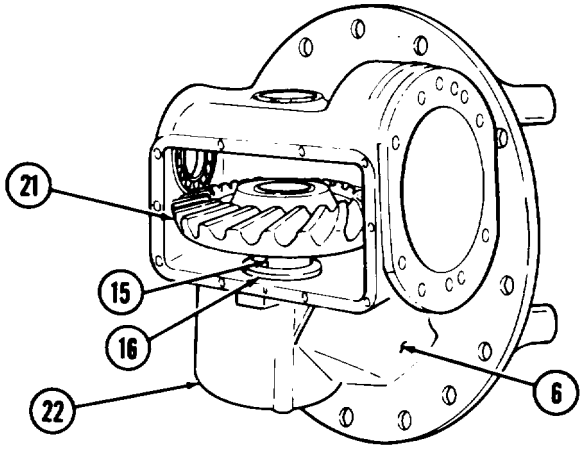

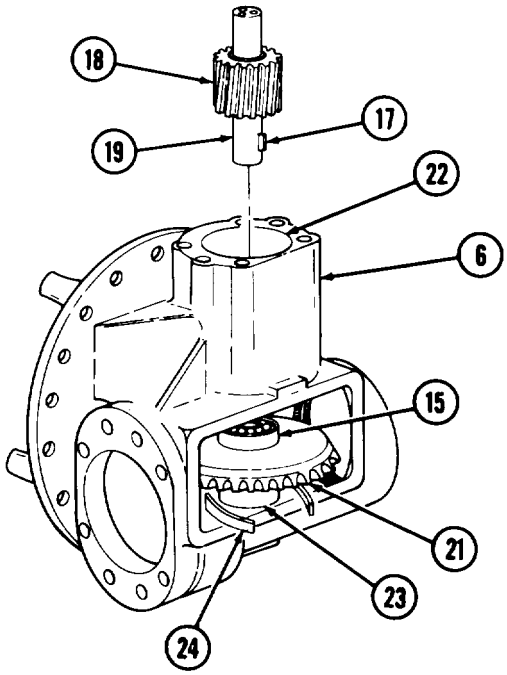

10-8. DIFFERENTIAL AND DIFFERENTIAL CARRIER REPAIR (Contd)

NOTE

Coat bearings and races with clean gear oil before installation.

34. Using bearing cup replacer, install race (2) in bearing cap (1). Thick edge of race (2) must be toward small end (6) of bearing cap (1).
35. Install bearings (3) and (4) and race (5) in bearing cap (1). Use installer/remover tool to seat race (5) in bearing cap (1). Wide edge of race (5) must face away from face of cap.
36. Starting with same thickness of shims (9) as removed, place shim (9) pack over shaft (8) and on differential carrier housing (7). Carefully aline holes in shims (9) to holes in earner housing (7).
37. Place bearing cap (1) over shaft (8) and press bearing cap (1) into position on shaft (8) to differential earner housing (7).
38. Install retaining plate (10) on shaft (8) with three screws (12). Tighten screws (12) 42-54 lb-ft (57-73 N•m) and install new safety wire (11) in screws (12).
39. Install new shims (13) and bearing cover (14) on differential earner housing (7) with six new lockwashers (15) and screws (16). Select shims (13) to be same thickness as removed. Tighten screws (16) 60-100 lb-ft (81-136 N•m).
40. To measure helical pinion gear (17) bearing preload, wrap twine around helical pinion gear (17) and attach to bearing preload tester. Observe pointer and pull on bearing preload tester until helical pinion gear (17) starts to rotate. Record value.

NOTE

- If preload is not within given limits, perform steps 41 through 45.
- If preload is within given limits, go to step 46.

41. Remove six screws (16), lockwashers (15), bearing cover (14), and shims (13) from differential carrier housing (7). Remove shims (13) carefully to avoid creasing or damaging shims.
42. If preload scale (or torque) reading of steps 40, 41, and 42 exceed limits, add shims (13).
43. If preload scale (or torque) reading of steps 40, 41, and 42 is less than lower limit, remove shims (13).
44. Install shims (13) and bearing cover (14) on differential carrier housing (7) with six screws (16) and new lockwashers (15). Carefully aline shims (13) with holes in differential carrier housing (7). Tighten screws (16) 60-100 lb-ft (81-136 N•m).
45. Repeat steps 40 through 43 as necessary.

10-8. DIFFERENTIAL AND DIFFERENTIAL CARRIER REPAIR (Contd)

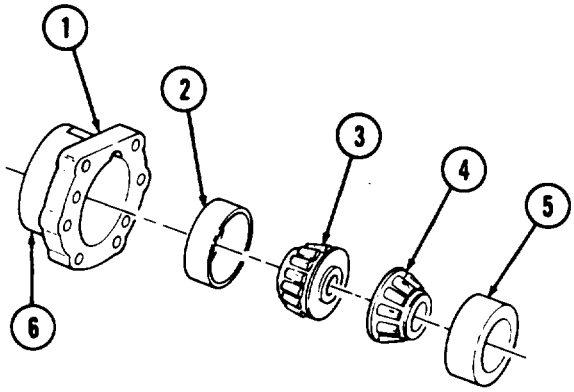

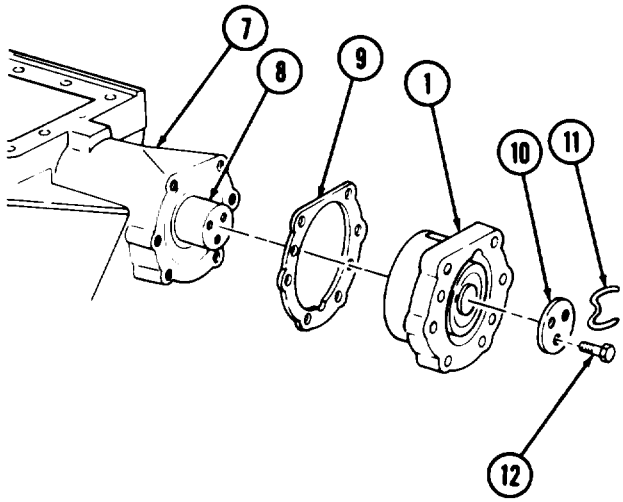

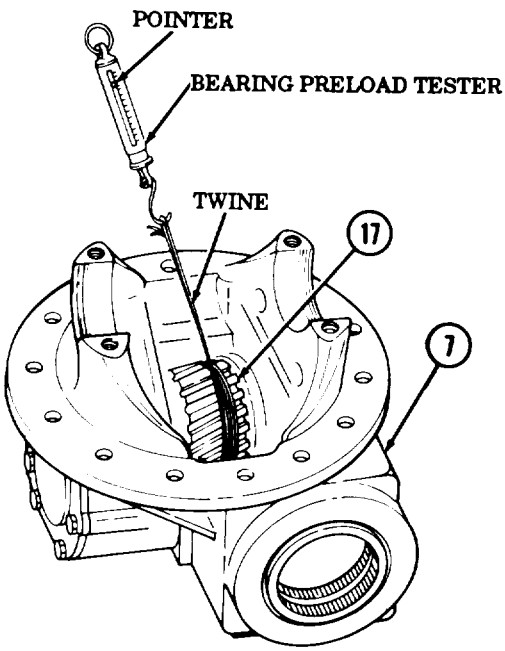

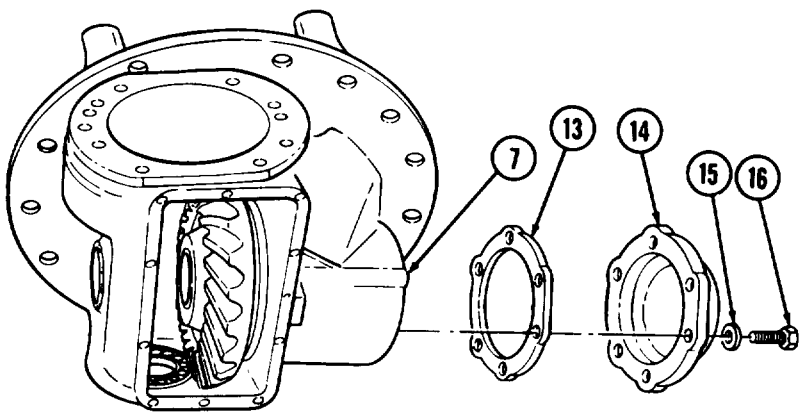

10-8. DIFFERENTIAL AND DIFFERENTIAL CARRIER REPAIR (Contd)

46. Position shims (2), same thickness pack as removed, on retainer (7) and slide mainshaft (4) into differential carrier housing (8). Aline inner race (3) with rear roller bearing (9).
47. Aline holes in shims (2), differential carrier housing (8), bore (1), and retainer (7) and install with eight washers (5) and screws (6). Tighten screws (6) 93-120 lb-ft (126-163 N·m).

CAUTION

Correct bevel ring gear and pinion gear contact pattern is critical to correct operation of differential and differential earner assembly. Incorrect contact pattern can result in noisy operation or premature failure of these two gears.

48. Check bevel ring gear (10) and pinion gear (11) tooth contact pattern by applying blue oil base pigment to at least three clean bevel ring gear (10) teeth. Turn mainshaft (4) for three full rotations of bevel ring gear (10).
49. Examine bevel ring gear (10) teeth contact pattern (13) with pinion gear (11). Pattern should be centered both ways on teeth (12) and cover over 2/3 of tooth (12) contact surface.

NOTE

- If pattern is not correct, perform steps 50 through 68.
- If pattern is correct, go to step 70.

50. If contact pattern resembles pattern (14), perform steps 54-57, 58, and 62-68.
51. If contact pattern resembles pattern (15), perform steps 54-57, 59, and 62-68.
52. If contact pattern resembles pattern (16), perform steps 54-57, 60, and 62-68.
53. If contact pattern resembles pattern (17), perform steps 54-57, 61, and 62-68.

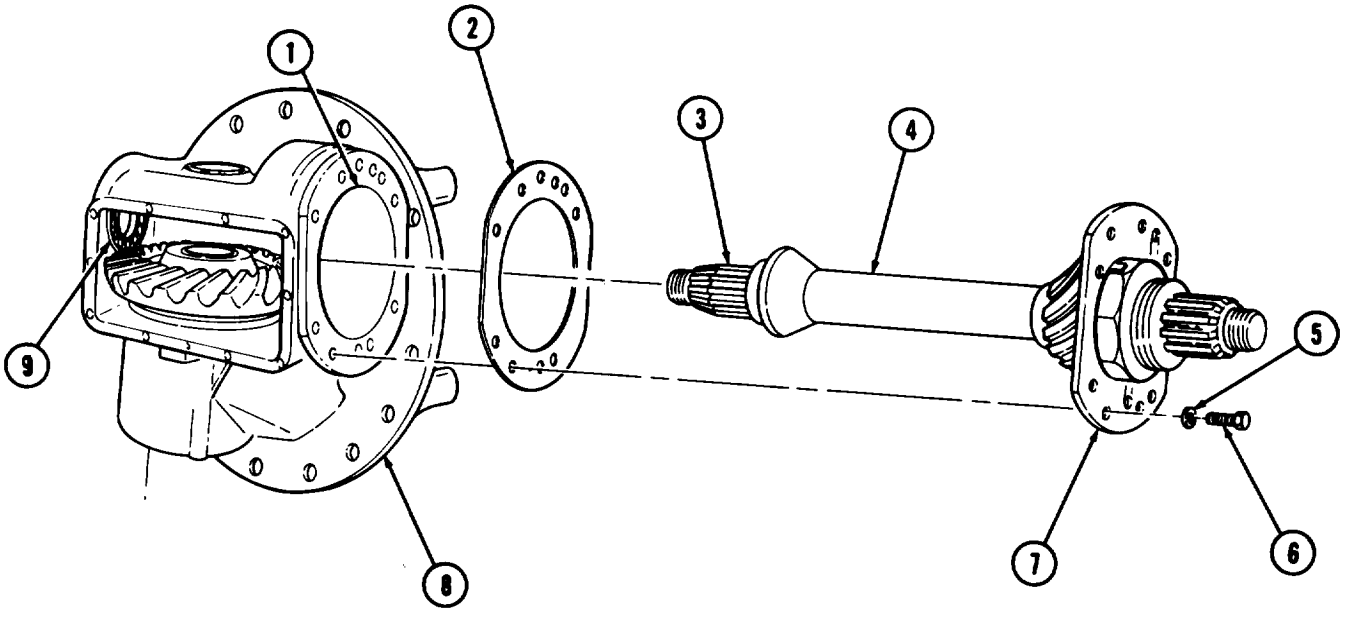

10-8. DIFFERENTIAL AND DIFFERENTIAL CARRIER REPAIR (Contd)

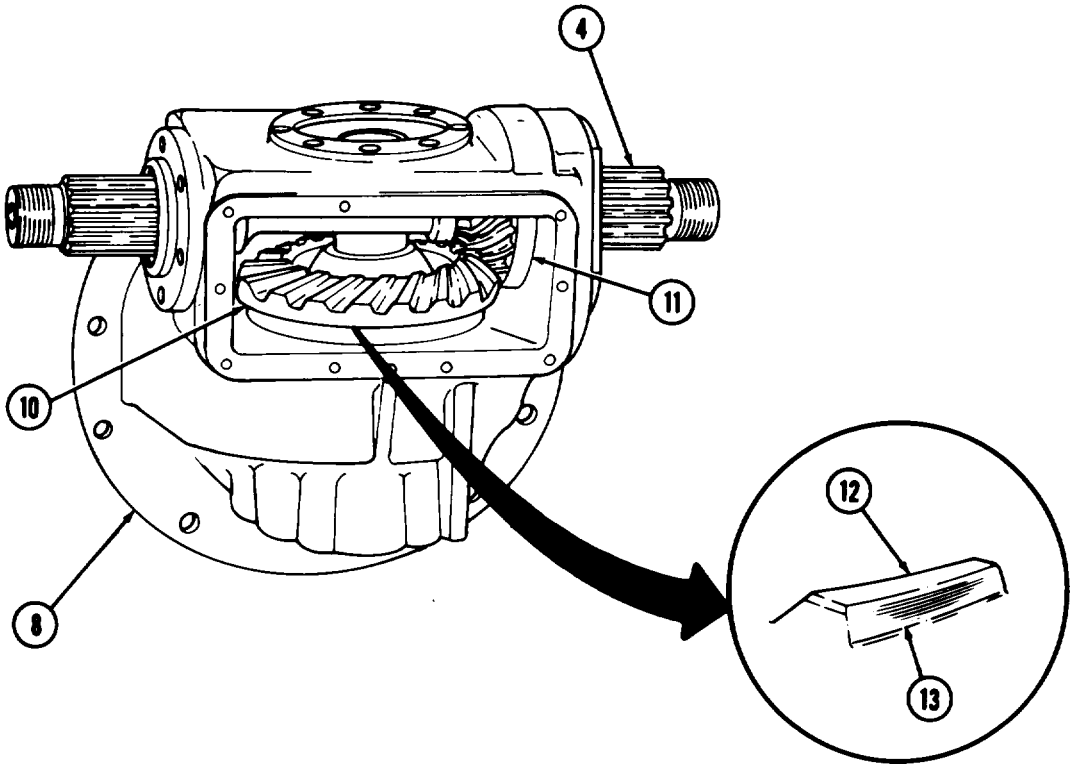

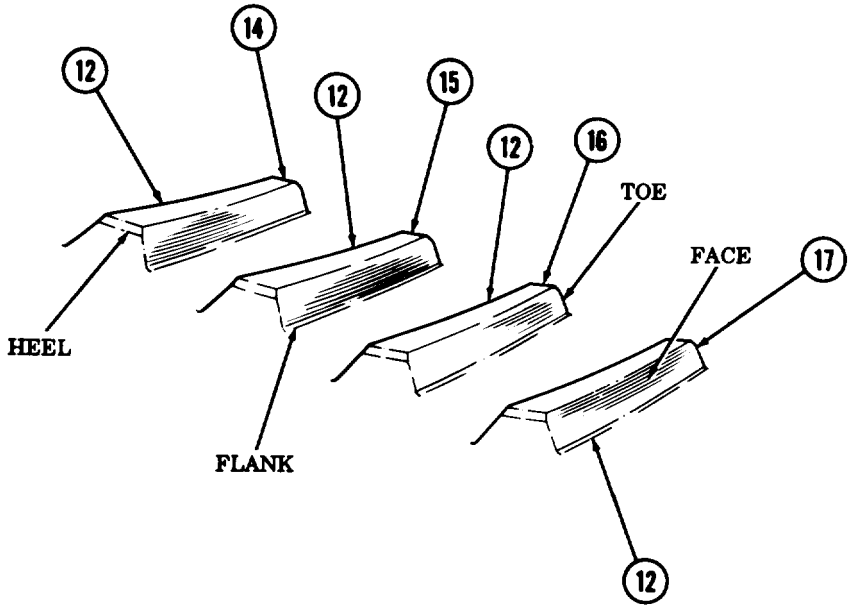

10-8. DIFFERENTIAL AND DIFFERENTIAL CARRIER REPAIR (Contd)

54. Remove six screws (6), lockwashers (7), cover (8), and shims (9) from differential carrier housing (1).
55. Remove safety wire (15), three screws (16), and retaining plate (14). Discard safety wire (15).
56. Using two jacking screws (17), remove bearing retainer (13) and shim pack (12) from shaft (11) and shaft housing shoulder (10).
57. Remove eight screws (4), washers (5), mainshaft (3), and shim pack (2) from differential carrier housing (1).

NOTE

If adjustment is needed to correct bevel ring gear and pinion gear contact pattern, make initial shim changes of at least 0.010 in. (0.25 mm).

58. For contact pattern of type in step 50, add shims to shim pack (2) and remove shims from shim pack (12).
59. For contact pattern of type in step 51, add shims to shim pack (12) and remove shims from shim pack (2).
60. For contact pattern of type in step 52, remove shims from pack (2) and add shims to shim pack (12).
61. For contact pattern of type in step 53, remove shims from shim pack (12) and add amount of shims to shim pack (2).
62. Check bevel ring gear (18) and pinion gear (19) backlash (20) using dial indicator.
63. Backlash (20) should be 0.005-0.015 in. (0.127-0.381 mm).

NOTE

- If backlash needs correction, refer to steps 54, 55, 56, and 57.
- If bevel ring gear and pinion gear backlash is within limits, go to step 70.
- If bevel ring gear and pinion gear backlash is not within limits, go to steps 64 and 65.

64. If backlash (20) is less than limits, add equal amounts of shims to shim packs (2) and (12).
65. If backlash (20) is greater than limits, remove equal amounts of shims from shim packs (2) and (12).
66. Carefully place mainshaft (3) and shim pack (2) in differential carrier housing (1) and install with eight washers (5) and screws (4). Tighten screws (4) 93-120 lb-ft (126-163 N•m).
67. Carefully aline shim pack (12) to shaft housing shoulder (10) and press on bearing retainer (13) over shaft (11).
68. Install retaining plate (14) with three screws (16). Tighten screws (16) 42-54 lb-ft (57-73 N•m). Fasten new safety wire (15) to all three screws (16).
69. Carefully aline shims (9) to bearing retainer (13) and install cover (8), shims (9), retainer (13), and shims (12) to shoulder (10) of carrier housing (1) with six new lockwashers (7) and screws (6). Tighten screws (6) 60-100 lb-ft (81-136 N•m).

10-8. DIFFERENTIAL AND DIFFERENTIAL CARRIER REPAIR (Contd)

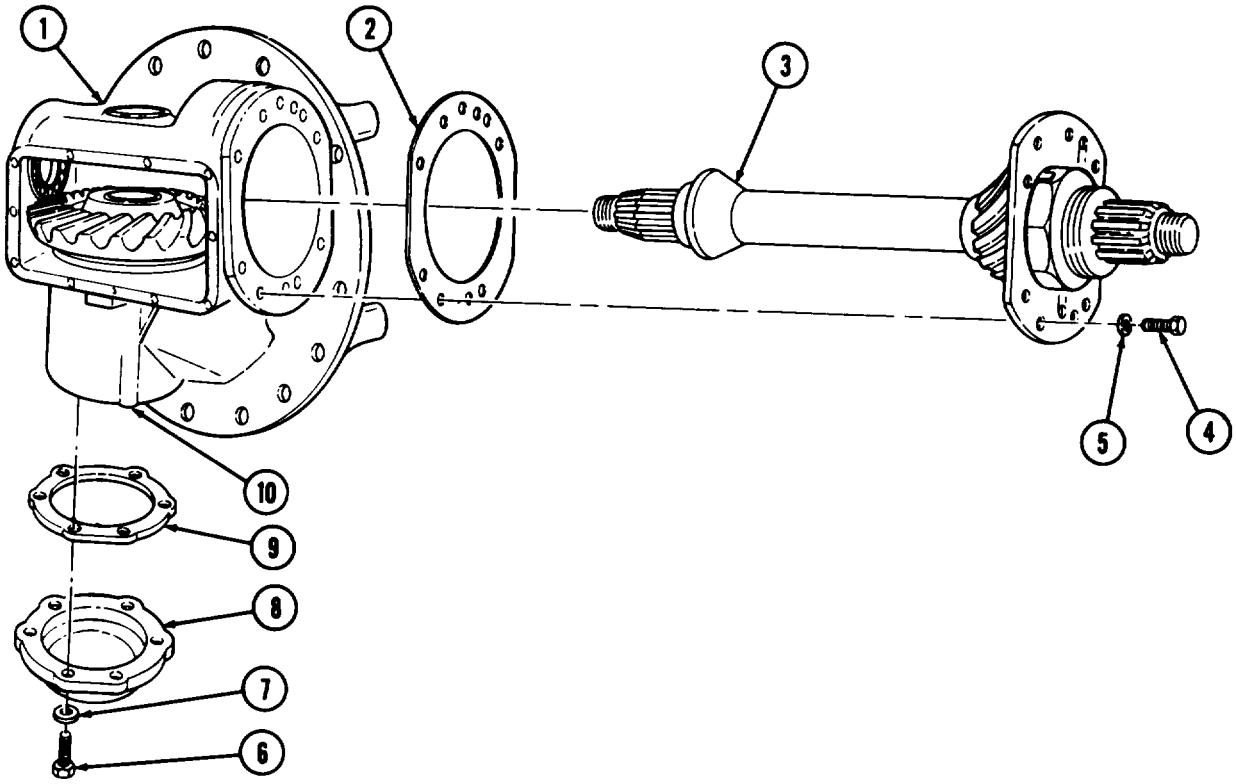

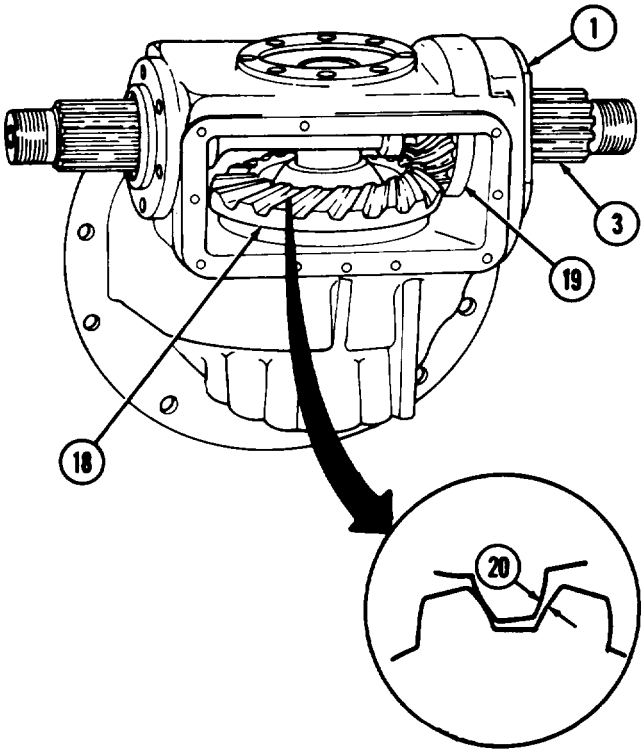

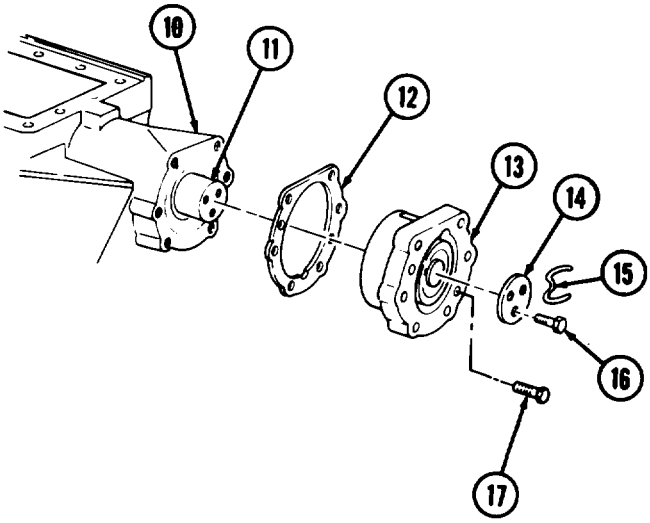

10-8. DIFFERENTIAL AND DIFFERENTIAL CARRIER REPAIR (Contd)

70. Coat both top of new gasket (4) and gasket surface (11) with light coat of sealing compound and position on differential carrier housing (5).
71. Install access cover (3) on gasket (4) and differential carrier housing (5) with ten washers (2) and screws (1). Tighten screws (1) 27-40 lb-ft (37-54 N•m).
72. Coat gasket surface (6) with light coat of sealing compound.
73. Install new gasket (7) and side cover (8) to differential carrier housing (5) with eight washers (10) and screws (9). Tighten screws (9) 27-40 lb-ft (37-54 N•m).
74. Lubricate sealing surface of new seal (13) with GM grease, coat metal contact outer diameter with sealing compound. Install new gasket (14) and seal (13) in front bearing cover (15) with seal installer tool and arbor press.

NOTE

Ensure oil slots on retainer are not blocked with sealing compound or covered by new gasket.

75. Coat both sides of new gasket (12) with light coat of sealing compound and position on retainer (18).
76. Remove eight screws (16) and washers (17) from retainer (18).
77. Install front bearing cover (15) and new seal (13), gasket (12), and retainer (18) on carrier housing (5) with eight washers (17) and screws (16). Tighten screws (16) 93-120 lb-ft (126-163 N•m).
78. Lubricate sealing surface of new seal (25) with GAA grease, coat outside metal contact outer diameter with sealing compound, and install in bearing cover (26) with seal installer tool.
79. Coat new gasket (24) with light coat of sealing compound and position on differential carrier housing (5).
80. Place thrust washer (23) over mainshaft (22) and install rear bearing cover (26) with six new lockwashers (28) and screws (27). Tighten screws (27) 24-40 lb-ft (33-54 N•m).

CAUTION

Do not tap or hammer companion flanges on driveshaft assembly. Damage to bearings will result.

81. Install two companion flanges (21) on main shaft (22) with two nuts (20). Tighten nuts (20) 300-400 lb-ft (407-542 N•m) and install with new cotter pins (19).

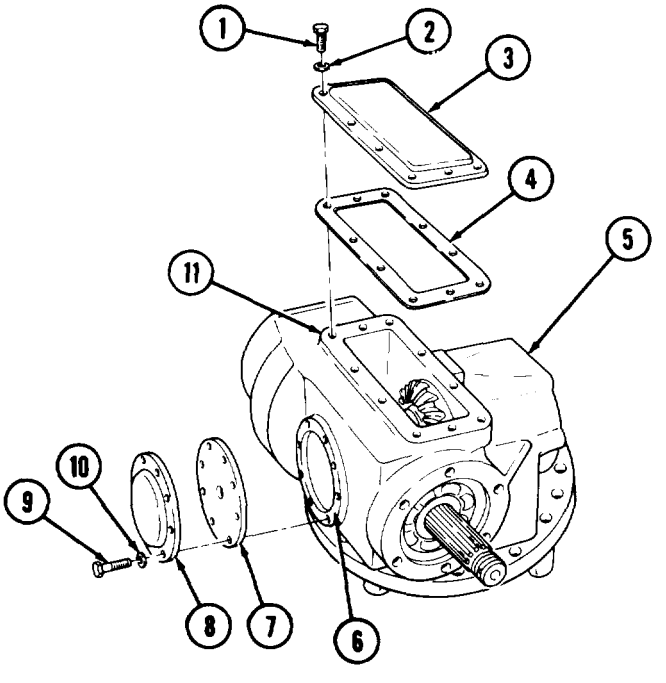

10-8. DIFFERENTIAL AND DIFFERENTIAL CARRIER REPAIR (Contd)

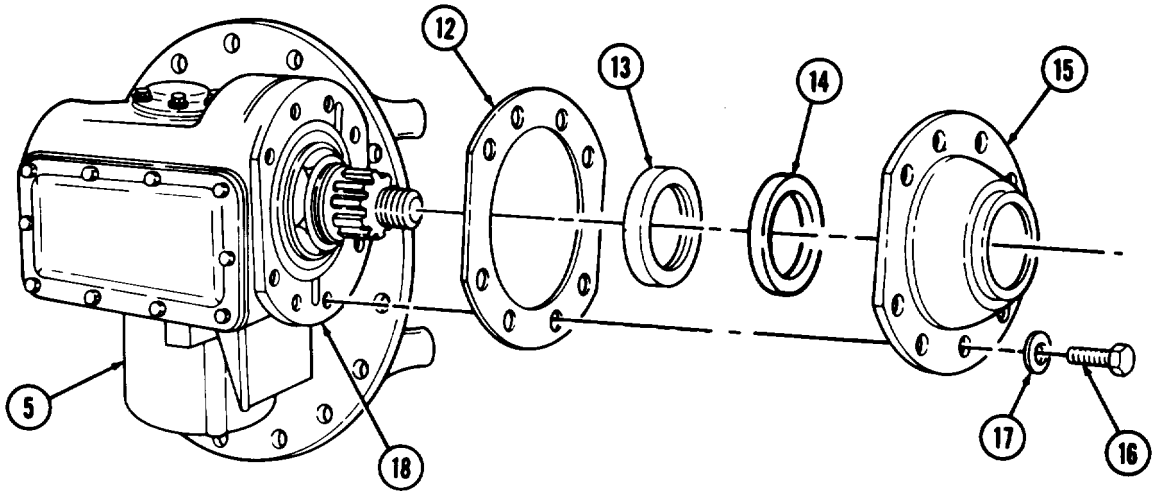

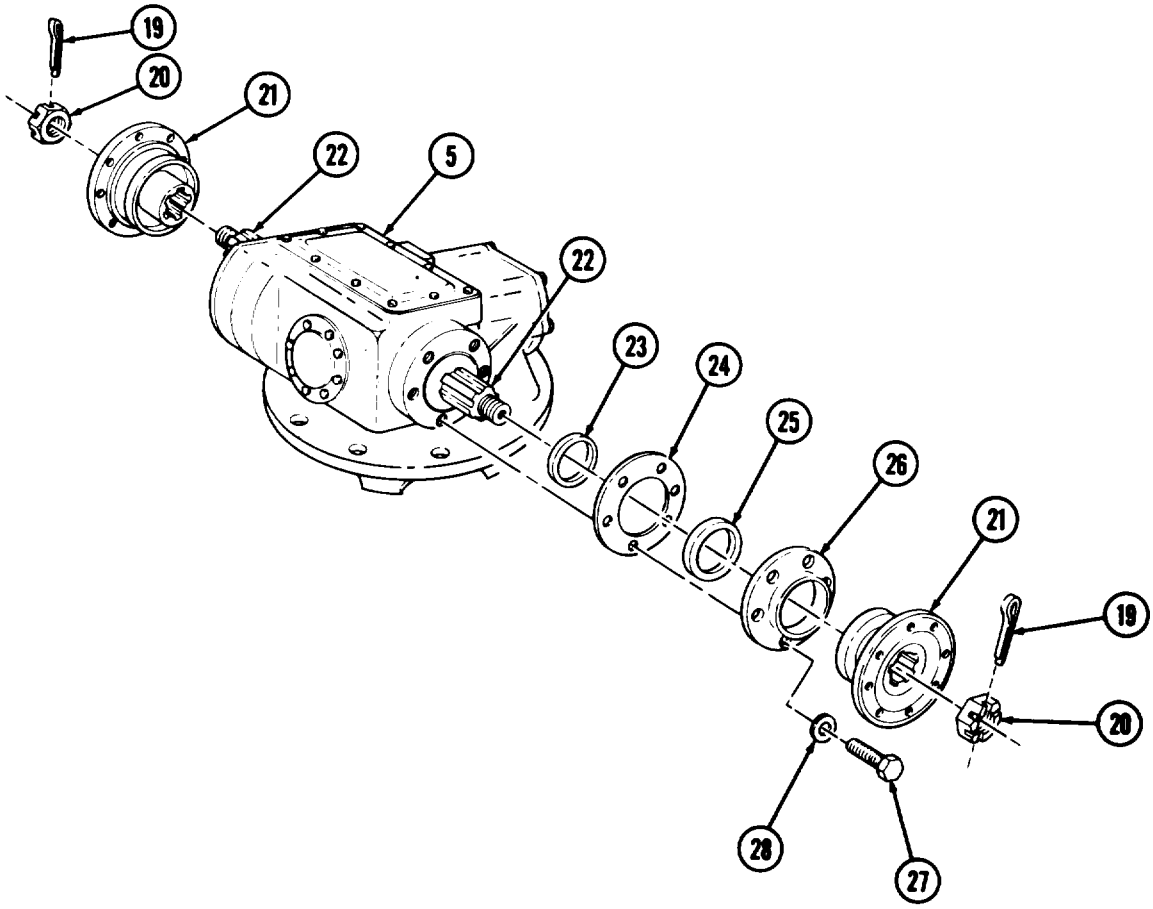

10-8. DIFFERENTIAL AND DIFFERENTIAL CARRIER REPAIR (Contd)

NOTE

Coat all bearings, races, gears, and thrust washers with clean gear oil before assembly.

82. Install two bearings (1) and (4) on hubs of differential gear housings (2) and (3).
83. by one differential gear housing (3), bearing side down, on work surface and install one thrust washer (8) and side gear (9) in differential gear housing (3).
84. Place four bevel spider gears (6) and thrust washers (7) on spider (10) and place over bevel side gear (9) in housing(3).
85. Place thrust washer (5) over hub of bevel side gear (11) and position bevel side gear (11) over spider gear assembly in differential gear housing (3).

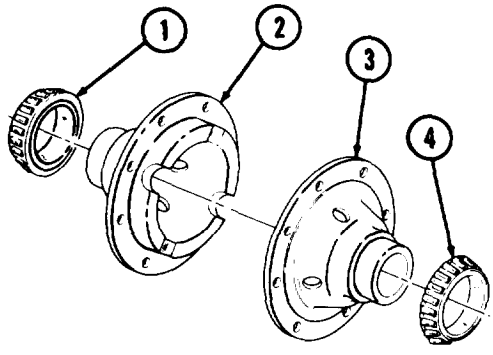

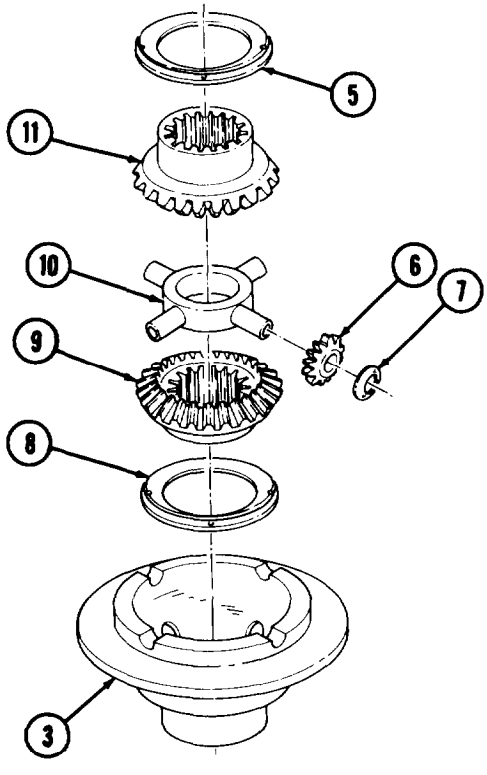

10-8. DIFFERENTIAL AND DIFFERENTIAL CARRIER REPAIR (Contd)

86. Carefully aline index marks made during disassembly and position two differential gear housings (2) and (3) on helical ring gear (14) and install with eight screws (15) and slotted nuts (13). Tighten nuts (13) 130-170 lb-ft (176-231 N•m). Secure with new safety wire (12). Twist ends of safety wire (12) together until wire is tight. Remove and discard excess safety wire (12).

87. Place two races (16) over bearings (1) and (4) on differential gear (17) and set assembly in saddles (18) of differential earner housing (20). Ensure races (16) set inside threads of saddles (18).

88. If races (16) do not fully seat in saddles (18), check that helical ring gear (14) is in mesh with helical pinion gear (19).

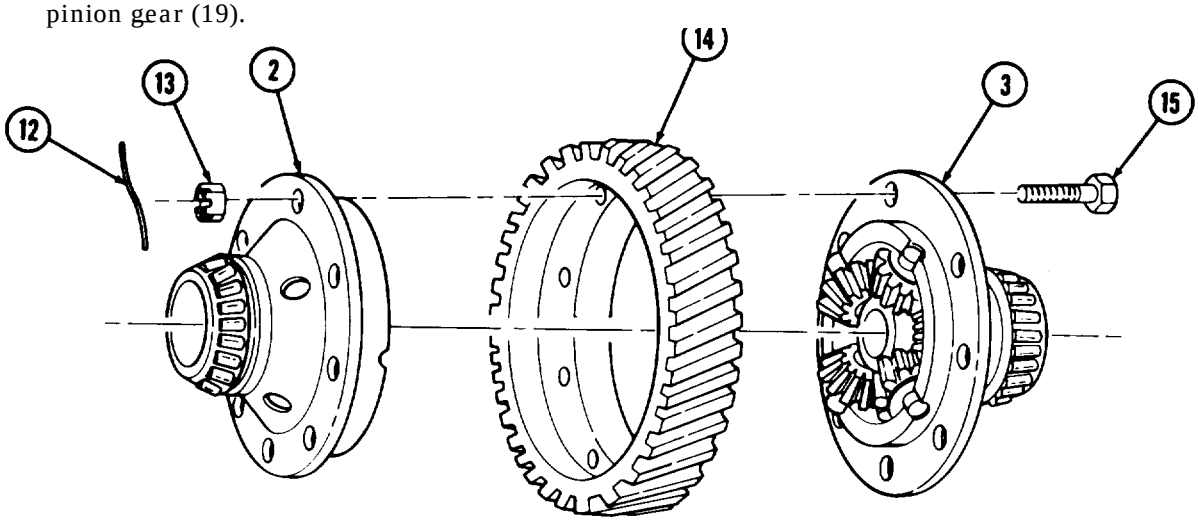

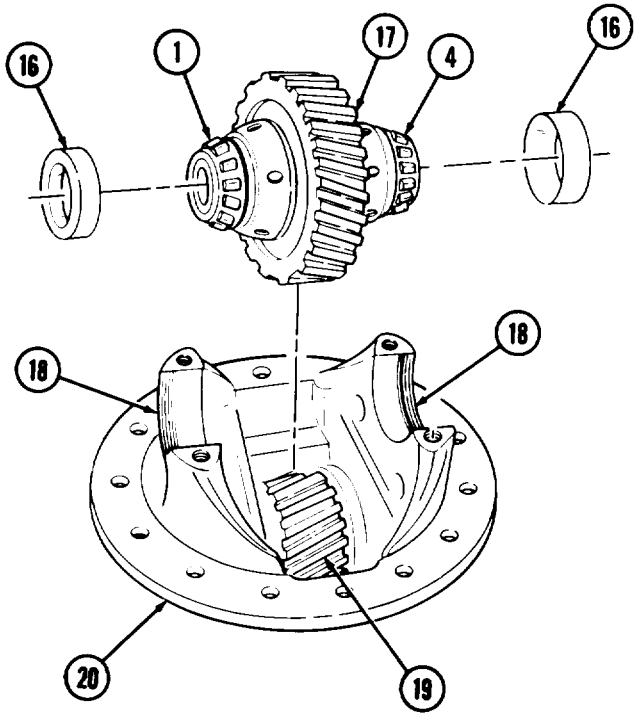

10-8. DIFFERENTIAL AND DIFFERENTIAL CARRIER REPAIR (Contd)

89. Position two caps (3) on saddles (5) and install with four washers (2) and screws (1). Finger tighten screws (1).
90. Start two adjusting nuts (6) in threads of saddles (5) and caps (3). Move caps (3) as necessary to aline threads to adjusting nuts (6).
91. Turn adjusting nuts (6) by hand until contact is made with races (4).
92. Ensure helical ring gear (7) alines with mating helical pinion gear (9). If necessary, loosen and tighten adjusting nuts (6) to aline gears.
93. Tighten screws (1) 7-12 lb-ft (9-16 N•m).

NOTE

Ensure a notch of each adjusting nut alines with top center of cap.

94. To establish helical bearing preload, perform step a. or b.
    a. Alternately tighten adjusting nuts (6) to a total 1.5 to 2.75 notch widths.
    b. Tighten each adjusting nut (6) 15-35 lb-in. (1.7-4.0 N•m).
95. Install dial indicator on differential carrier housing (8) so that indicator plunger is perpendicular to edge of helical ring gear (7).
96. Turn helical ring gear (7) one revolution in each direction. Runout reading on dial indicator must not exceed 0.008 in. (0.20 mm). If runout exceeds this value, loosen adjusting nuts (6) and screws (1) and repeat steps 90 through 95.
97. Reposition dial indicator so that plunger contacts tooth (10) and detects motion in plane of rotation of helical ring gear (7) as the gear rotates.
98. Hold helical pinion gear (9) still and rock helical ring gear (7) back and forth. Observe backlash reading on dial indicator.
99. Backlash should be 0.005-0.015 in. (0.127-0.381 mm). If reading is outside of these limits, replace helical ring gear (7) and helical pinion gear (9).
100. Tighten four screws (1) 290-370-lb-ft (393-502 N•m).
101. Install two adjusting nut (6) locks (12) to caps (3) with screws (13). Tighten screws (13) 66-85 lb-ft (90-115 Nžm).
102. Install new safety wire (11) through four screws (1) and two screws (13). Twist safety wire (11) ends together, cut off and discard excess safety wire (11), and bend twisted ends of safety wire (11) out of way.

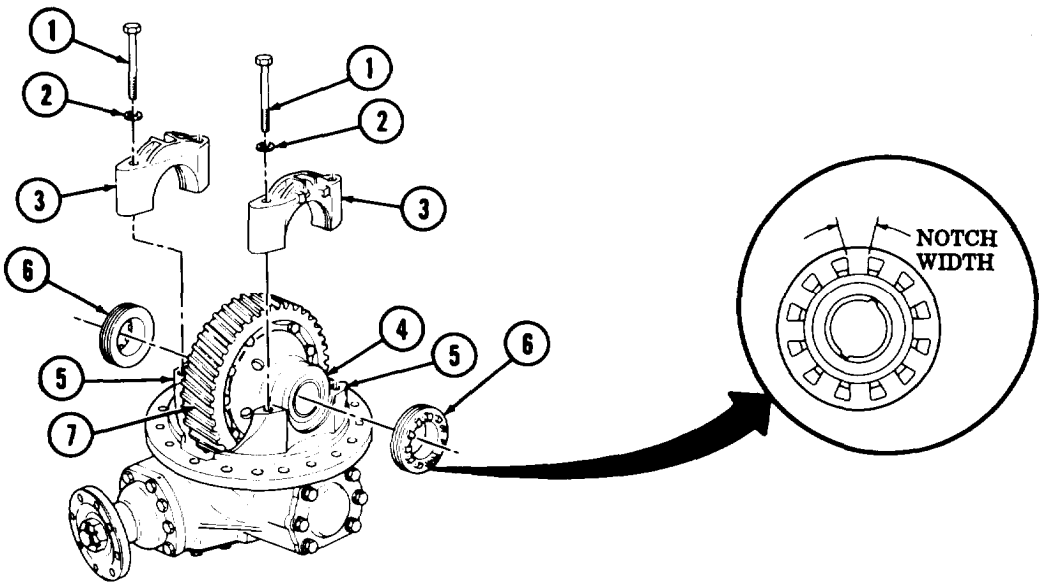

10-8. DIFFERENTIAL AND DIFFERENTIAL CARRIER REPAIR (Contd)

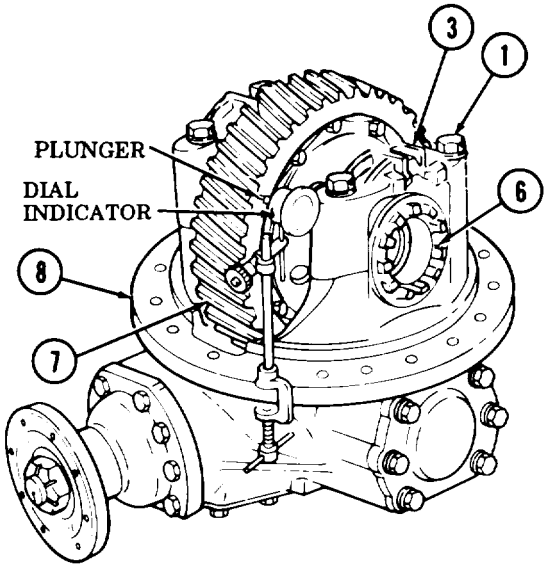

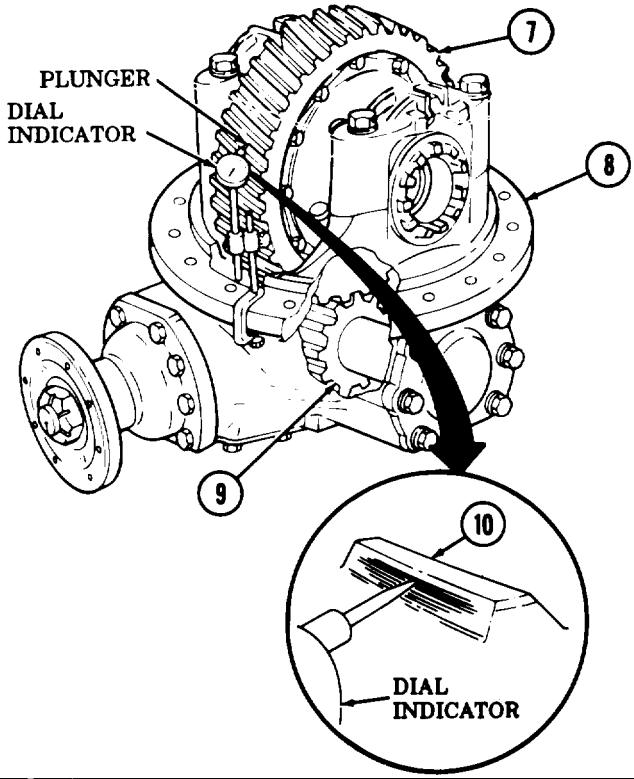

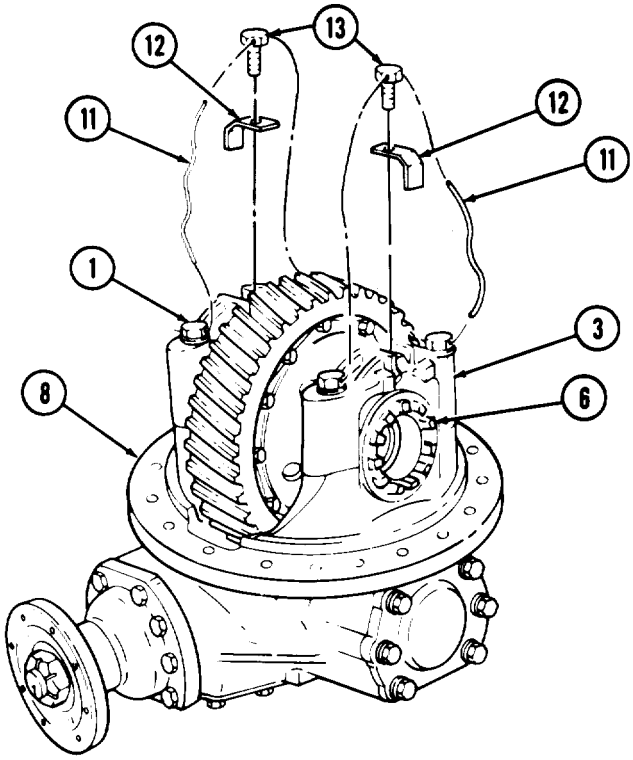

FOLLOW-ON TASK: Install differential and carrier assembly (para. 10-7).

10-9. DIFFERENTIAL OIL SEALS REPLACEMENT

THIS TASK COVERS:

a. Front Seal Removal
b. Rear Seal Removal
c. Front Seal Installation
d. Rear Seal Installation

INITIAL SETUP

APPLICABLE MODELS
All

SPECIAL TOOLS
Differential flange replacer (Appendix B, Item 60)

TOOLS
General mechanic's tool kit (Appendix B, Item 1)
Torque wrench, 3/8-in. dr. (Appendix B, Item 4)
Torque wrench, 112-in. dr. (Appendix B, Item 3)
Bearing remover/replacer (Appendix B, Item 36)

MATERIALS/PARTS
Two cotter pins (Appendix D, Item 25)
Two seals (Appendix D, Item 430)

MATERIALS/PARTS (Contd)
Gasket (Appendix D, Item 148)
Gasket (Appendix D, Item 149)
Gasket (Appendix D, Item 150)
GAA grease (Appendix C, Item 14)
Sealing compound (Appendix C, Item 42)
Sealing compound (Appendix C, Item 43)
Sealing compound (Appendix C, Item 44)

REFERENCES (TM)
TM 9-2320-260-20
TM 9-2320-260-34 P-1

EQUIPMENT CONDITION
Remove propeller shaft(s) (TM 9-2320-260-20).

a. Front Seal Removal

1. Remove cotter pin (1), nut (2), and companion flange (3) from mainshaft (5) of bearing retainer (22). Discard cotter pin (1).
2. Remove eight screws (20), washers (21), bearing cover (19), and gasket (16) from differential carrier housing (15). Discard gasket (16).
3. Remove seal (17) and gasket (18) from bearing cover (19). Discard seal (17) and gasket (18).

b. Rear Seal Removal

1. Remove cotter pin (11), nut (12), and companion flange (10) from main shaft (5). Discard cotter pin (11).
2. Remove six screws (13), washers (14), cap (9), and gasket (7) from differential carrier housing (15). Discard gasket (7). Do not remove spacer (6) from rear roller bearing (4).
3. Remove seal (8) from cap (9). Discard seal (8).

c. Front Seal Installation

1. Install new gasket (18) in bearing cover (19).
2. Coat sealing surface of new seal (17) with GAA grease and outside diameter of new seal (17) with sealing compound.
3. Using bearing replacer, install seal (17) in bearing cover (19).
4. Coat new gasket (16) with sealing compound and aline to bearing retainer (22). Ensure gasket (16) holes aline to bearing retainer (22) holes and bearing retainer (22) slots are not blocked. Coat outer surface of gasket (16) with sealing compound.

10-9. DIFFERENTIAL OIL SEALS REPLACEMENT (Contd)

5. Position bearing cover (19) on gasket (16) and install bearing cover (19), gasket (16), and retainer (22) on differential carrier housing (15) with eight washers (21) and screws (20). Tighten screws (20) 93-120 lb-ft (126-163 N•m).
6. Install companion flange (3) on mainshaft (5) with nut (2). Tighten nut (2) 300-400 lb-ft (407-542 N•m). Secure nut (2) with new cotter pin (1).

d. Rear Seal Installation

1. Coat sealing surface of new seal (8) with GAA grease and outside diameter of seal (8) with sealing compound.
2. Using bearing replacer, install seal (8) in cap (9).
3. Coat surface of new gasket (7) with sealing compound and position on cap (9). Coat outer surface of gasket (7) with sealing compound.
4. Ensure that spacer (6) is in position against rear roller bearing (4) and position cap (9) and seal (8) together with gasket (7) over mainshaft (5). Install on differential carrier housing (15) with six washers (14) and screws (13). Tighten screws (13) 24-40 lb-ft (33-54 N•m).
5. Install companion flange (10) on mainshaft (5) with nut (12). Tighten nut (12) 300-400 lb-ft (407-542 N•m). Secure nut (12) with new cotter pin (11).

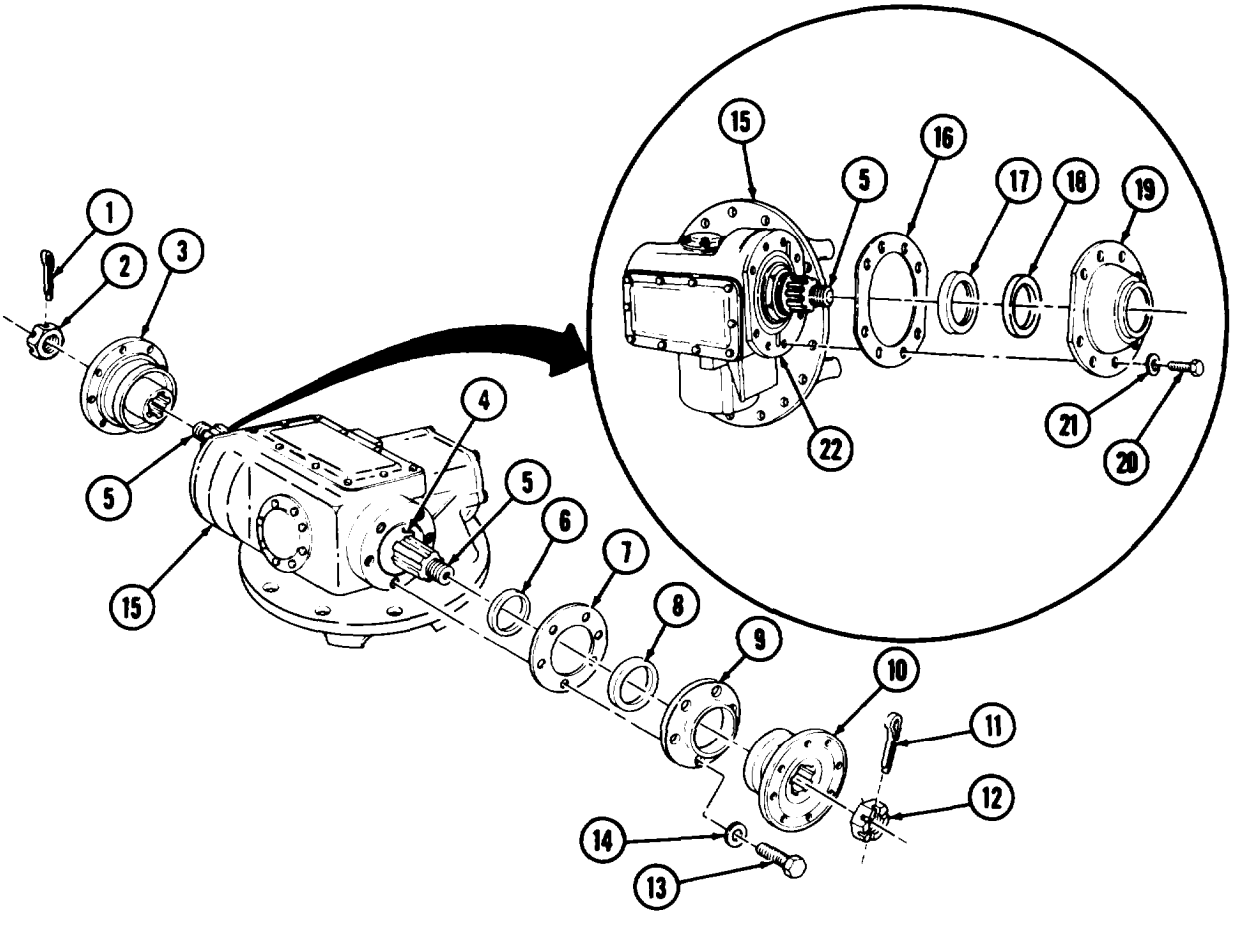

FOLLOW-ON TASK Install propeller shaft(s) (TM 9-2320-260-20).

CHAPTER 11

COMPRESSED AIR AND BRAKE SYSTEMS MAINTENANCE

Section I. Description and Data (page 11-1)
Section II. Air Compressor and Service Brake Maintenance (page 11-3)
Section III. Air-Hydraulic System Maintenance (page 11-30)

Section I. DESCRIPTION AND DATA

11-1. DESCRIPTION - AIR COMPRESSOR

a. The single cylinder air compressor is a standard component of NHC-250 diesel engines.

b. The air compressor is driven from the accessory drive gear in the engine front gearcase. A flange on the air compressor mounts to the engine accessory drive, which mounts directly to the front gearcase. The air compressor is cooled and lubricated by engine cooling and lubrication systems.

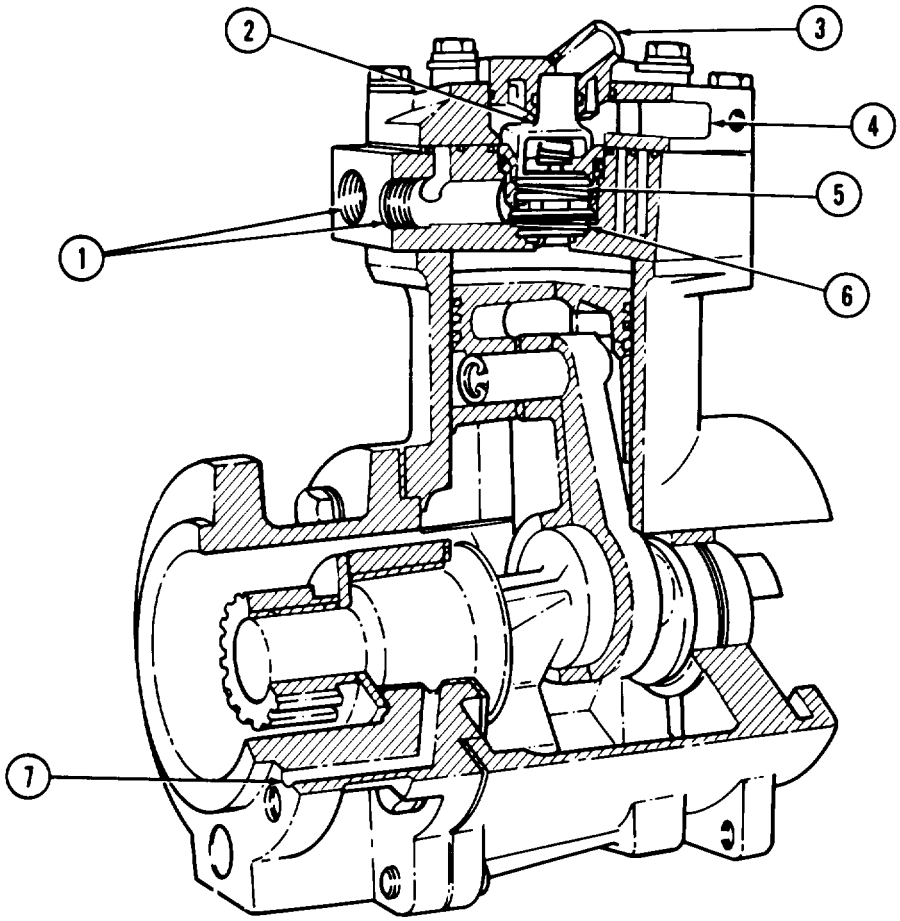

1. Coolant Inlet and Outer Ports
2. Unloader Valve
3. Air Governor Connection
4. Air Inlet
5. Intake Valve
6. Exhaust Valve
7. Lubrication Passage

11-1. DESCRIPTION - AIR COMPRESSOR (Contd)

Table 11-1. Air Compressor Tabulated Data.

Compressor capacity @1250 rpm	13.2CFM (0.00623 m^3/sec)
Cylinders	1
Piston displacement	18.05cu. in.(295.8 ml)
Bore	3.63 in. (92.2 mm)
Stroke	1.75in.(44.5mm)
Speed	Engine speed
coolant	Engine coolant
Lubrication	Engine oil
Water inlet tubing and outlet tubing outside diameter	0.50 in. (12.7mm)
Air inlet tubing, inside diameter	0.88 in.(22.4 mm)
Air outlet tubing, inside diameter	0.50.in.(12.7 mm)
Height overall (approx.)	12.25 in.(31.12 cm)
Width overall (approx.)	5.75 in.(14.6 cm)
Length overall (approx.)	9 in.(22.9 cm)
Weight overall (approx.)	40lb (18 kg)

Section II. AIR COMPRESSOR AND SERVICE BRAKE MAINTENANCE INDEX

11-2. AIR COMPRESSOR AND SERVICE BRAKE MAINTENANCE INDEX

PARA. NO.	TITLE	PAGE NO.
11-3.	Air Compressor Replacement	11-3
11-4.	Unloader Valve Replacement	11-8
11-5.	Air Compressor Repair	11-10
11-6.	Parking and Service Brakeshoe Repair	11-26
11-7.	Parking and Service Brakedrum Repair	11-28

11-3. AIR COMPRESSOR REPLACEMENT

THIS TASK COVERS:

a. Removal **b. Installation**

INITIAL SETUP

APPLICABLE MODELS
All

TOOLS
General mechanic's tool kit (Appendix B, Item 1)
Engine barring tool (Appendix B, Item 66)

MATERIALS/PARTS
Gasket (Appendix D, Item 109)
Two lockwashers (Appendix D, Item 217)
Antiseize tape (Appendix C, Item 50)

REFERENCES (TM)
TM 9-2320-260-10
TM 9-2320-260-20
TM 9-2320-260-34P-1

EQUIPMENT CONDITION
- Air reservoirs drained (TM 9-2320-260-10).
- Radiator drained (TM 9-2320-260-20).
- Air compressor coolant lines removed (TM 9-2320-260-20).
- Fuel pump removed (para. 5-13).

GENERAL SAFETY INSTRUCTIONS
Drain air reservoirs before disconnecting air lines.

11-3. AIR COMPRESSOR REPLACEMENT (Contd)

a. Removal

WARNING

Drain air reservoirs before disconnecting air lines. Small parts under pressure may shoot out with high velocity, causing injury to personnel.

NOTE

On later model engines, many lockwashers have been replaced by screw-assembled lockwashers.

1. Loosen nut (6) and remove air governor tube (7) from elbow (5).
2. Loosen nut (9) and remove air outlet tube (8) from elbow (10).
3. Loosen two hose clamps (11) and remove hose (13) from air compressor (14) and tube (12).
4. Remove four screw-assembled washers (1) and bracket (2) from cylinder block (3).
5. Remove screw (22) and washer (23) from bracket (24).
6. Remove two nuts (15), lockwashers (16), washers (17), screws (21), and washers (20) from air compressor (14) and accessory drive (18). Discard two lockwashers (16).
7. Remove two screws (26), washers (25), and bracket (24) from cylinder block (3).
8. Remove two screw-assembled washers (19), air compressor (14), and gasket (4) from accessory drive (18).
9. Remove coupling drive (27) from accessory drive (18).

11-3. AIR COMPRESSOR REPLACEMENT (Contd)

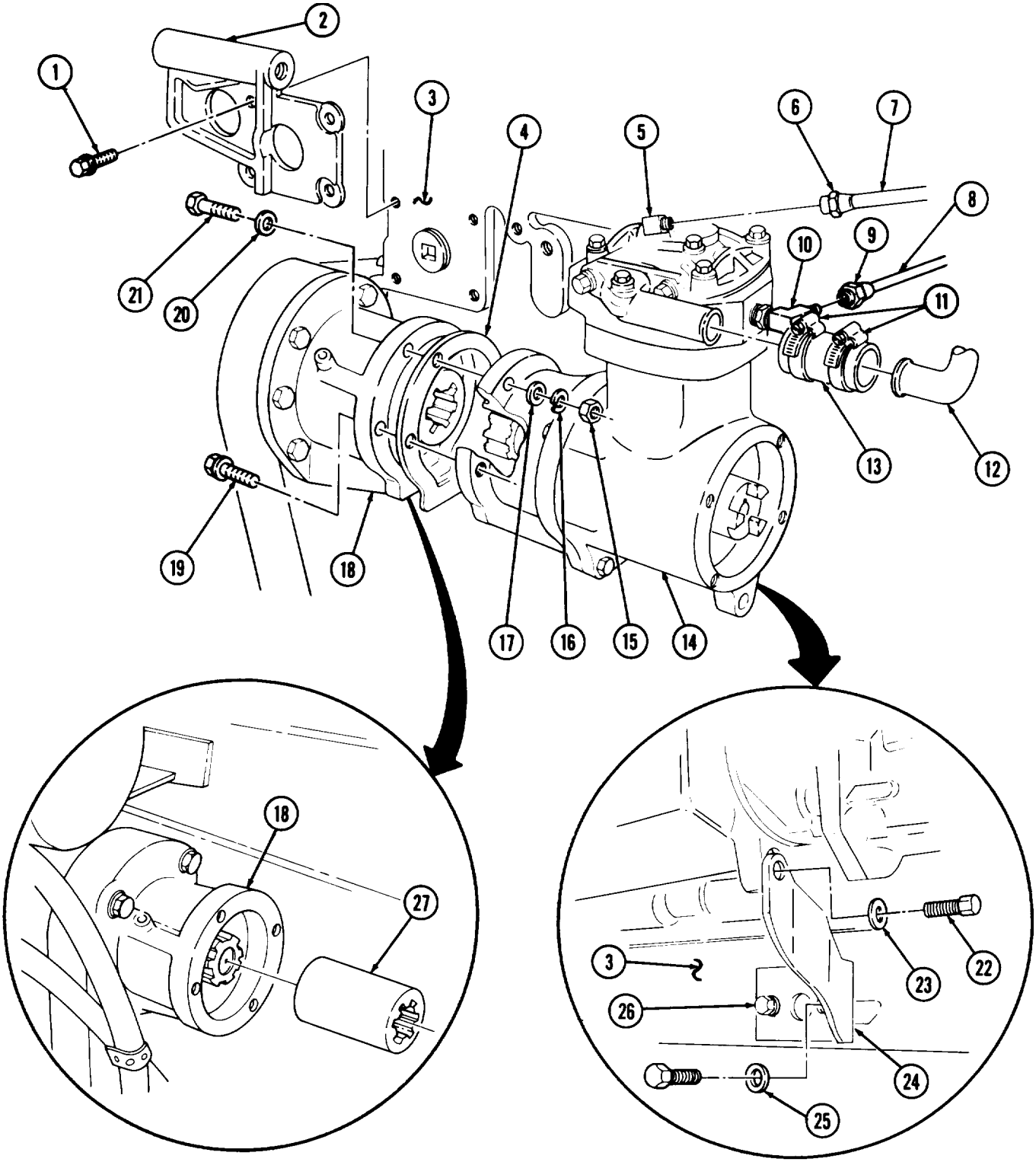

11-3. AIR COMPRESSOR REPLACEMENT (Contd)

b. Installation

1. Install coupling drive (2) on accessory drive (1).

NOTE

- Ensure oil passage holes in new gasket are open. Aline holes with oil passage prior to installation.
- Male threads must be wrapped with antiseize tape before installation.

2. Bar engine to "1-6" index mark (3). Set air compressor timing mark (3) between nine and ten o'clock, as viewed from accessory drive coupling end.
3. Install new gasket (7) and air compressor (17) on accessory drive (1) with two screw-assembled washers (21).
4. Install bracket (26) on cylinder block (6) with two washers (27), and screws (28).
5. Install washer (25) and screw (24) on bracket (26) and air compressor (17).
6. Install two washers (22), screws (23), washers (20), new lockwashers (19), and nuts (18) on air compressor (17) and accessory drive (1).
7. Install bracket (5) on cylinder black (6) with four screw-assembled washers (4).
8. Install hose (16) on air compressor (17) and tube (15) with two clamps (14).
9. Connect air outlet tube (11) on elbow (13) and tighten nut (12).
10. Connect air governor tube (10) on elbow (8) and tighten nut (9).

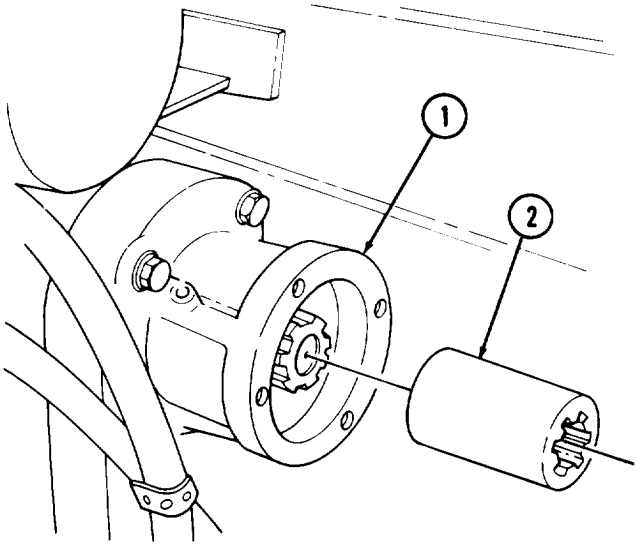

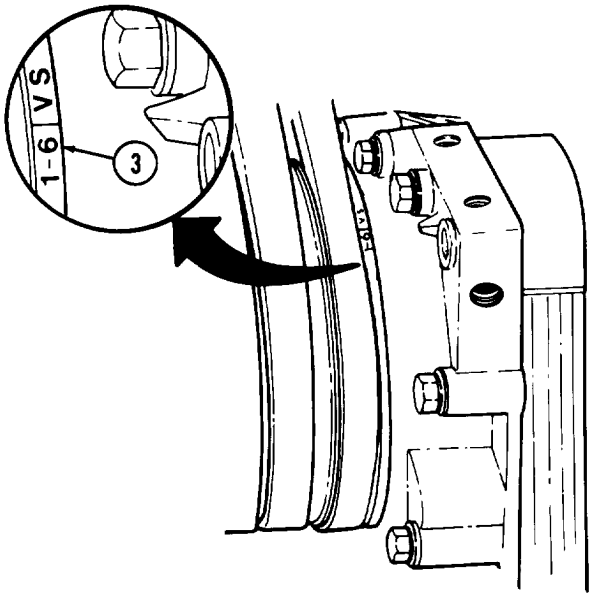

11-3. AIR COMPRESSOR REPLACEMENT (Contd)

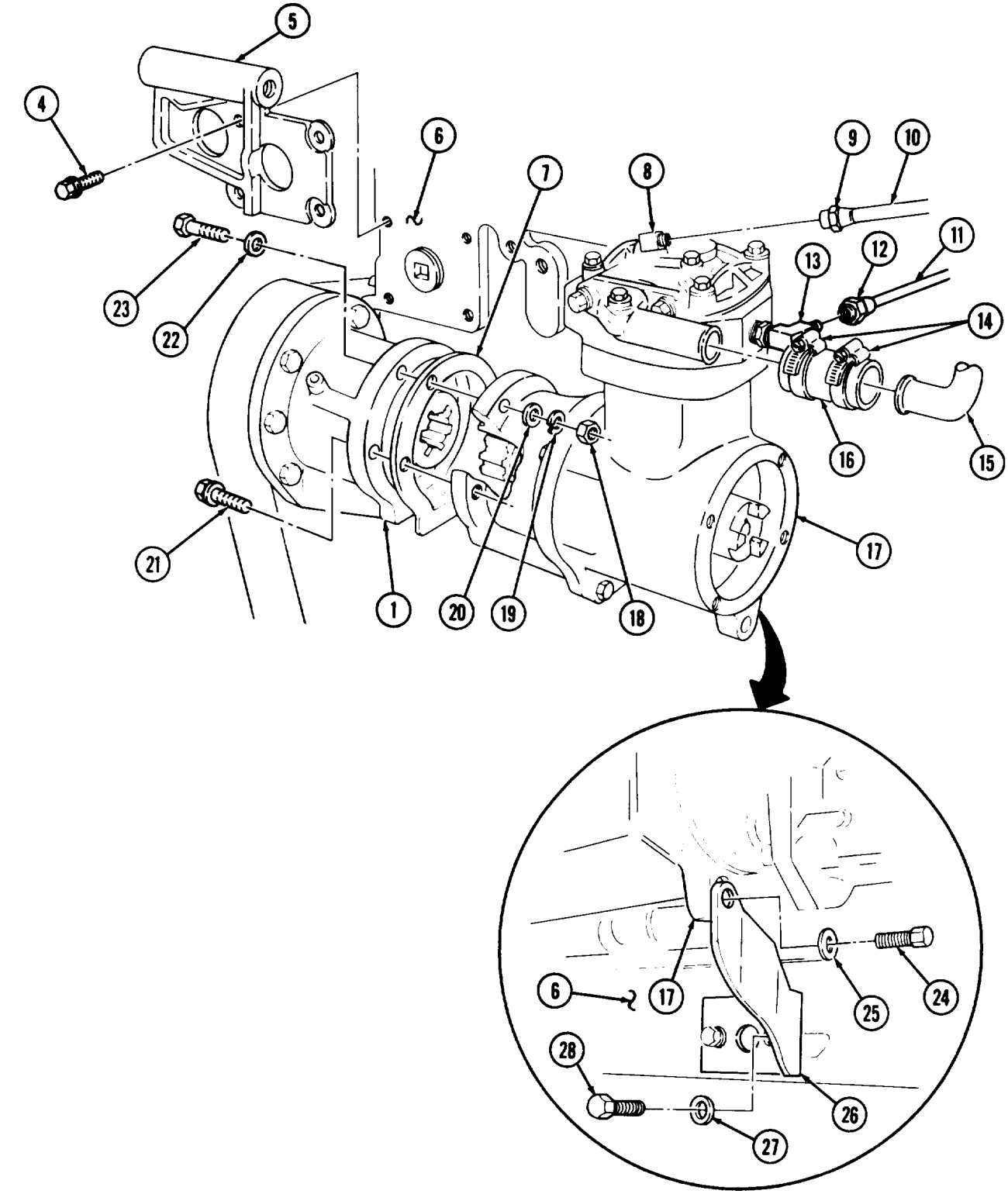

FOLLOW-ON TASKS:
- Install fuel pump (para. 5-13).
- Install air compressor coolant lines (TM 9-2320-260-20).
- Fill radiator with coolant (TM 9-2320-260-20).

11-4. UNLOADER VALVE REPLACEMENT

THIS TASK COVERS:

a. Removal **b. Installation**

INITIAL SETUP

APPLICABLE MODELS
All

TOOLS
General mechanic's tool kit
(Appendix B, Item 1)

MATERIALS/PARTS
Packing (Appendix D, Item 311)
Packing (Appendix D, Item 313)
Antiseize tape (Appendix C, Item 50)

REFERENCES (TM)
TM 9-2320-260-10
TM 9-2320-260-20
TM 9-2320-260-34 P-1

EQUIPMENT CONDITION
- Air reservoirs drained (TM 9-2320-260-10).
- Radiator drained (TM 9-2320-260-20).

GENERAL SAFETY INSTRUCTIONS
- Drain air reservoirs before disconnecting air lines.
- Hold down unloader valve assembly during removal.

a. Removal

WARNING

Drain air reservoirs before disconnecting air lines. Small parts under pressure may shoot out with high velocity, causing injury to personnel.

1. Loosen nut (3) and disconnect air governor tube (4) from elbow (2).

WARNING

Unloader valve assembly must be held down during removal. Small parts under pressure may shoot out, causing injury to personnel.

2. Remove two screws (7) and washers (6) from air compressor head cover (5) and unloader valve body (1).
3. Remove unloader valve body (1) from air compressor head cover (5).
4. Remove packings (10) and (11), unloader cap (9), and unloader spring (8) from unloader valve body (1). Discard packings (10) and (11).
5. Remove elbow (2) from unloader valve body (1).

b. Installation

1. Apply antiseize tape to threads of elbow (2) and install on unloader valve body (1).
2. Install unloader valve spring (8), unloader cap (9), and new packings (10) and (11) in unloader valve body (1).
3. Position unloader valve body (1) in air compressor head cover (5) and hold down.
4. Install unloader valve body (1) on air compressor head cover (5) with two washers (6) and screws (7).
5. Install air governor tube (4) on elbow (2) and tighten nut (3).

11-4. UNLOADER VALVE REPLACEMENT (Contd)

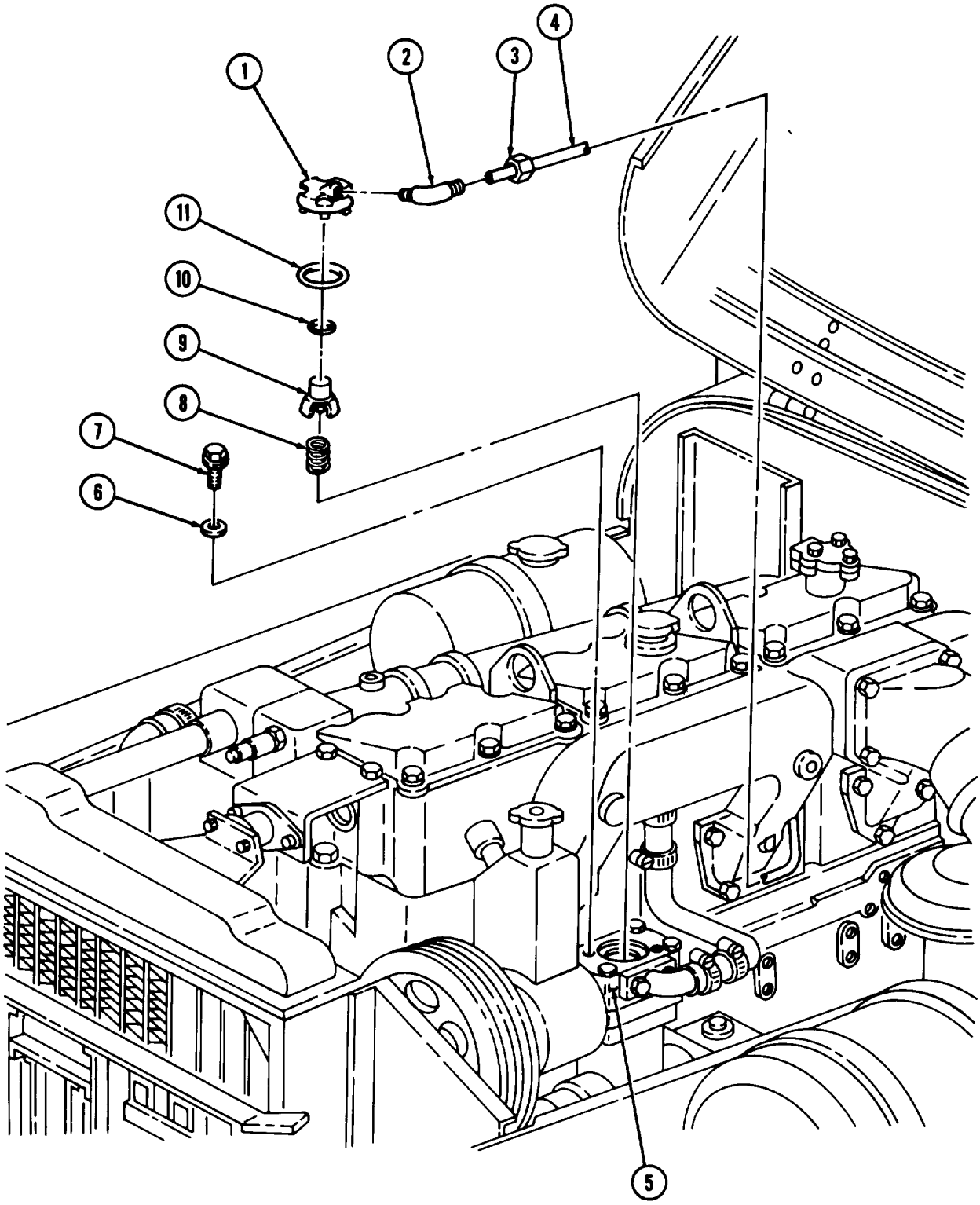

FOLLOW-ON TASKS:
- Fill radiator with coolant (TM 9-2320-260-20).
- Start engine (TM 9-2320-260-10) and check for leaks.

11-5. AIR COMPRESSOR REPAIR

THIS TASK COVERS:

a. Disassembly
b. Cleaning
c. Inspection and Repair
d. Assembly

INITIAL SETUP

APPLICABLE MODELS
All

TOOLS
Mounting plate (Appendix B, Item 12)
Depth micrometer (Appendix B, Item 16)
Outside micrometer (Appendix B, Item 8)
Inside micrometer (Appendix B, Item 9)
Telescoping gage set (Appendix B, Item 74)
Spring tester (Appendix B, Item 10)
Dial indicator (Appendix B, Item 11)
Mechanical puller (Appendix B, Item 14)
Ring compressor (Appendix B, Item 15)
Arbor press (Appendix B, Item 7)
Vise (Appendix B, Item 38)
Dial bore gage (Appendix B, Item 156)

MATERIALS/PARTS
Gasket and preformed packing set (Appendix D, Item 484)
Six lockwashers (Appendix D, Item 247)
Lubricating oil (Appendix C, Item 21)
Drycleaning solvent (Appendix C, Item 48)

REFERENCES (TM)
TM 9-2320-260-34P-1

EQUIPMENT CONDITION
Air compressor removed (para. 11-3).

GENERAL SAFETY INSTRUCTIONS
- Keep fire extinguisher nearby when using drycleaning solvent.
- Compressed air source will not exceed 30 psi (207 kPa).
- Eyeshields must be worn when cleaning with compressed air.

a. Disassembly

NOTE

On late models, many lockwashers have been replaced by screw-assembled lockwashers.

1. Install mounting plate on air compressor (7) with two screws (6).
2. Position mounting plate and air compressor (7) in vise.
3. Remove two screws (8), lockwashers (1), washers (2), air inlet connection (3), and gasket (4) from cylinder head cover (5). Discard gasket (4) and lockwashers (1).
4. Remove two screws (14), washers (13), unloader valve (9), unloader valve spring (10), intake valve (11), and intake valve spring (12) from cylinder head cover (5).
5. Remove unloader valve cap (18) and preformed packings (16) and (17) from unloader valve body (15). Discard preformed packings (16) and (17).
6. Remove intake valve seat (20) and valve disc (19) from intake valve (11).

11-5. AIR COMPRESSOR REPAIR (Contd)

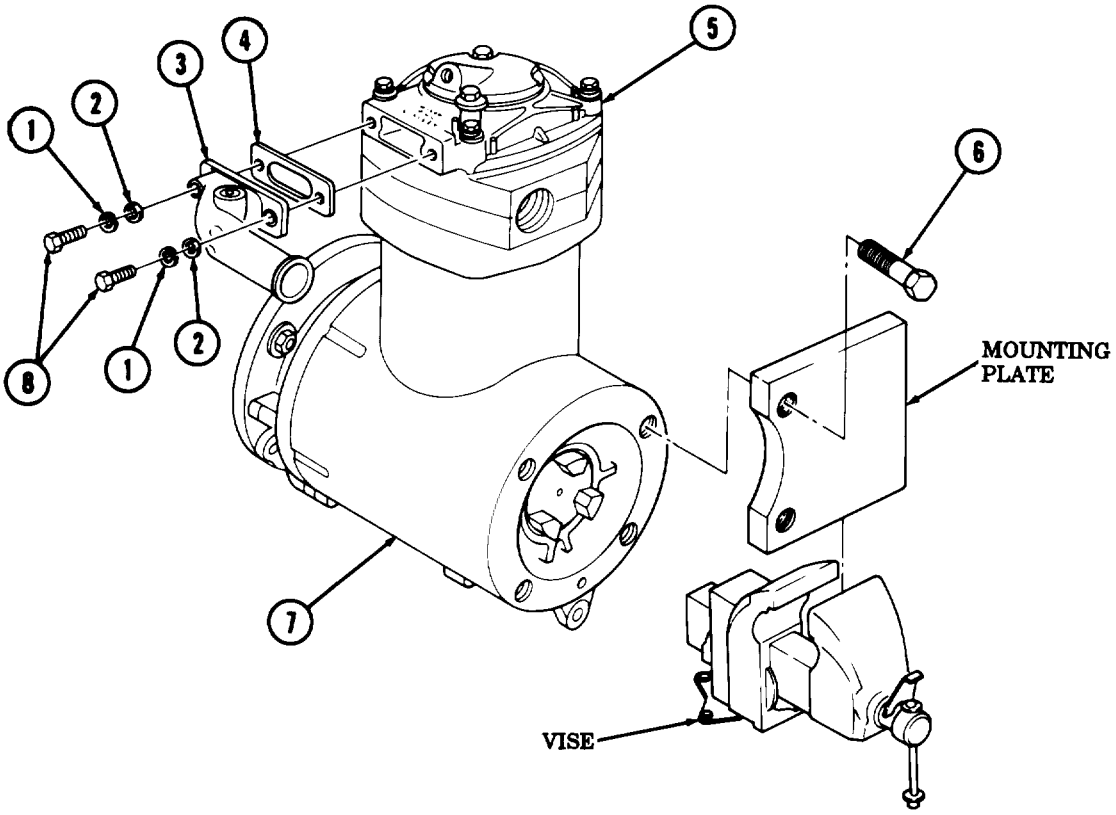

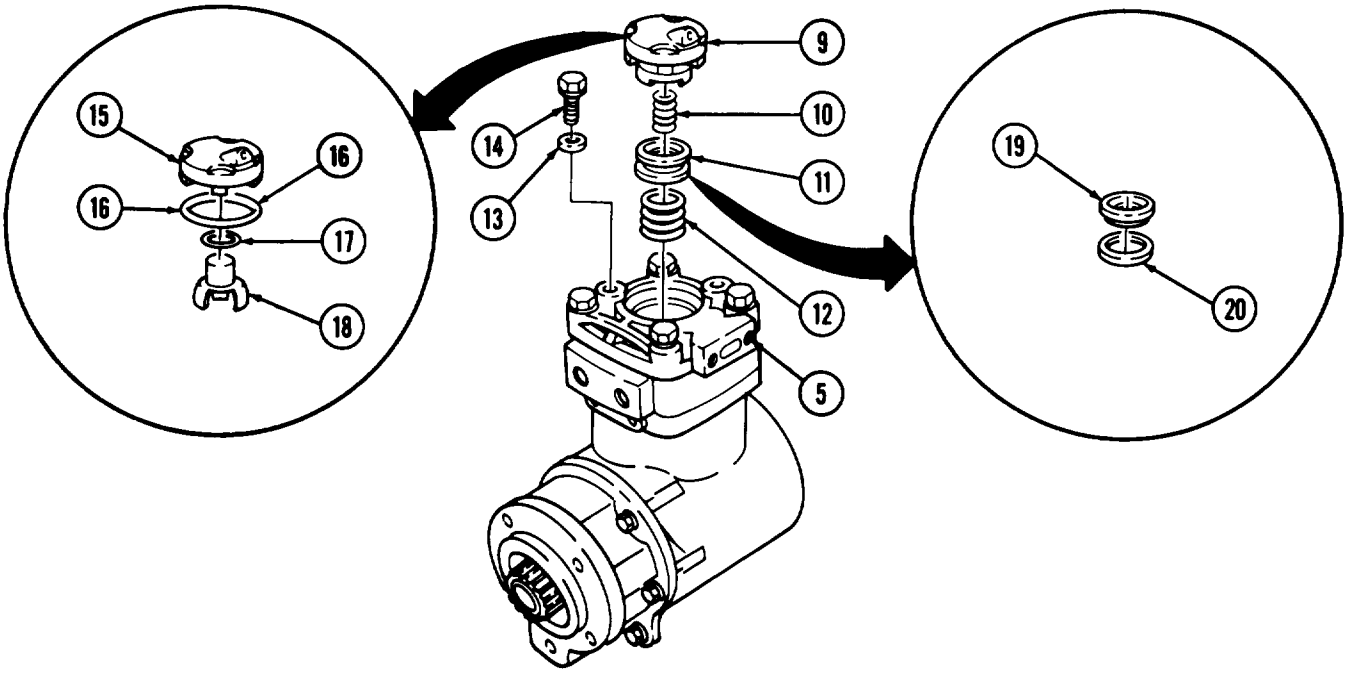

11-5. AIR COMPRESSOR REPAIR (Contd)

7. Remove four screws (1), lockwashers (2), washers (3), cylinder head cover (4), and gasket (5) from cylinder head (12) and crankcase (14). Discard lockwashers (2) and gasket (5).
8. Remove cylinder head (12) and gasket (13) from crankcase (14). Discard gasket (13).
9. Using arbor press, remove exhaust valve seat (7) from the bottom side of cylinder head (12).
10. Remove preformed packings (6) and (8), and exhaust valve (9) from exhaust valve seat (7). Discard preformed packings (6) and (8).
11. Remove exhaust valve shim (11) and exhaust valve spring (10) from cylinder head (12).
12. Remove two screw-assembled washers (15) and four screw-assembled washers (19) from crankcase (14) and front support (18).

CAUTION

Use care when removing crankshaft from connecting rod. Crankshaft must be 90° before or after top dead center (T. D. C.) of piston for ease of removal. Failure to do so may damage connecting rod and crankshaft.

13. Remove front support (18), gasket (17), and crankshaft (23) from crankcase (14). Discard gasket (17).
14. Using mechanical puller, remove drive gear (20) and thrust bearing (21) from crankshaft (23).
15. Remove key (16) and thrust bearing (22) from front support (18) and crankshaft (23).
16. Remove pipe plug (24) from crankshaft (23).
17. Remove piston (29) and connecting rod (30) from crankcase (14).

NOTE

Tag compression and oil rings for assembly.

18. Remove two compression rings (25) and oil ring (26) from piston (29).

CAUTION

If piston pin cannot be removed from piston by hand pressure, place piston in hot water to expand piston pin bore to allow removal. Driving pin from piston may cause damage to piston.

19. Remove two retaining rings (27), piston pin (28), and connecting rod (30) from piston (29).

11-5. AIR COMPRESSOR REPAIR (Contd)

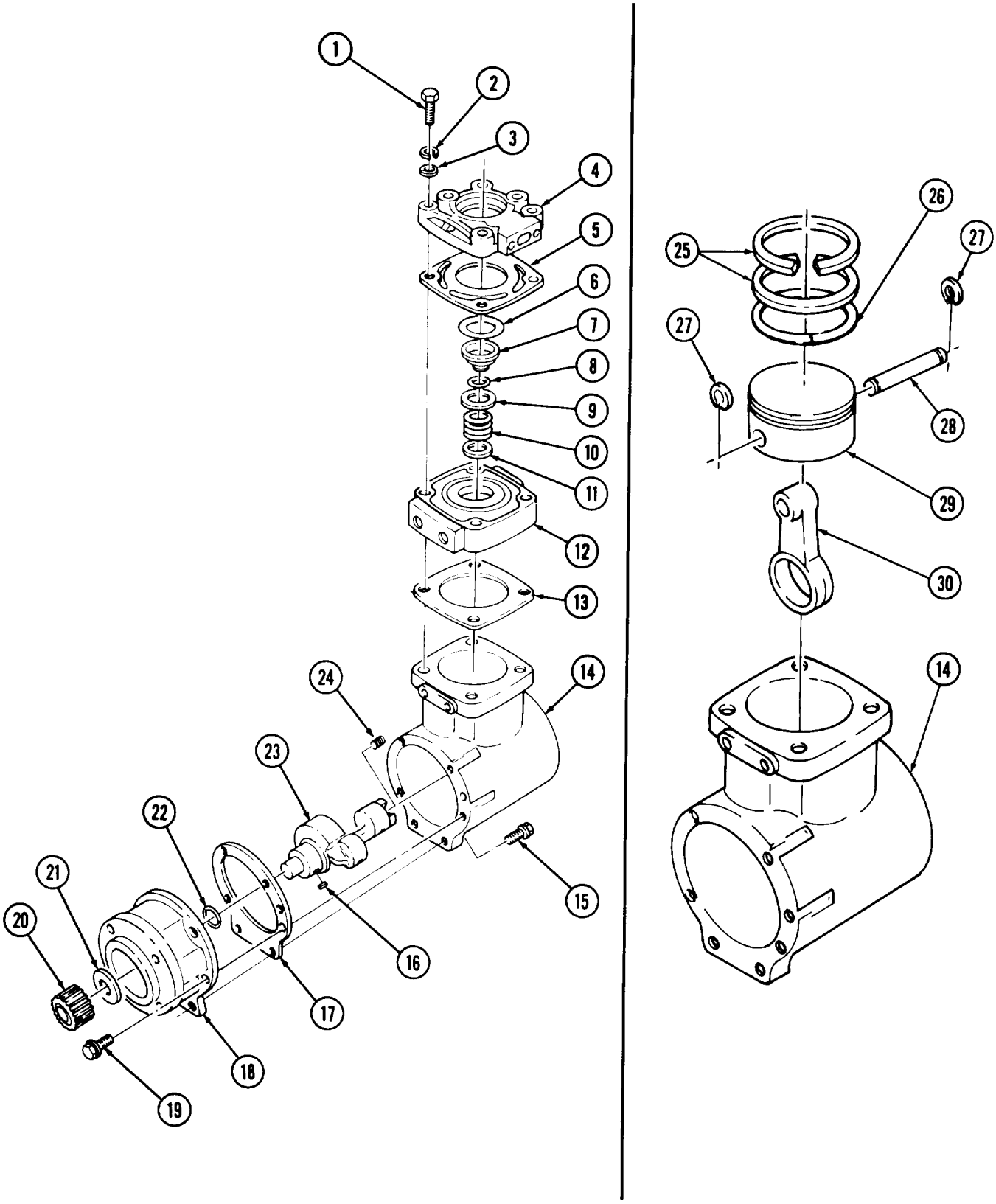

11-5. AIR COMPRESSOR REPAIR (Contd)

20. Remove crankcase (1) and mounting plate from vise.
21. Remove two screws (2) and mounting Plate from crankcase (1).

b. Cleaning

WARNING

- Drycleaning solvent is flammable and will not be used near open flame. Use only in well-ventilated places. Failure to do so may result in injury to personnel.
- Compressed air source will not exceed 30 psi (207 kPa). When cleaning with compressed air, eyeshields must be worn. Failure to wear eyeshields may result in injury to personnel.

1. Immerse all metal parts in drycleaning solvent. Remove all carbon deposits, rust, and scale. Use compressed air to dry parts.
2. Ensure that interior drilled oil passages (4) in crankshaft (3) are thoroughly cleaned.

CAUTION

Do not use screwdriver or scraper to remove carbon and scale. This may cause damage to sealing surfaces.

3. Clean all gasket remains from mating surfaces using drycleaning solvent.

11-5. AIR COMPRESSOR REPAIR (Contd)

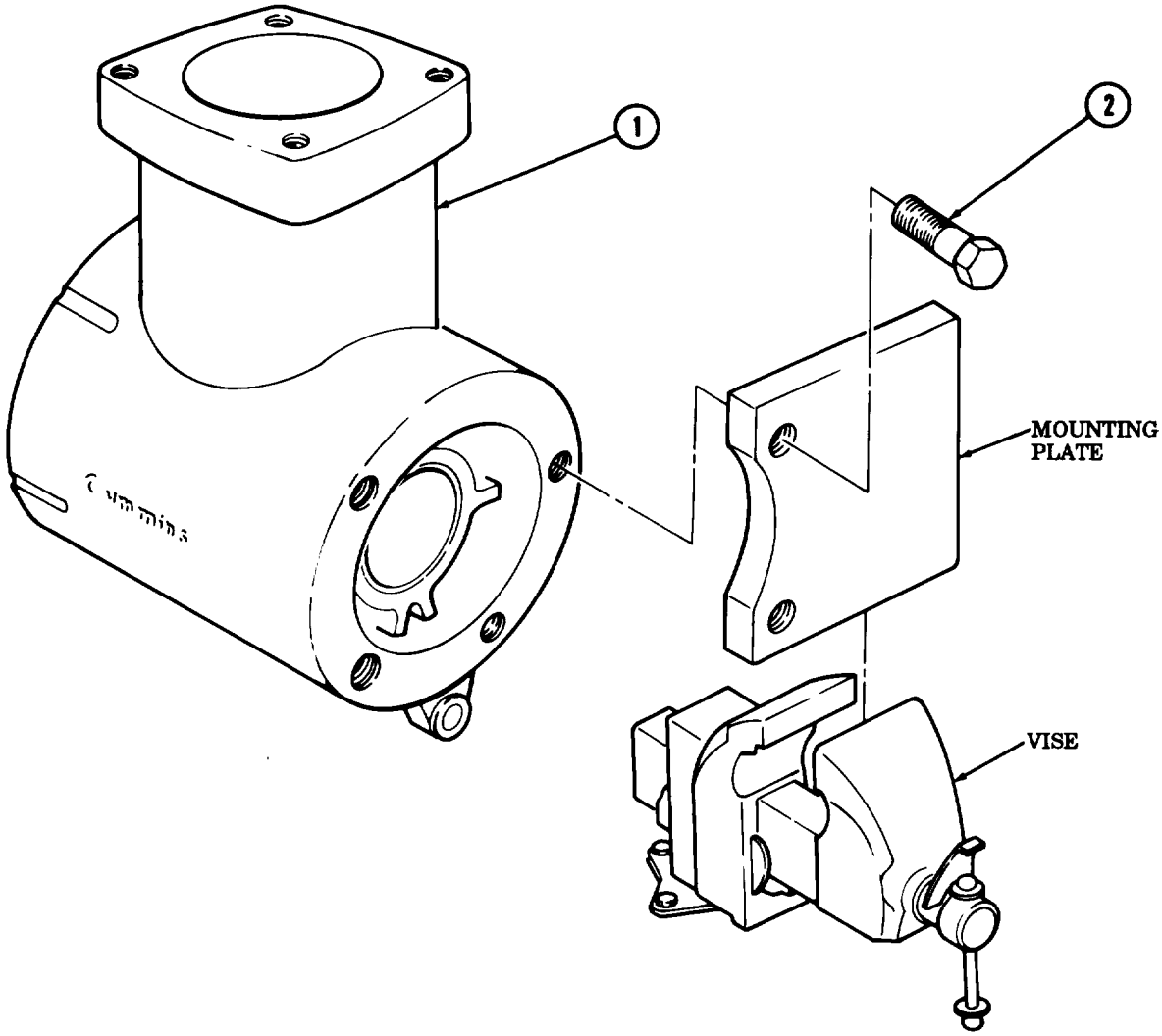

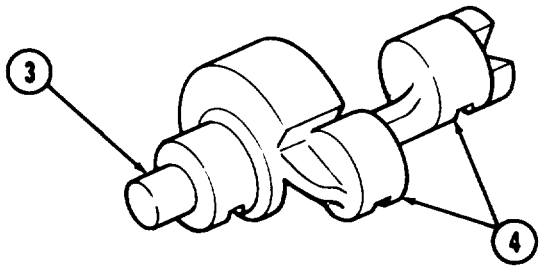

11-5. AIR COMPRESSOR REPAIR (Contd)

c. Inspection and Repair

1. Inspect narrow part of unloader cap (1) for scoring and excessive wear. Inspect unloader cap (1) seating surface for distortion, pitting, and excessive wear. Replace unloaded cap (1) if scored, distorted, pitted, or excessively worn.
2. Inspect unloader valve spring (2) for wear. Measure unloader valve spring (2). Refer to table 11-3, Air Compressor Spring Wear Limits, for measurements. Replace unloader valve spring (2) if worn past limits.
3. Inspect intake valve spring (3) for wear. Measure intake valve spring (3). Refer to table 11-3, Air Compressor Spring Wear Limits, for measurements. Replace intake valve spring (3) if worn past limits.
4. Inspect cylinder head cover (4) and cylinder head (6) for cracks, breaks, and bends. Replace cylinder head cover (4) and/or cylinder head (6) if cracked, broken, or bent.
5. Inspect exhaust valve seat (5) for bends, cracks, breaks, and wear. Measure exhaust valve seat (5) height. Refer to table 11-2, Air Compressor Wear Limits, for measurements. Replace exhaust valve seat (5) if bent, cracked, broken, or worn past limits.
6. Inspect exhaust valve spring (7) for wear. Measure exhaust valve spring (7). Refer to table 11-3, Air Compressor Spring Wear Limits, for measurements. Replace exhaust valve spring (7) if worn past limits.
7. Inspect intake valve seat (8) for bends, cracks, breaks, and wear. Measure intake valve seat (8) height and surface. Refer to table 11-2, Air Compressor Wear Limits, for measurements. Replace intake valve seat (8) if bent, cracked, broken, or worn past limits.
8. Inspect crankshaft (12) for scratches, scoring, and excessive wear. Replace crankshaft (12) if scratched, scored, or excessively worn.
9. Inspect crankshaft journals (9), (10), and (11) for wear. Measure crankshaft journals (9), (10), and (11). Refer to table 11-2, Air Compressor Wear Limits, for measurements. Replace crankshaft (12) if any journal (9), (10), or (11) is worn past limits.

Table 11-2. Air Compressor Wear Limits.

ITEM NO.	ITEM/POINT Of MEASUREMENT	WEAR LIMITS/TOLERANCES	
		INCHES	MILLIMETERS
5	Exhaust valve seat height - minimum	0.485	12.32
8	Intake valve seat		
	Height - minimum	0.270	6.86
	Surface	0.001	0.03
9	Crankshaft journal - minimum	1.871	47.52
10	Crankshaft journal – minimum	1.871	47.52
11	Crankshaft journal - minimum	1.933	49.10

Table 11-3. Air Compressor Spring Wear Limits.

ITEM NO.	ITEM/POINT Of MEASUREMENT	WEAR LIMITS/TOLERANCES	
		INCHES	MILLIMETERS
2	Unloader valve spring - minimum	12.00	304.8
3	Intake valve spring-minimum	0.55	14.0
6	Exhaust valve spring - minimum	8.00	203.2

11-5. AIR COMPRESSOR REPAIR (Contd)

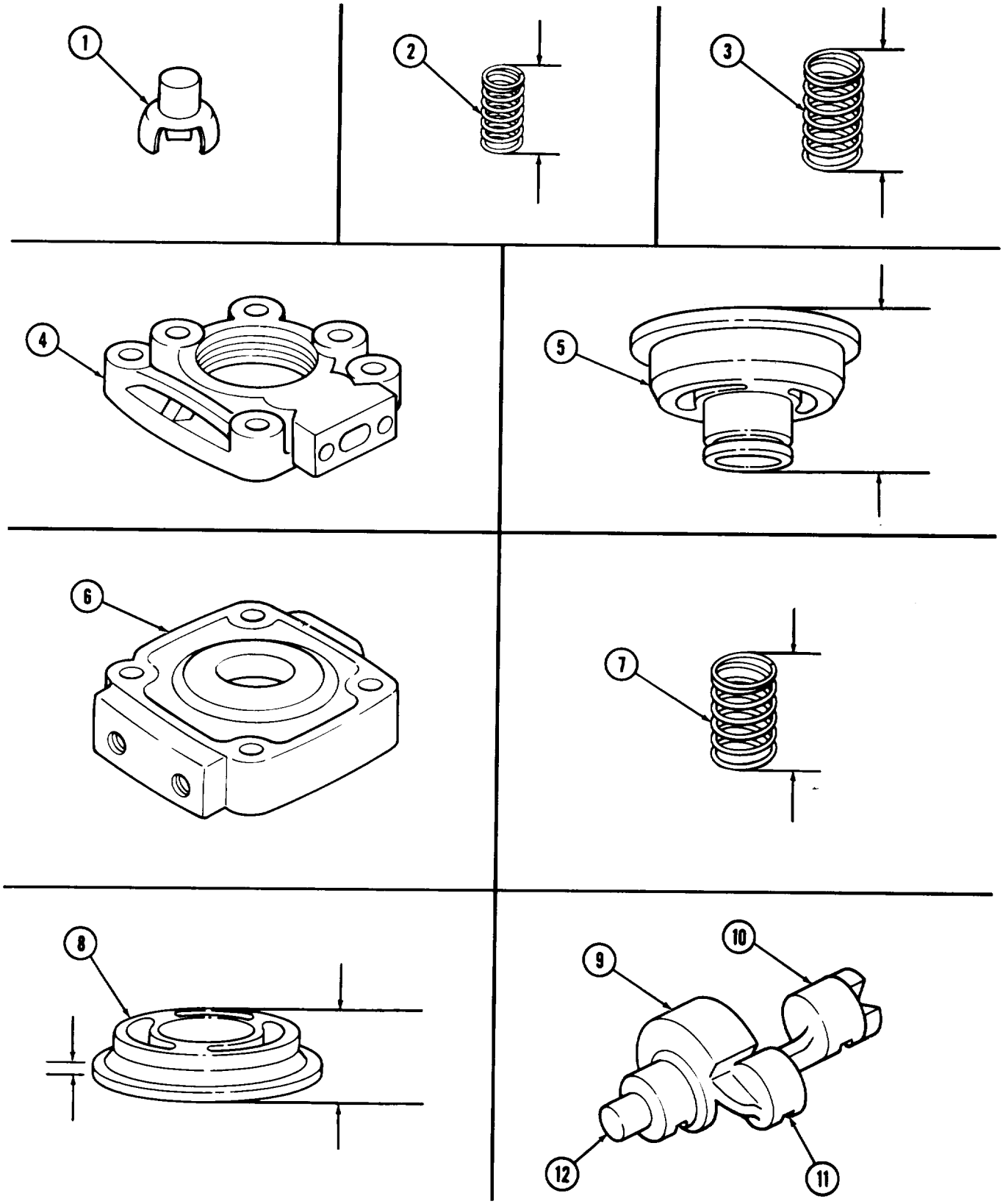

11-5. AIR COMPRESSOR REPAIR (Contd)

10. Inspect front support (1) for scratches, scoring, and breaks. Measure outside diameter of thrust Support flange(2) in front support(1) for wear. Refer to table 11-4, Air Compressor Wear Limits, for measurements. Replace front support (1) if scratched, scored, broken, or if thrust support flange (2) is worn past limits.
11. Measure inside diameter of crankshaft bore (3). Refer to table 11-4, Air Compressor Wear Limits, for measurements. Replace front support (1) if crankshaft bore (3) is worn past limits.
12. Measure thrust bearing (4) for wear. Refer to table 11-4, Air Compressor Wear Limits, for measurements. Replace thrust bearing (4) if worn past limits.
13. Inspect support bearing (5) for scoring, wear, or other damage. Replace support bearing (5) if scored, damaged, or worn past limits. Refer to table 11-4, Air Compressor Wear Limits, for measurements. Replace support bearing (5) if damaged.
14. Inspect drive gear (6) for wear, scoring, or damage. Replace drive gear (6) if worn, scored, or damaged.
15. Inspect connecting rod bushing (7) for scoring or damage. Replace connecting rod bushing (7) if scored or damaged.
16. Inspect connecting rod (9) for cracks, breaks, bends, and wear. Measure piston pin (8) and crankshaft (10) bores for wear. Refer to table 11-4, Air Compressor Wear Limits, for measurements. Replace connecting rod (9) if damaged or worn.
17, Inspect piston (11) for scoring, cracks, or damage. Measure piston (11) for wear. Refer to table 11-4, Air Compressor Wear Limits, for measurements. Replace piston (11) if scorn, cracked, damaged, or worn past limits.
18. Measure piston pin (12) for wear. Refer to table 11-4, Air Compressor Wear Limits, for measurements. Replace piston pin (12) if worn past limits.

Table 11-4. Air Compressor Wear Limits.

ITEM NO.	ITEM/POINT OF MEASUREMENT	WEAR LIMITS/TOLERANCES	
		INCHES	MILLIMETERS
1	Front support		
2	Thrust support flange - outside diameter – minimum	1.287	32.69
3	Crankshaft bore - inside diameter - maximum	1.877	47.68
4	Thrust bearing thickness, - minimum	0.290	7.366
9	Connecting rod		
8	Piston pin bore – inside diameter - maximum	0.689	17.50
10	Crankshaft bore w/o bushing (7) - inside diameter – maximum	1.935	49.15
11	Piston		
	Skirt diameter - minimum	3.617	91.87
	Piston pin bore - maximum	0.689	17.50
12	Piston pin – outside diameter – minimum	0.687	17.45

11-5. AIR COMPRESSOR REPAIR (Contd)

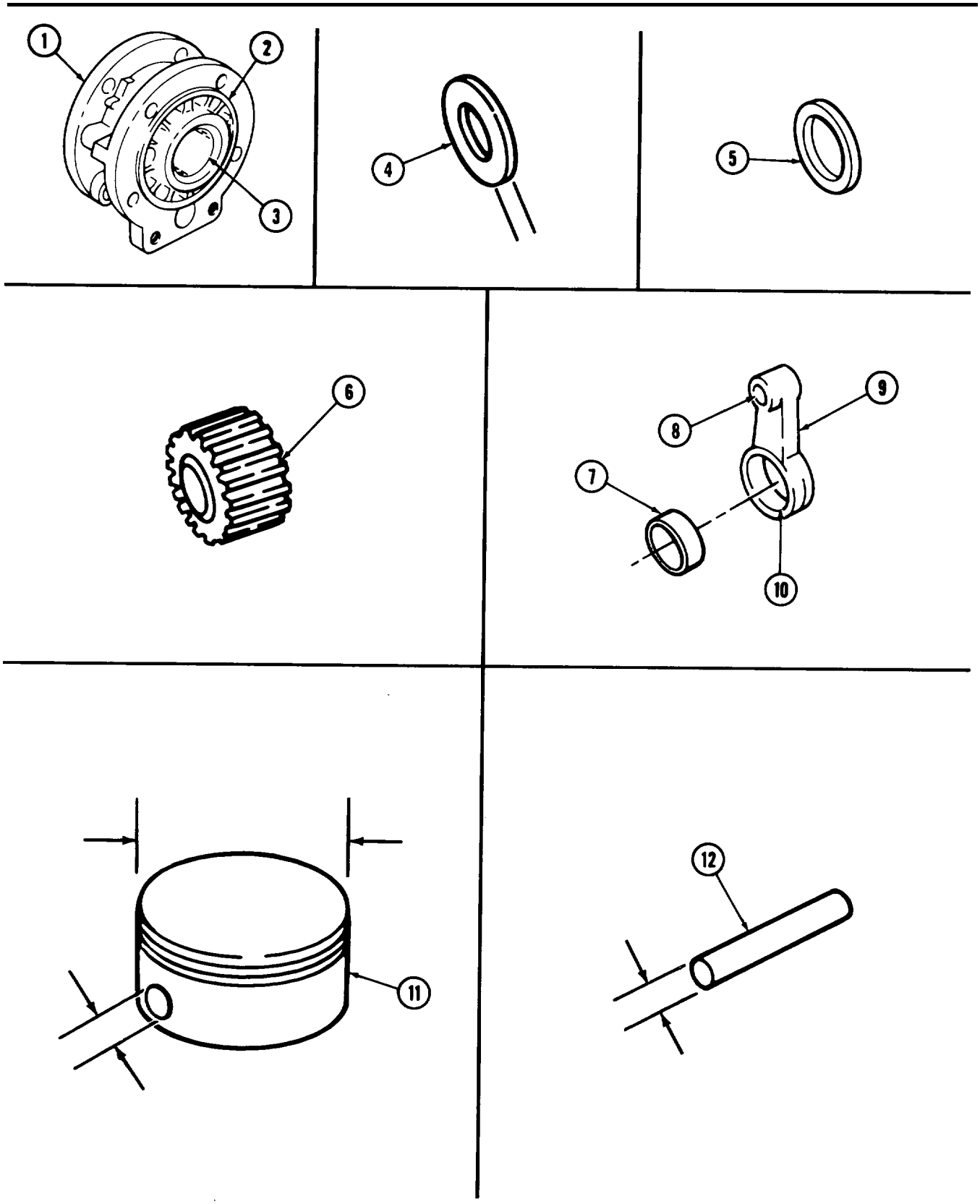

11-5. AIR COMPRESSOR REPAIR (Contd)

19. Install new compression ring (2) in compression ring groove (3). Insert 0.009 in, (0.23 mm) feeler gage between compression ring (2) and groove (1). Replace if compression ring(2) can be pressed below piston surface with feeler gage in place.
20. Seat new compression ring (5) in unworn crankcase (6) portion of cylinder bore (4). Insert feeler gage in ring end gap. Gap should be between 0.010-0.020 in. (0.25-0.51 mm), Use different sized rings if necessary.

NOTE

The maximum crankcase bore is 3.6285 in. (92.16 mm). The maximum out-of-round specification is 0.0014 in. (0.036 mm).

21. Inspect cylinder bore (4) for scoring, Burnish bore (4), as required, to remove scoring,
22. Using dial bore gage, measure cylinder bore (4) for out-of-roundness. If out-of-round measurement is not within specifications, hone bore to receive 0.010, 0.020, or 0.030 in. (0.25, 0.51, or 0.76 mm) oversize piston and rings.
23. Measure inside diameter of crankcase bushing (7). Replace crankcase bushing (7) if measurement exceeds 1.878 in. (47.7 mm).

11-5. AIR COMPRESSOR REPAIR (Contd)

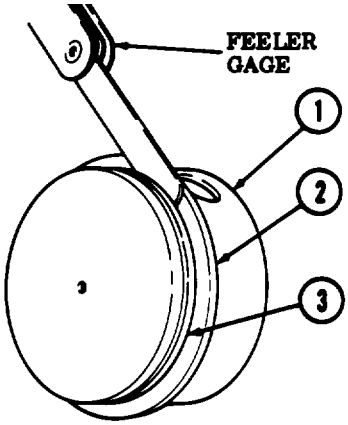

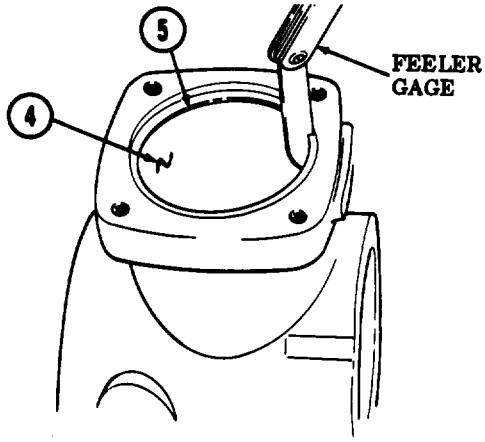

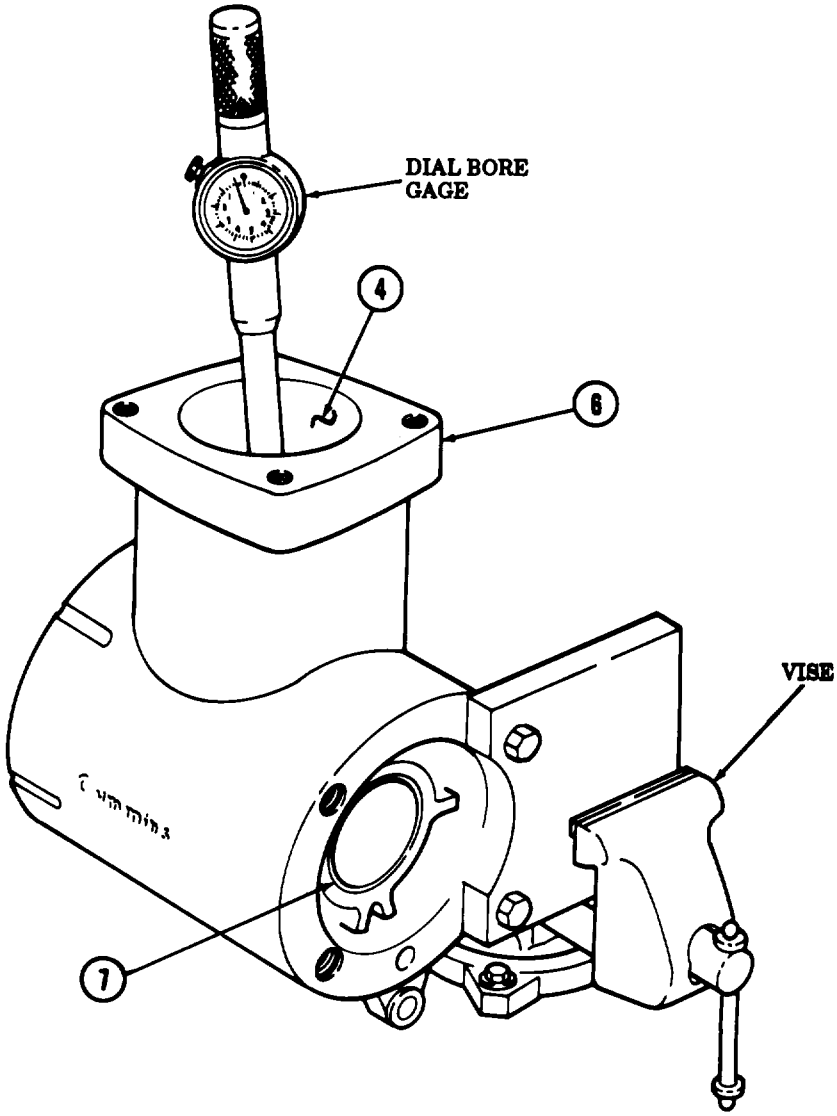

11-5. AIR COMPRESSOR REPAIR (Contd)

d. Assembly

1. Install mounting plate on crankcase (1) with two screws (2).
2. Position mounting plate and crankcase (1) in vise.

CAUTION

- If piston pin cannot be installed by hand pressure, heat piston in hot water to expand pin bore. Failure to do so may damage piston.
- Coat all metal parts with a thin film of oil prior to assembly.

3. position connecting rod (13) in piston (16).
4. Install one retaining ring (7) in piston pin groove (8) and install piston pin (9) into piston pin bore (14) and connecting rod (13).
5. Install second retaining ring (15) in piston pin groove (6).

NOTE

Compression rings and oil ring gaps must be installed 180° apart. If rings are not staggered 180°, leaks will develop during the compression stage resulting in decreased efficiency.

6. Install oil ring (5) in bottom piston groove (12).
7. Install compression ring (4) in the middle piston groove (11).

NOTE

Install compression ring marked “TOP” in step 8.

8. Install compression ring (3) in the top piston groove (10). It is the closest to the crown of the piston (16).

CAUTION

Do not force piston into cylinder. This can damage rings and/or cylinder wall.

9. Install ring compressor on piston and rod assembly (17).
10. Lubricate piston and rod assembly (17) with clean lubricating oil.
11. Install piston and rod assembly (17) into crankcase cylinder bore (18).
12. Install pipe plug (24) and key (25) on crankshaft (22).
13. Lubricate crankshaft journals (23) and thrust bearing (20) with clean lubricating oil.
14. Install crankshaft (22) in front support (21).
15. Install thrust bearing (20) on crankshaft (22).
16. Using arbor press, install drive gear (19) on crankshaft (22) with protruding edge on crankshaft (22).

11-5. AIR COMPRESSOR REPAIR (Contd)

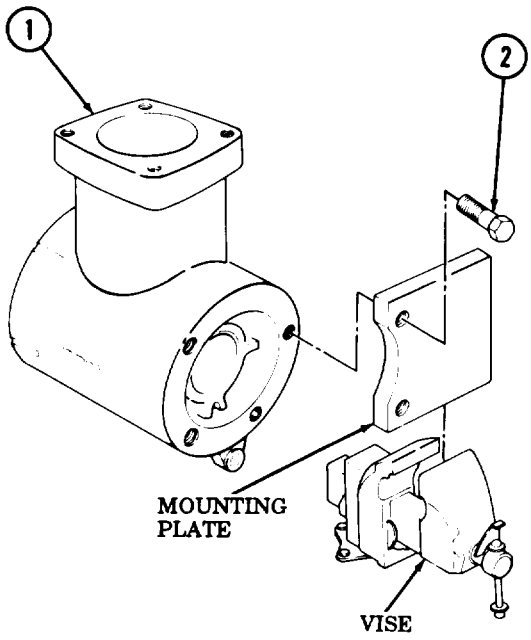

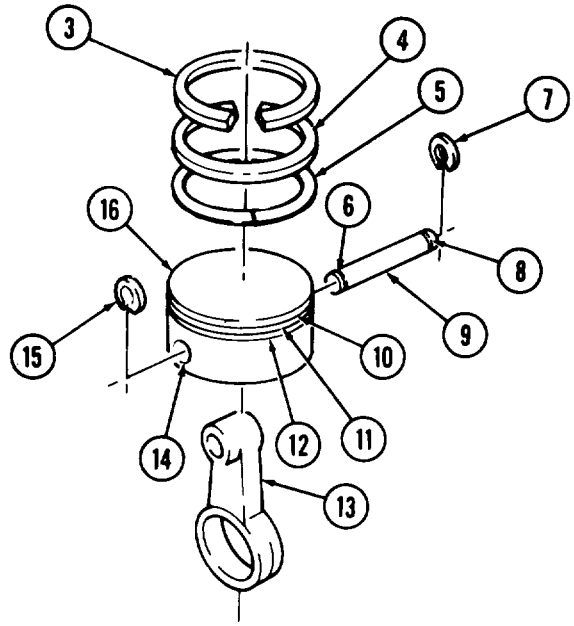

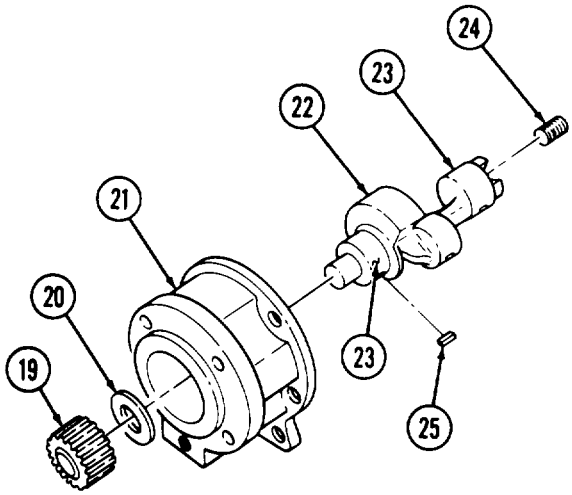

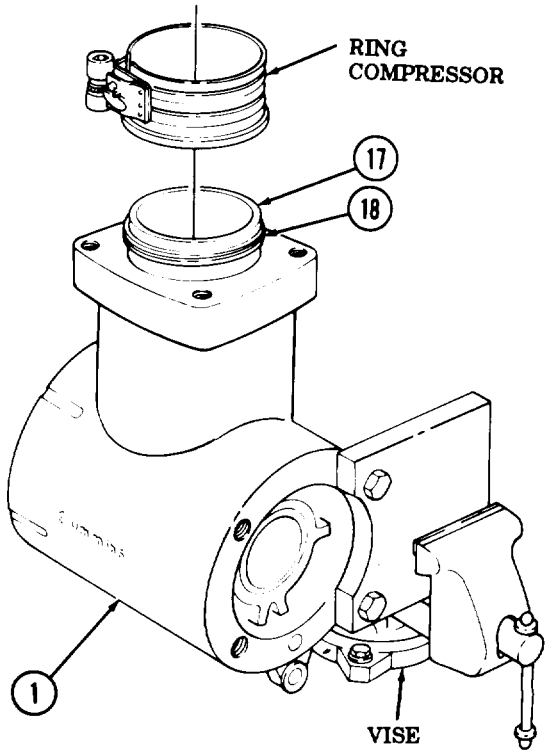

11-5. AIR COMPRESSOR REPAIR (Contd)

17. Install new gasket (3) over crankshaft (2).

NOTE

Before installing crankshaft in crankcase and connecting rod, piston must be 90° before or after top dead center (T.D.C.).

18. Install crankshaft (2), new gasket (3), and front support (1) on crankcase (4), connecting rod (6), and piston and rod assembly (6) with two screw-assembled washers (7) and four screw-assembled washers (8).
19. Install exhaust valve (13) and new preformed packings (10) and (12) on exhaust valve seat (11).
20. Install exhaust valve shim (15), exhaust valve spring (14), and exhaust valve seat (11) in cylinder head (17).
21. Install cylinder head (17) and new gasket (16) on crankcase (4).
22. Install cylinder head cover (19) and new gasket (18) on cylinder head (17) with four washers (20), new lockwashere (21), and screws (9).
23. Install new preformed packings (30) and (28), and unloader valve cap (29) on unloader valve body (24).
24. Install intake valve (31) on intake valve seat (32).
25. Install intake valve (23) and intake valve spring (26) in cylinder head cover (19).
26. Install unloader valve spring (25) and unloader valve (24) in cylinder head cover (19) with two flat washers (27) and screws (22).
27. Install new gasket (36) and air inlet connection (35) on cylinder head cover (19) with two washers (34), new lockwashers (33), and screws (38).
28. Remove mounting plate and crankcase (4) from vise.
29. Remove two screws (37) from mounting plate and crankcase (4).

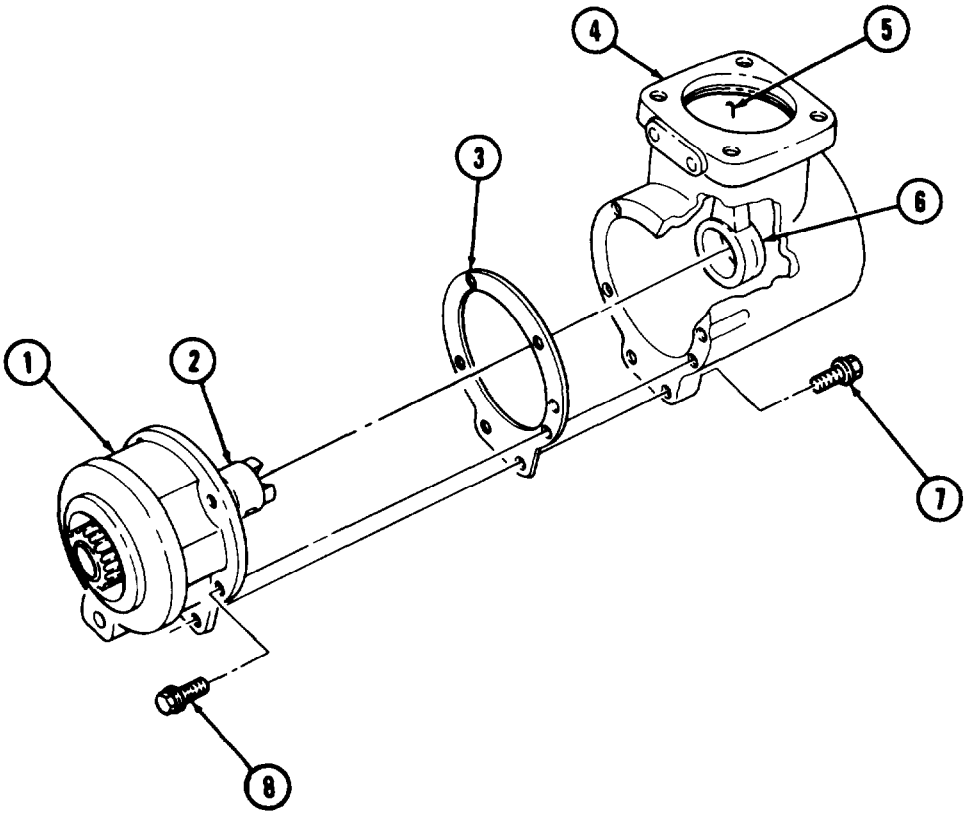

11-5. AIR COMPRESSOR REPAIR (Contd)

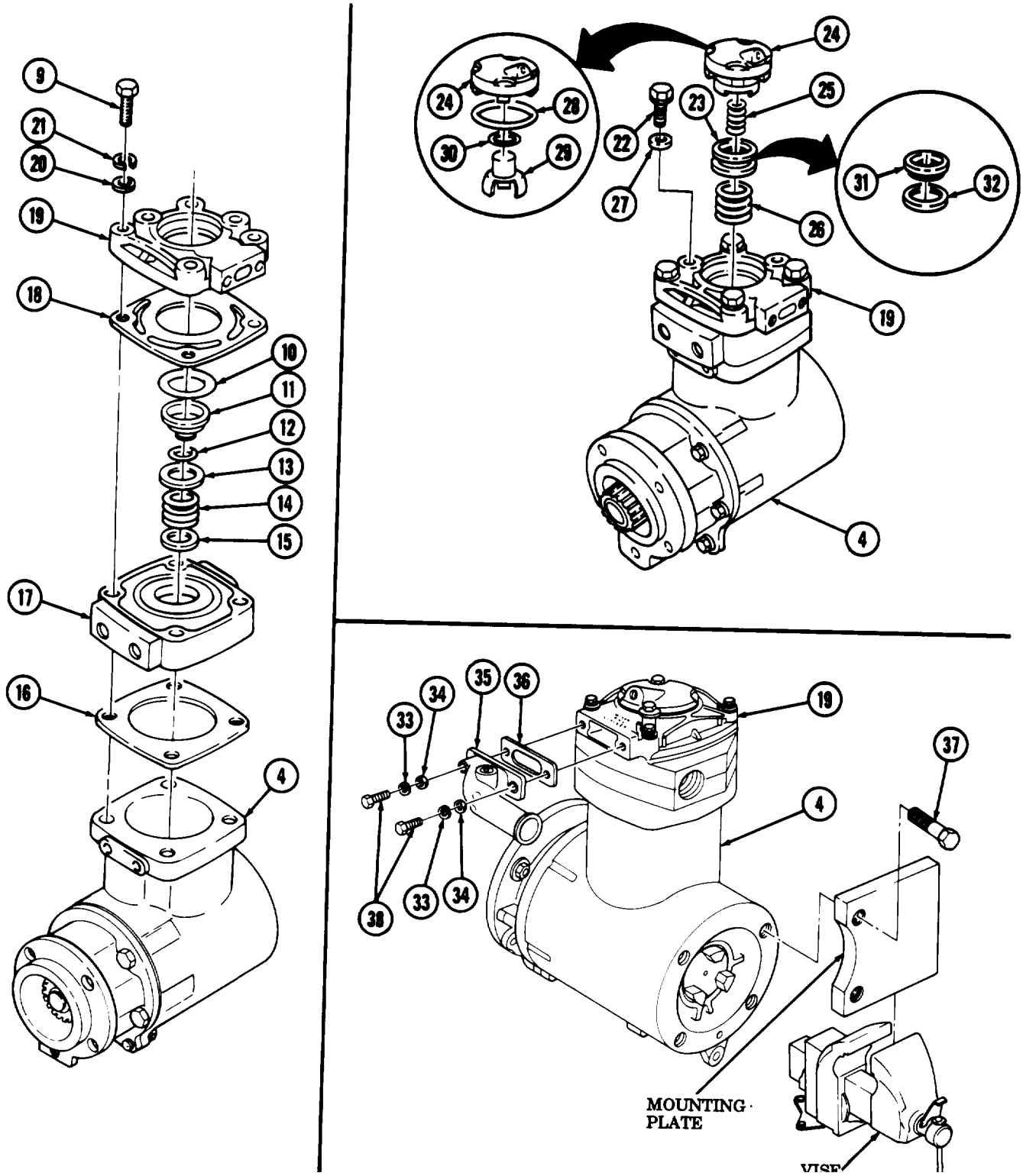

FOLLOW-ON TASK Install air compressor (para. 11-3).

11-6. PARKING AND SERVICE BRAKESHOE REPAIR

THIS TASK COVERS:

a. Parking Brakeshoe Disassembly
b. Service Brakeshoe Disassembly
c. Parking and Service Brakeshoe **Inspection and Repair**
d. Service Brakeshoe Assembly
e. Parking Brakeshoe Assembly

INITIAL SETUP

APPLICABLE MODELS
All

TOOLS
General mechanic's tool kit (Appendix B, Item 1)
Brake reliner (Appendix B, Item 6)
Arbor press (Appendix B, Item 7)

MATERIALS/PARTS
Two brake kits (Appendix D, Item 334)
Thirty-two rivets (Appendix D, Item 367)
Brake linings (Appendix D, Item 6)

REFERENCES (TM)
TM 9-2320-260-20
TM 9-2320-260-34 P-1
TM 9-4910-443-12

EQUIPMENT CONDITION
- Parking brakeshoes removed (TM 9-2320-260-20).
- Service brakeshoes removed (TM 9-2320-260-20).

CAUTION

All parking brakeshoe linings must be replaced as matched sets. Failure to do so may result in damage to equipment.

a. Parking Brakeshoe Disassembly

1. Remove four lubrication fittings (3) from brakeshoes (1) and (5).
2. Using brake reliner tool, remove sixteen rivets (2). Refer to TM 9-4910-443-12 for instructions on using brake reliner. Discard rivets (2).
3. Remove two linings (4) from brakeshoes (1) and (5). Discard linings (4).

CAUTION

Service brake linings must be maintained in sets of four. Do not intermix brake linings from different kits. Damage to equipment may result.

b. Service Brakeshoe Disassembly

1. Using arbor press, remove bushing (8) from brakeshoe (7).
2. Using brake reliner, remove sixteen rivets (2) from brakeshoe (7). Refer to TM 9-4910-443-12 for instructions on using reliner. Discard rivets (2).
3. Remove lining (6) from brakeshoe (7). Discard lining (6).

c. Parking and Service Brakeshoe Inspection and Repair

1. Inspect brakeshoes (1) and (5) for stripped or crossed threads. Repair stripped or crossed threads (para. 2-10).
2. Inspect brakeshoes (1) and (5) for cracks, warpage, flat spots on faces, and out-of-round rivet holes. Replace brakeshoes (1) or (5) if cracked, warped, flat, or holes are out-of-round (TM 9-2320-260-20).
3. Inspect brakeshoe (7) for cracks, warpage, flat spots on face, and out-of-round rivet holes. Replace brakeshoe (7) if cracked, warped, flat, or holes are out-of-round (TM 9-2320-260-20).

11-6. PARKING AND SERVICE BRAKESHOE REPAIR (Contd)

d. Service Brakeshoe Assembly

1. Using brake reliner, install lining (6) on brakeshoe (7) with sixteen rivets (2). Refer to TM 9-4910-443-10 for instructions on using brake reliner.
2. Using arbor press, install bushing (8) in brakeshoe (7).

e. Parking Brakeshoe Assembly

1. Place new lining (4) on brakeshoes (1) and (5).
2. Using brake reliner, install eight new rivets (2) on brakeshoes (1) and (5). Refer to TM 9-4910-443-10 for instructions on using brake reliner.
3. Install two lubrication fittings (3) on brakeshoes (1) and (5).

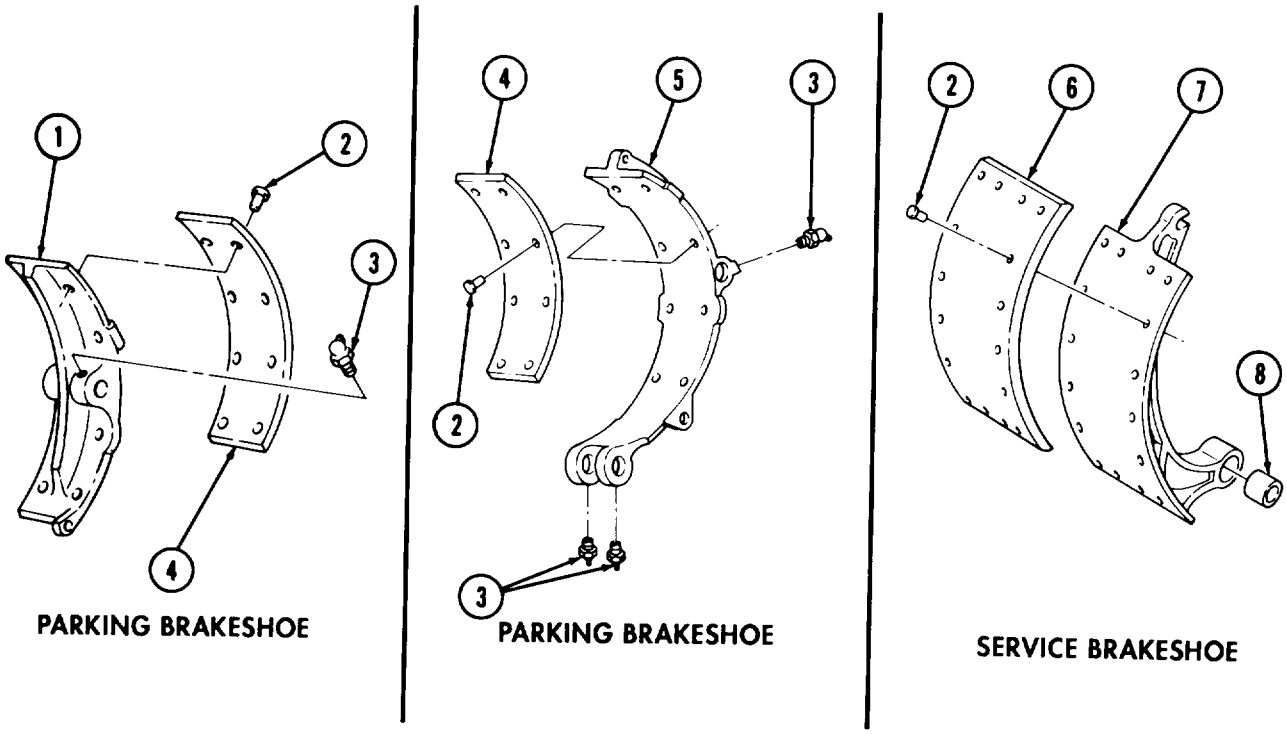

FOLLOW-ON TASK Install parking and service brakeshoes (TM 9-2320-260-20).

11-7. PARKING AND SERVICE BRAKEDRUM REPAIR

THIS TASK COVERS:

a. Cleaning **b. Inspection and Repair**

INITIAL SETUP

APPLICABLE MODELS
All

TOOLS
General mechanic's tool kit (Appendix B, Item 1)

MATERIALS/PARTS
Drycleaning solvent (Appendix C, Item 48)

REFERENCES (TM)
TM 9-2320-260-20
TM 9-2320-260-34P-1
TM 9-4910-482-10

EQUIPMENT CONDITIONS
Parking and service brakedrums removed (TM 9-2320-260-20).

GENERAL SAFETY INSTRUCTIONS
- Keep fire extinguisher nearby when using drycleaning solvent.
- Do not use compressed air or dry brush when working in areas of asbestos dust.
- Wear a filter mask or respirator when working around asbestos dust.

a. Cleaning

WARNING

- Do not use compressed air or dry brush for cleaning when working in areas where vehicle asbestos brake lining dust may accumulate. Remove asbestos dust and other residue from these areas using a soft bristle brush or cloth soaked with water. Breathing asbestos dust may cause injury to personnel.
- Drycleaning solvent is flammable and will not be used near open flame. Use only in well-ventilated places. Failure to do so may result in injury or death to personnel.

Wash parking or service brakedrum (1) or (2) with water and soft bristle brush. Allow to air dry. Clean with drycleaning solvent.

b. Inspection and Repair

1. Inspect parking and service brakedrums (1) and (2) for warps and cracks. Replace brakedrums (1) and/or (2) if warped or cracked.
2. Inspect parking and service brakedrums (1) and (2) for scores or pits. If scored or pitted, measure inside diameter. Replace parking brakedrum (1) if inside diameter is greater than 13.5 in. (342.9 mm). Replace service brakedrum (2) if inside diameter is greater than 16.625 in. (422.28 mm).
3. Resurface brakedrums (1) and/or (2) to remove scores and/or pits (TM 9-4910-482-10).
4. If parking (1) or service (2) brakedrums were resurfaced, measure inside diameter. Replace if measurement exceeds wear limits.

11-7. PARKING AND SERVICE BRAKEDRUM REPAIR (Contd)

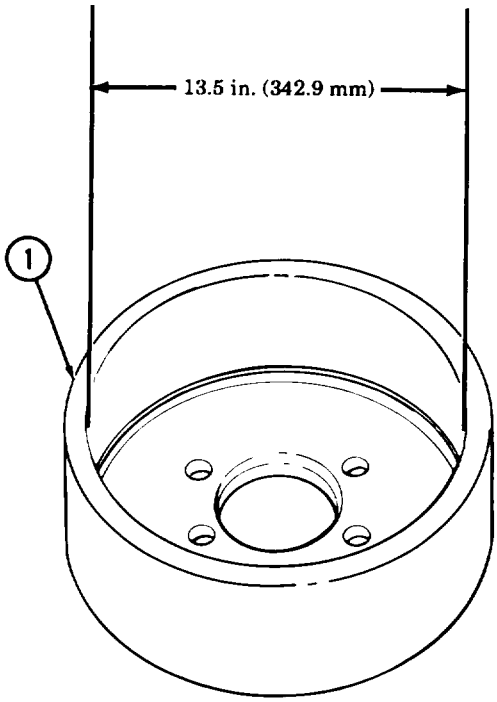

PARKING BRAKEDRUM

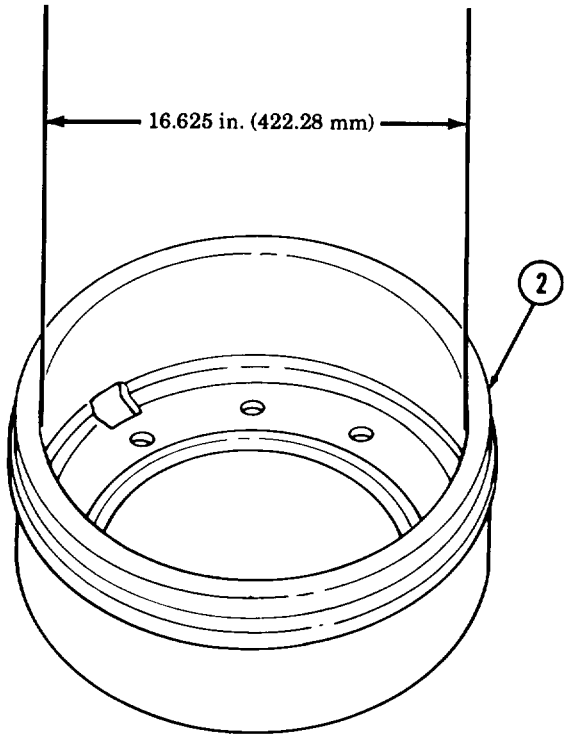

SERVICE BRAKEDRUM

FOLLOW-ON TASK Install parking and service brakedrums (TM 9-2320-260-20).

Section III. AIR-HYDRAULIC SYSTEM MAINTENANCE

11-8. SERVICE BRAKE PEDAL LEVER AND BRACKET MAINTENANCE

THIS TASK COVERS:

a. Removal
b. Cleaning and Inspection
c. Installation

INITIAL SETUP

APPLICABLE MODELS
All

TOOLS
General mechanic's tool kit (Appendix B, Item 1)
Arbor press (Appendix B, Item 7)

MATERIALS/PARTS
Five locknuts (Appendix D, Item 166)
Four locknuts (Appendix D, Item 191)
Cap and plug set (Appendix C, Item 6)
Antiseize tape (Appendix C, Item 50)

REFERENCES (TM)
TM 9-243
TM 9-2320-260-10
TM 9-2320-260-20
TM 9-2320-260-34P-1

EQUIPMENT CONDITION
- Wheels chocked (TM 9-2320-260-10).
- Floorboard tunnel removed (TM 9-2320-260-20).
- Brake pedal removed (TM 9-2320-260-20).
- Clutch pedal removed (TM 9-2320-260-20).
- Clutch actuating lever link rod assembly removed (TM 9-2320-260-20).
- Master cylinder removed (TM 9-2320-260-20).
- Transfer-to-front axle propeller shaft removed (TM 9-2320-260-20).
- Air reservoirs drained (TM 9-2320-260-10).

GENERAL SAFETY INSTRUCTIONS
- Drain air reservoir before disconnecting air lines.
- Eyeshields must be worn when removing hydraulic lines.

a. Removal

1. Remove screw (4) and locknut (3) from lever support (2) and main support bracket (5). Discard locknut (3).
2. Remove screw (1), locknut (14), and lever support (2) from frame (11). Discard locknut (14).
3. Remove screw (12), locknut (8), and bracket (9) from frame (11). Discard locknut (8).
4. Remove lubrication fittings (22) from main support bracket (5).

WARNING

- Eye protection is required when removing hydraulic lines. Failure to do so may result in injury to personnel.
- Drain air reservoirs before disconnecting air lines. Small parts under pressure may shoot out with high velocity, causing injury to personnel.

CAUTION

Cap or plug hydraulic lines after removal. Remove plugs prior to installation. Failure to do so may result in damage to equipment.

5. Remove hydraulic line (10) from tee (15).
6. Remove four locknuts (6), screws (13), two locknuts (7), and screws (16) from main support bracket (5) and frame (11). Discard locknuts (6) and (7).

11-8. SERVICE BRAKE PEDAL LEVER AND BRACKET MAINTENANCE (Contd)

7. Remove main support bracket (5) from frame (11).

NOTE

Do not remove bearing or bushings unless worn or damaged.

8. Remove tube (20) and bushings (19) and(21) from main support bracket (5). Discard bushings (19) and (21).
9. Remove actuating lever (17) from main support bracket (5).
10. Using arbor press, remove bearing (18) from actuating lever (17). Discard bearing (18).

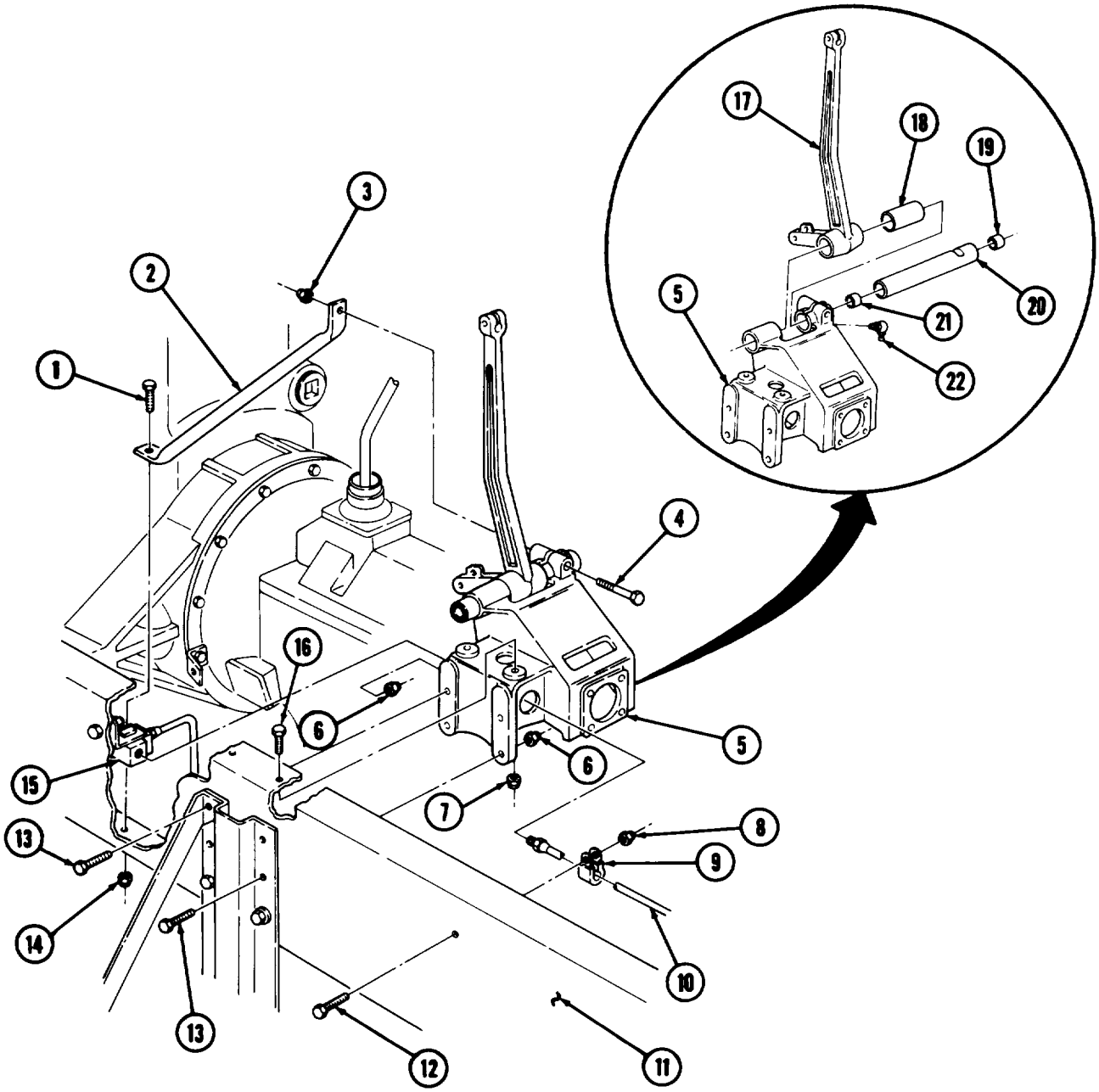

11-8. SERVICE BRAKE PEDAL LEVER AND BRACKET MAINTENANCE (Contd)

b. Cleaning and Inspection

1. For general cleaning instructions, refer to para. 2-8.
2. For general inspection instructions, refer to para. 2-9.

c. Installation

NOTE

Perform step 1 if bearing or bushings were removed.

1. Using arbor press, install new bushings (21) and (20) in main support bracket (5) and new bearing (18) in actuating lever (17).
2. Install actuating lever (17) on main support bracket (5). Aline lube hole in tube (19) with lube hole in main support bracket (5) and install tube (19) in main support bracket (5).
3. Install lubrication fittings (22) in main support bracket (5).
4. Position main support bracket (5) over end of hydraulic line (10) and install on frame (11) with four screws (13), new locknuts (6), two screws (16), and new locknuts (7).
5. Install hydraulic line (10) on tee (15).
6. Install bracket (9) on frame (11) with screw (12) and new locknut (8).
7. Install lever support (2) on frame (11) with screw (1) and new locknut (14).
8. Install liner support (2) on main support bracket (5) with screw (4) and new locknut (3).

11-8. SERVICE BRAKE PEDAL LEVER AND BRACKET MAINTENANCE (Contd)

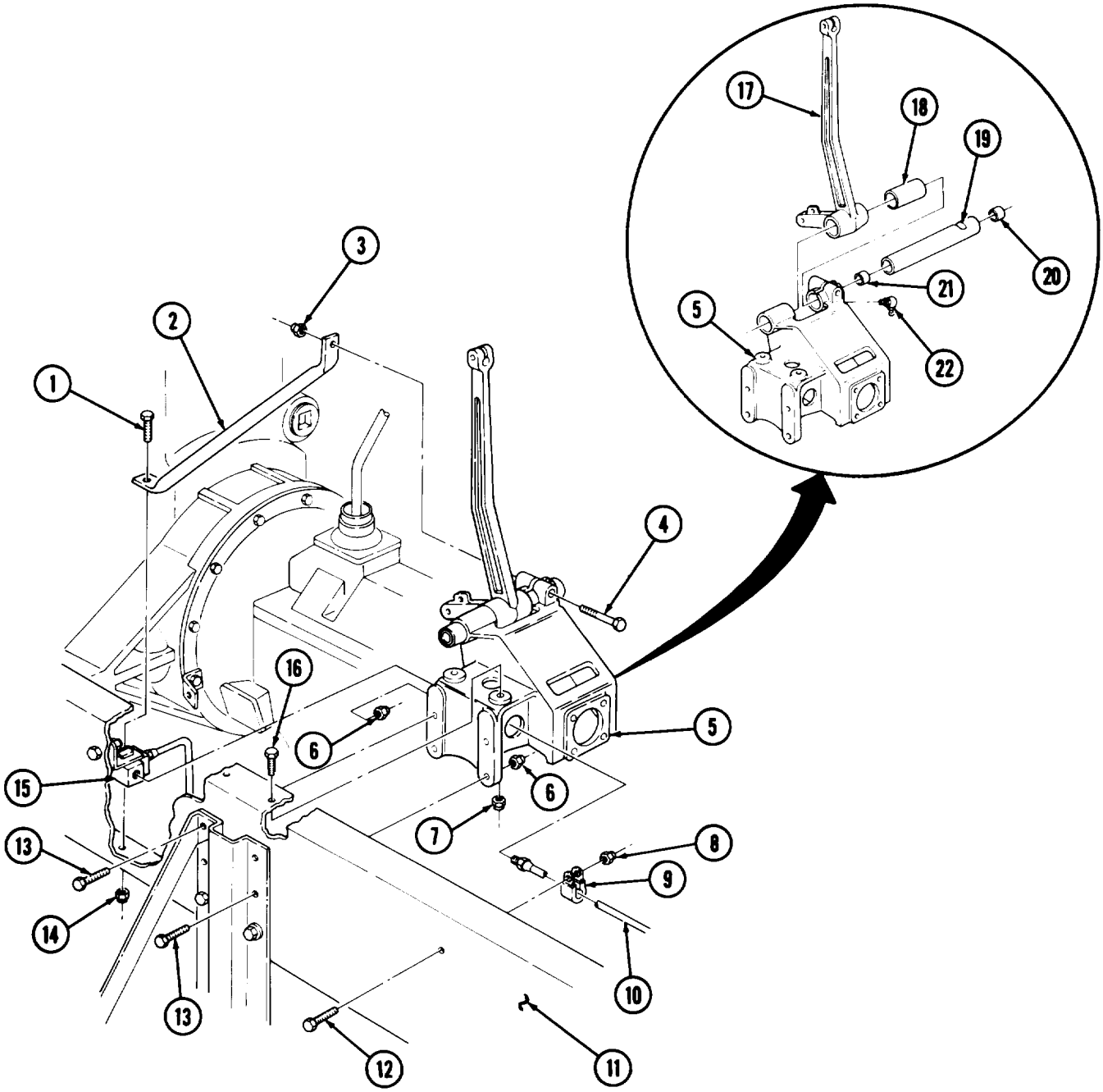

FOLLOW-ON TASKS:
- Install floorboard tunnel (TM 9-2320-260-20).
- Install brake pedal (TM 9-2320-260-20).
- Install clutch pedal (TM 9-2320-260-20).
- Install clutch actuating lever link rod assembly (TM 9-2320-260-20).
- Install master cylinder (TM 9-2320-260-20).
- Install transfer-to-front axle propeller shaft (TM 9-2320-260-20).

By Order of the Secretary of the Army:

GORDON R. SULLIVAN
General, United States Army
Chief of Staff

Official:

MILTON H. HAMILTON
Administrative Assistant to the
Secretary of the Army
07078

By Order of the Secretary of the Air Force:

MERRILL A. McPEAK
General, United States Air Force
Chief of Staff

RONALD W. YATES
General, United States Air Force
Commander Air Force Materiel Command
Command

Distribution:
To be distribution in accordance with DA Form 12-38-E (Block0244) requirements for TM9-2320-260-34-1

***U.S. GOVERNMENT PRINTING OFFICE: 1994-546-017/00155**

TEAR ALONG PERFORATED LINE

RECOMMENDED CHANGES TO EQUIPMENT TECHNICAL PUBLICATIONS

SOMETHING WRONG WITH THIS PUBLICATION?

THEN...JOT DOWN THE DOPE ABOUT IT ON THIS FORM, CAREFULLY TEAR IT OUT, FOLD IT AND DROP IT IN THE MAIL.

FROM: (PRINT YOUR UNIT'S COMPLETE ADDRESS)
B CO. 15TH FSB, 1CD
Ft. Hood TX 76545

DATE SENT 17 Nov 94

PUBLICATION NUMBER	PUBLICATION DATE	PUBLICATION TITLE
TM 9-2320-260-34-1		Direct Support and General Support Maintenance

BE EXACT PIN-POINT WHERE IT IS

PAGE NO	PARA-GRAPH	FIGURE NO	TABLE NO
5-21	5-9		

IN THIS SPACE TELL WHAT IS WRONG AND WHAT SHOULD BE DONE ABOUT IT:

Has the configuration changed to permit two screens for item 6?

SAMPLE

PRINTED NAME, GRADE OR TITLE, AND TELEPHONE NUMBER
Harold Kraft, Sgt.
AUTOVON 425-8023; Comm 287-8923

SIGN HERE Harold I. Kraft

DA FORM 1 JUL 79 2028-2

PREVIOUS EDITIONS ARE OBSOLETE.

P.S.—IF YOUR OUTFIT WANTS TO KNOW ABOUT YOUR RECOMMENDATION MAKE A CARBON COPY OF THIS AND GIVE IT TO YOUR HEADQUARTERS.

REVERSE OF DA FORM 2028-2

SAMPLE

FILL IN YOUR
UNIT'S ADDRESS

FOLD BACK

TEAR ALONG PERFORATED LINE

DEPARTMENT OF THE ARMY

B Co. 15th FSB, 1CD

Ft. Hood TX 76545

OFFICIAL BUSINESS
PENALTY FOR PRIVATE USE $300

Commander
US Army Tank-Automotive Command
ATTN: AMSTA-MB
Warren, MI 48397-5000

TEAR ALONG PERFORATED LINE

RECOMMENDED CHANGES TO EQUIPMENT TECHNICAL PUBLICATIONS

SOMETHING WRONG WITH THIS PUBLICATION?

THEN...JOT DOWN THE DOPE ABOUT IT ON THIS FORM, CAREFULLY TEAR IT OUT, FOLD IT AND DROP IT IN THE MAIL.

FROM: (PRINT YOUR UNIT'S COMPLETE ADDRESS)

DATE SENT

PUBLICATION NUMBER	PUBLICATION DATE	PUBLICATION TITLE
TM 9-2320-260-34-1	25 July 1994	Direct Support and General Support Maintenance

BE EXACT PIN-POINT WHERE IT IS

PAGE NO	PARA-GRAPH	FIGURE NO	TABLE NO

IN THIS SPACE TELL WHAT IS WRONG AND WHAT SHOULD BE DONE ABOUT IT:

PRINTED NAME, GRADE OR TITLE, AND TELEPHONE NUMBER

SIGN HERE

DA FORM 1 JUL 79 2028-2

PREVIOUS EDITIONS ARE OBSOLETE.

P.S.—IF YOUR OUTFIT WANTS TO KNOW ABOUT YOUR RECOMMENDATION MAKE A CARBON COPY OF THIS AND GIVE IT TO YOUR HEADQUARTERS.

REVERSE OF DA FORM 2028-2

FILL IN YOUR
UNIT'S ADDRESS

FOLD BACK

DEPARTMENT OF THE ARMY

OFFICIAL BUSINESS
PENALTY FOR PRIVATE USE $300

Commander
US Army Tank-Automotive Command
ATTN: AMSTA-MB
Warren, MI 48397-5000

TEAR ALONG PERFORATED LINE

TEAR ALONG PERFORATED LINE

RECOMMENDED CHANGES TO EQUIPMENT TECHNICAL PUBLICATIONS

SOMETHING WRONG WITH THIS PUBLICATION?

THEN...JOT DOWN THE DOPE ABOUT IT ON THIS FORM, CAREFULLY TEAR IT OUT, FOLD IT AND DROP IT IN THE MAIL.

FROM: (PRINT YOUR UNIT'S COMPLETE ADDRESS)

DATE SENT

PUBLICATION NUMBER	PUBLICATION DATE	PUBLICATION TITLE
TM 9-2320-260-34-1	25 July 1994	Direct Support and General Support Maintenance

BE EXACT PIN-POINT WHERE IT IS

PAGE NO	PARA-GRAPH	FIGURE NO	TABLE NO

IN THIS SPACE TELL WHAT IS WRONG AND WHAT SHOULD BE DONE ABOUT IT:

PRINTED NAME, GRADE OR TITLE, AND TELEPHONE NUMBER

SIGN HERE

DA FORM 1 JUL 79 2028-2

PREVIOUS EDITIONS ARE OBSOLETE.

P.S.—IF YOUR OUTFIT WANTS TO KNOW ABOUT YOUR RECOMMENDATION MAKE A CARBON COPY OF THIS AND GIVE IT TO YOUR HEADQUARTERS.

REVERSE OF DA FORM 2028-2

FILL IN YOUR
UNIT'S ADDRESS

FOLD BACK

TEAR ALONG PERFORATED LINE

DEPARTMENT OF THE ARMY

OFFICIAL BUSINESS
PENALTY FOR PRIVATE USE $300

Commander
US Army Tank-Automotive Command
ATTN: AMSTA-MB
Warren, MI 48397-5000

TEAR ALONG PERFORATED LINE

RECOMMENDED CHANGES TO EQUIPMENT TECHNICAL PUBLICATIONS

SOMETHING WRONG WITH THIS PUBLICATION?

THEN...JOT DOWN THE DOPE ABOUT IT ON THIS FORM, CAREFULLY TEAR IT OUT, FOLD IT AND DROP IT IN THE MAIL.

FROM: (PRINT YOUR UNIT'S COMPLETE ADDRESS)

DATE SENT

PUBLICATION NUMBER	PUBLICATION DATE	PUBLICATION TITLE
TM 9-2320-260-34-1	25 July 1994	Direct Support and General Support Maintenance

BE EXACT PIN-POINT WHERE IT IS

PAGE NO	PARA-GRAPH	FIGURE NO	TABLE NO

IN THIS SPACE TELL WHAT IS WRONG AND WHAT SHOULD BE DONE ABOUT IT:

PRINTED NAME, GRADE OR TITLE, AND TELEPHONE NUMBER

SIGN HERE

DA FORM 1 JUL 79 2028-2

PREVIOUS EDITIONS ARE OBSOLETE.

P.S.—IF YOUR OUTFIT WANTS TO KNOW ABOUT YOUR RECOMMENDATION MAKE A CARBON COPY OF THIS AND GIVE IT TO YOUR HEADQUARTERS.

REVERSE OF DA FORM 2028-2

FILL IN YOUR
UNIT'S ADDRESS

FOLD BACK

TEAR ALONG PERFORATED LINE

DEPARTMENT OF THE ARMY

OFFICIAL BUSINESS
PENALTY FOR PRIVATE USE $300

Commander
US Army Tank-Automotive Command
ATTN: AMSTA-MB
Warren, MI 48397-5000

THE METRIC SYSTEM AND EQUIVALENTS

LINEAR MEASURE

1 Centimeter = 10 Millimeters = 0.01 Meters = 0.3937 Inches
1 Meter = 100 Centimeters = 1000 Millimeters = 39.37 Inches
1 Kilometer = 1000 Meters = 0.621 Miles

WEIGHTS

1 Gram = 0.001 Kilograms = 1000 Milligrams = 0.035 Ounces
1 Kilogram = 1000 Grams = 2.2 lb.
1 Metric Ton = 1000 Kilograms = 1 Megagram = 1.1 Short Tons

LIQUID MEASURE

1 Milliliter = 0.001 Liters = 0.0338 Fluid Ounces
1 Liter = 1000 Milliliters = 33.82 Fluid Ounces

SQUARE MEASURE

1 Sq. Centimeter = 100 Sq. Millimeters = 0.155 Sq. Inches
1 Sq. Meter = 10,000 Sq. Centimeters = 10.76 Sq. Feet
1 Sq. Kilometer = 1,000,000 Sq. Meters = 0.386 Sq. Miles

CUBIC MEASURE

1 Cu. Centimeter = 1000 Cu. Millimeters = 0.06 Cu. Inches
1 Cu. Meter = 1,000,000 Cu. Centimeters = 35.31 Cu. Feet

TEMPERATURE

5/9(°F - 32) = °C
212° Fahrenheit is evuivalent to 100° Celsius
90° Fahrenheit is equivalent to 32.2° Celsius
32° Fahrenheit is equivalent to 0° Celsius
9/5C° + 32 =°F

APPROXIMATE CONVERSION FACTORS

TO CHANGE	TO	MULTIPLY BY
Inches	Centimeters	2.540
Feet	Meters	0.305
Yards	Meters	0.914
Miles	Kilometers	1.609
Square Inches	Square Centimeters	6.451
Square Feet	Square Meters	0.093
Square Yards	Square Meters	0.836
Square Miles	Square Kilometers	2.590
Acres	Square Hectometers	0.405
Cubic Feet	Cubic Meters	0.028
Cubic Yards	Cubic Meters	0.765
Fluid Ounces	Milliliters	29.573
Pints	Liters	0.473
Quarts	Liters	0.946
Gallons	Liters	3.785
Ounces	Grams	28.349
Pounds	Kilograms	0.454
Short Tons	Metric Tons	0.907
Pound-Feet	Newton-Meters	1.356
Pounds per Square Inch	Kilopascals	6.895
Miles per Gallon	Kilometers per Liter	0.425
Miles per Hour	Kilometers per Hour	1.609
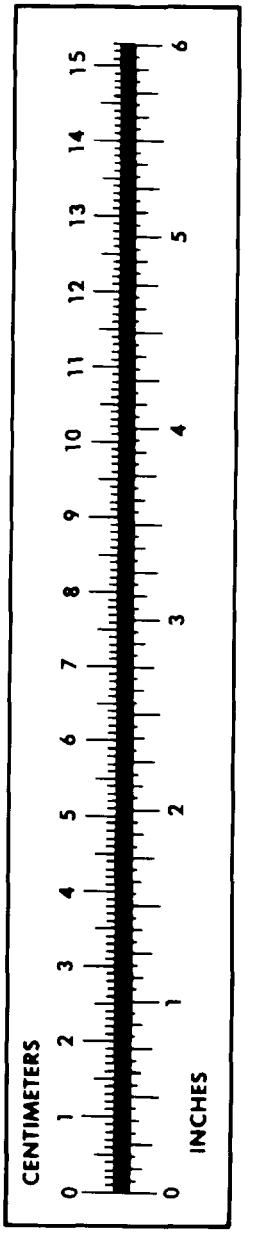
TO CHANGE	TO	MULTIPLY BY
Centimeters	Inches	0.394
Meters	Feet	3.280
Meters	Yards	1.094
Kilometers	Miles	0.621
Square Centimeters	Square Inches	0.155
Square Meters	Square Feet	10.764
Square Meters	Square Yards	1.196
Square Kilometers	Square Miles	0.386
Square Hectometers	Acres	2.471
Cubic Meters	Cubic Feet	35.315
Cubic Meters	Cubic Yards	1.308
Milliliters	Fluid Ounces	0.034
Liters	Pints	2.113
Liters	Quarts	1.057
Liters	Gallons	0.264
Grams	Ounces	0.035
Kilograms	Pounds	2.205
Metric Tons	Short Tons	1.102
Newton-Meters	Pounds-Feet	0.738
Kilopascals	Pounds per Square Inch	0.145
Kilometers per Liter	Miles per Gallon	2.354
Kilometers per Hour	Miles per Hour	0.621